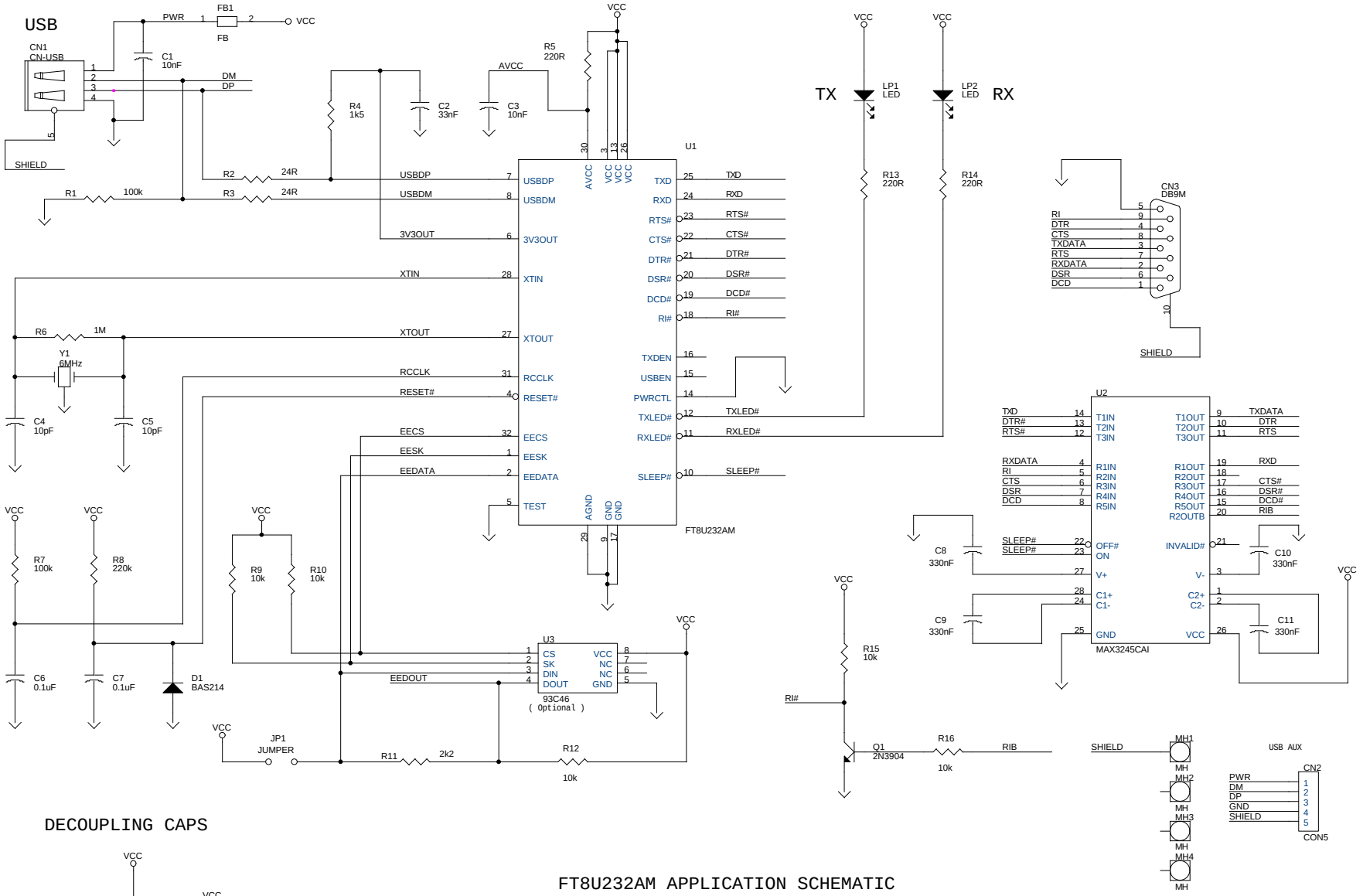

DECOUPLING CAPS

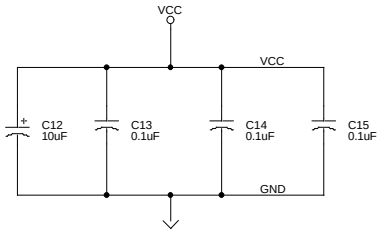

FT8U232AM APPLICATION SCHEMATIC

ULTRABAUD USB <=> RS232 SERIAL CONVERTER (300 to 920k baud)

DEMONSTRATION BOARD

DEMO232, 17th August 2000