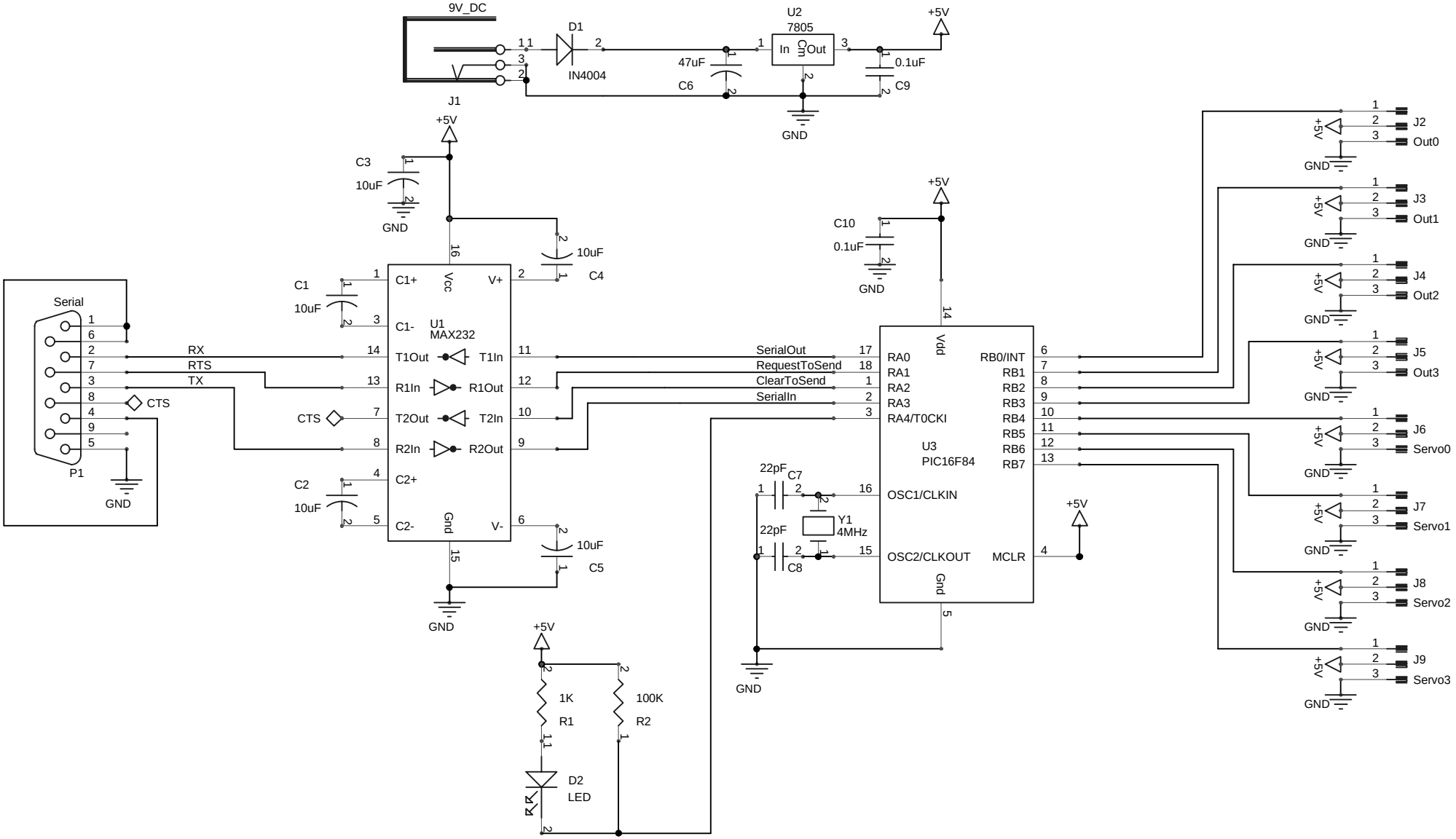
9V_DC
J1
D1
IN4004
47uF
C6
U2
7805
In
Out
Com
0.1uF
C9
+5V
GND
C3
10uF
C4
C1
C2
C5
U1
MAX232
C1+
C1-
C2+
C2-
Vcc
Gnd
V+
V-
T1Out
T1In
R1In
R1Out
T2Out
T2In
R2In
R2Out
Serial
P1
RX
RTS
TX
CTS
SerialOut
RequestToSend
ClearToSend
SerialIn
C10
0.1uF
U3
PIC16F84
Vdd
Gnd
RA0
RA1
RA2
RA3
RA4/T0CKI
RB0/INT
RB1
RB2
RB3
RB4
RB5
RB6
RB7
OSC1/CLKIN
OSC2/CLKOUT
MCLR
22pF
C7
C8
Y1
4MHz
1K
R1
100K
R2
D2
LED
J2
Out0
J3
Out1
J4
Out2
J5
Out3
J6
Servo0
J7
Servo1
J8
Servo2
J9
Servo3