VISTA G

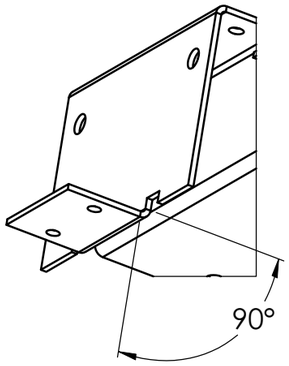

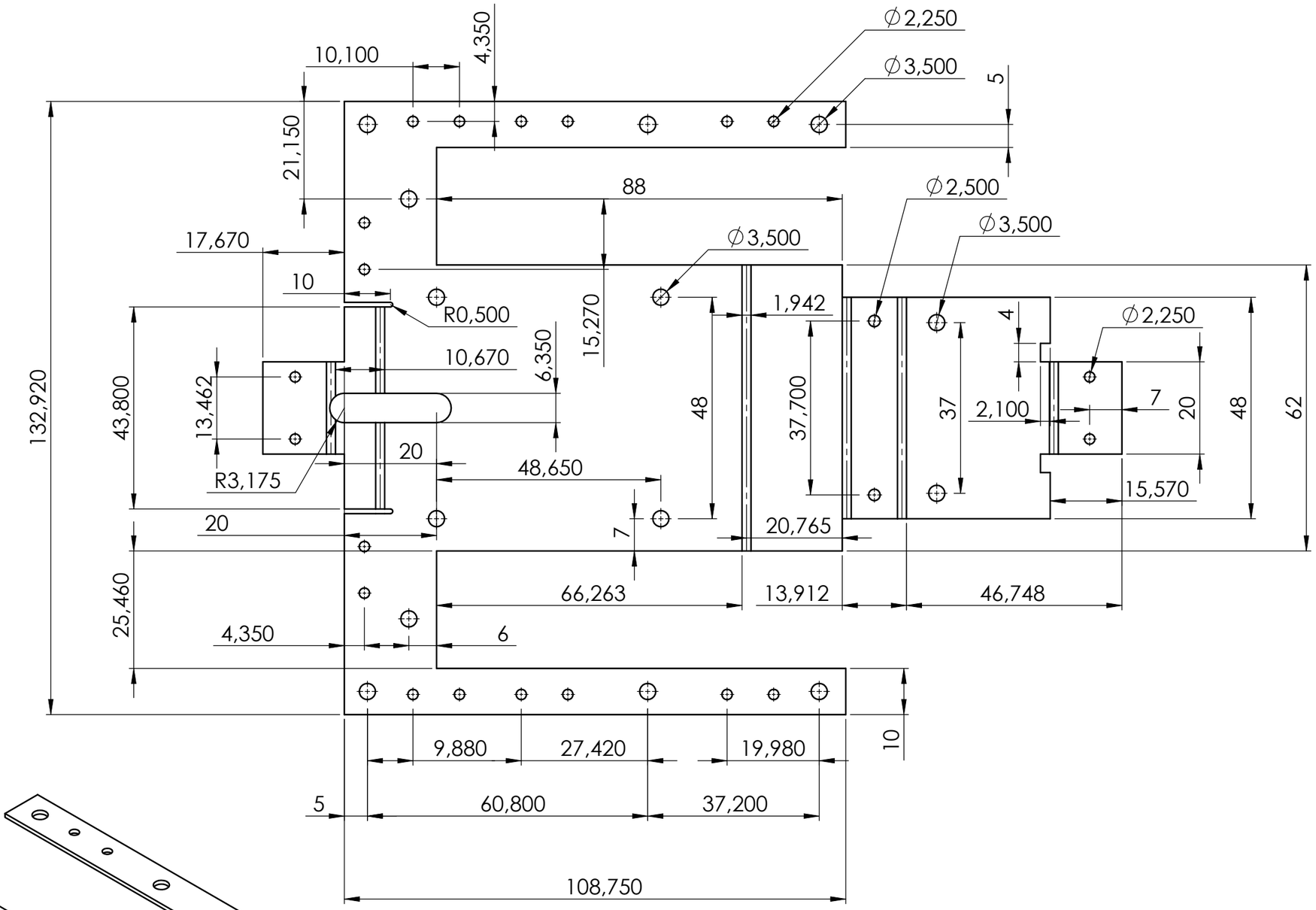

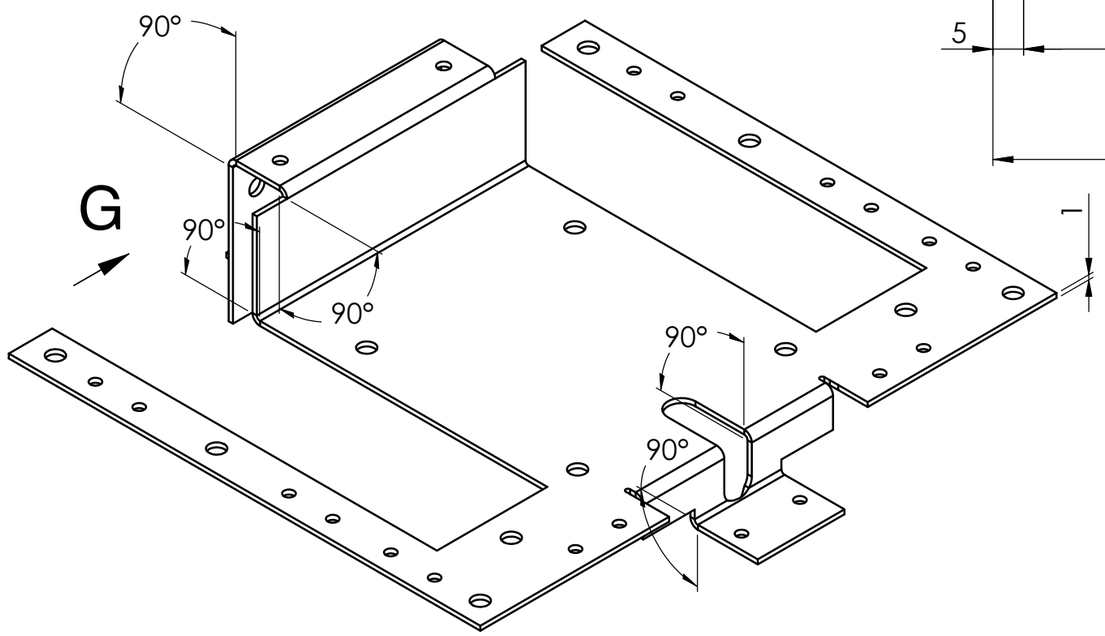

UNLESS OTHERWISE SPECIFIED: DIMENSIONS ARE IN MILLIMETERS SURFACE FINISH: TOLERANCES: LINEAR: ANGULAR:	FINISH:			DEBUR AND BREAK SHARP EDGES	DO NOT SCALE DRAWING	REVISION
	NAME	SIGNATURE	DATE		TITLE: Base do chassi	
DRAWN						
CHK'D						
APPV'D						
MFG						
Q.A				MATERIAL: Alumínio	DWG NO. B1	A3
				WEIGHT:	SCALE: 1:1	SHEET 1 OF 1