The Drive & Control Company

Rexroth
Bosch Group

Basic Mechanic Elements

13.1

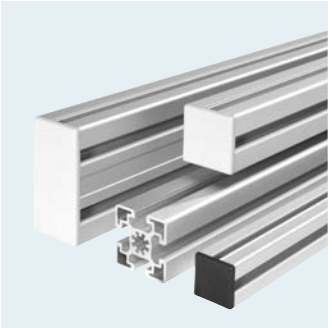

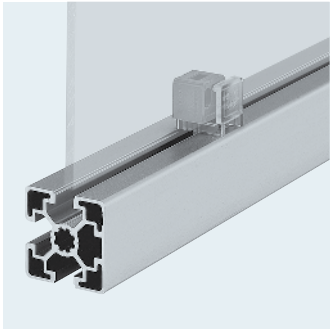

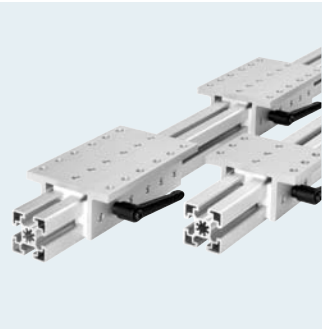

Explanations

Presentation	Explanation
40x40 HR / **L** (mm) / **No.** 1 units / 50 ... 6000 / **3 842 993 256 / L** 1 units M12 M12 / 110 ... 6000 / **3 842 993 257 / L** 20 units / 6070 / **3 842 529 381**	Product available for delivery as: – Single component of variable length, e.g. Order: 1 x 3 842 993 257 / 785 Delivery: 1x 40x40 HR with M12 profile finishing on both sides, L = 785 mm – Delivery unit (: here 20 units) of fixed length, e.g. Order: 1x 3 842 529 381 Delivery: 20x 40x40 HR (without profile finishing), L = 6070 mm M12 M12 Notes on profile finishes, see Section 2.
50/50 / **Slot** / **ESD** / **No.** Bracket (standard) / 10 / 20 / **3 842 530 381**	The product is delivered in packaging units (: in this case 20 units); i.e. the order quantity must at least equal the specified quantity or a multiple of it; differing quantities will be rounded up Order examples: – Order: 1x 3 842 530 381 – delivery: 20 x bracket 50/50 – Order: 20 x 3 842 530 381 – delivery: 20 x bracket 50/50 – Order: 30 x 3 842 530 381 – delivery: 40 x bracket 50/50
Threaded sleeve / **No.** / **3 842 504 790**	For order tables without the column, the following applies: = 1 Order examples: – Order: 1 x 3 842 504 790 – delivery: 1x threaded sleeve incl. fastening material (FS) enclosed with the product for peripheral mounting
6 8 10	1. Profile with slot width 6 mm, 8 mm, 10 mm; all modular dimensions 2. Accessories suitable for mounting on profiles with the specified slot width; all modular dimensions
10 10 40 / 10 10 45 / 10 10 50 / 10 10 60	1. Profile with slot width 10 mm; modular dimensions: 40 mm, 45 mm, 50 mm, 60 mm 2. Accessories suitable for mounting on profiles with the specified slot width and modular dimensions
ESD	Conductive material version in accordance with DIN EN 61340-5-1; suitable for use in ESD-sensitive areas
Clean Room	Suitable for use in cleanrooms
	Profile finishing required (drilling, thread cutting, milling)
	The centering tab can be broken off for offset assembly or assembly at an angle to the profile slot.
	Screw with Torx profile
	Weight
F_{max}	Permitted loading (N)

Uncompromisingly flexible: the assembly system from its inventor

Work environments are more efficient the more they are customized for their specific purpose. From frames, enclosures, special and series-production machinery and ESD-conductive systems to workstations or lines for material supply and linking, Bosch Rexroth's ultra-flexible assembly system offers quick, complete solutions for any tasks in any industry.

First introduced by Bosch over 30 years ago, today our modular system encompasses well over 1500 parts. The idea is attractively simple: the system is based on aluminum profiles with an "endless" longitudinal slot.

With systematic enhancements, customer-oriented services and comprehensive service support, including free-of-charge planning software, our modular system offers everything you need for efficient working environments.

Introduction	**1**
Strut profiles	**2**
Connection elements	**3**
Joints	**4**
Air-supply elements	**5**
Feet and wheels	**6**
Support of surface elements	**7**
Doors and fittings	**8**
Accessories for protective devices	**9**
Protective devices and partition walls EcoSafe	**10**
Installation elements	**11**
Elements for manual movement	**12**
Linear guides	**13**
Tools	**14**
FiFo station	**15**
Components for lateral guides	**16**
Components for ESD applications	**17**
Proximity switches and switch brackets	**18**
Technical data	**19**
Material Number Overview	**20**
Index	**21**

The Rexroth modular system – safe, reliable and customized

Use our extensive range of products to save working time and costs effectively.

- Short planning timescales
- Quicker assembly
- Highly flexible conversion and extension options
- Ready-to-use, corrosion-protected surfaces
- Reusable components
- Worldwide availability

The versatile comprehensive range

Over 100 different profile cross-sections with perfectly adjusted modular dimensions as well as versatile connection elements and accessories enable you to turn any idea into reality.

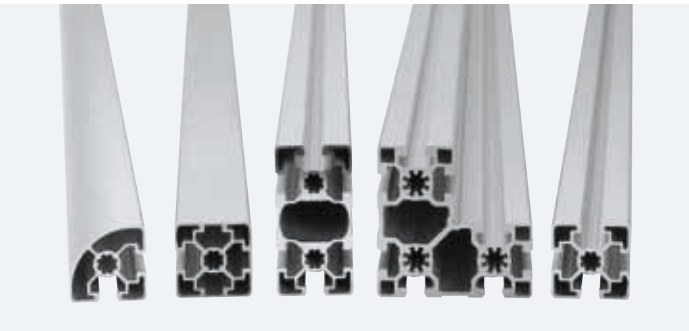

Strong profiles – the economical choice for any load scenario!

- Light profiles
- Heavy-duty standard profiles
- Profiles with closed slots
- Round profiles for an attractive design
- Innovative special profiles for special applications

Sturdy connecting systems – the Rexroth connectors hold really firmly and securely!

- Brackets
- Joints
- Cubic connectors
- Bolt connectors
- Quick connectors
- ...

Matching accessories for the profile system – easy to fix in the profile slot or central hole!

- Hinges, sliders
- Clamping elements
- Feet and rollers
- Installation and air-supply elements
- Cover and mounting rim profiles
- ...

Application-oriented solutions for all sectors

A convincing concept for providing solutions for all sectors, from the automotive industry to safety equipment, logistics, automation, electronics or exhibition stand construction.

Maximum planning certainty due to professional, worldwide network

Comprehensive experience, in-depth know-how and reliable production capacities ensure timely and speedy supply.

Reliable worldwide availability

- Dealers, systems providers and regional and national subsidiaries are always near at hand for you – worldwide
- Highly efficient central warehouse in Stuttgart
- Local warehouses at Rexroth sites
- 'Made to measure' production capacities

On-time, speedy supply

- All components available
- Pre-assembled modules, complete frames
- Prompt delivery and excellent adherence to deadlines

Professional point of contact

- Personalized advice
- Comprehensive services
- Local sales partners
- Highly skilled experts

Find your point of contact within the Rexroth Sales and Service organization at the click of a mouse:
www.boschrexroth.com/adressen-dcl

Specific planning, efficient building, versatile use

Bosch Rexroth's high-performance aluminum modular system allows you to create secure, complete and transparent solutions for improving work productivity.

Secure

- Strong profiles which withstand strong forces
- Well designed connecting systems
- Anti-torsion elements and positioning aids
- All systems ESD-conductive
- Guaranteed performance data

Reliable

- Standardized components
- Low planning workload
- Systematically matched elements
- Short assembly times with few tools needed
- Durable and corrosion-resistant

Customized

- For all sectors
- Reusable components
- Scalable/extendable
- For technical and design solutions
- Can be combined with transfer systems, Varioflow, Manual Production Systems, MGE linear guides, EcoSafe
- Quick & Easy customized finishing

MT*pro* – planning software

Unlimited combination options together with simple planning and ordering as well as excellent adherence to deadlines allow you to achieve perfect results.

This especially user-friendly software speeds up and simplifies the planning of application-specific frames, enclosures and workstations. The entire ordering process can also be done in next to no time. And the data can be transferred to your CAD or VR (Virtual Reality) environment via a CAD interface.

- Complete product info.
- CAD library
- Quick & Easy configurator
- Profile deflection calculation
- Conversion of profile drawings
- Quick and simple planning in the layout designer

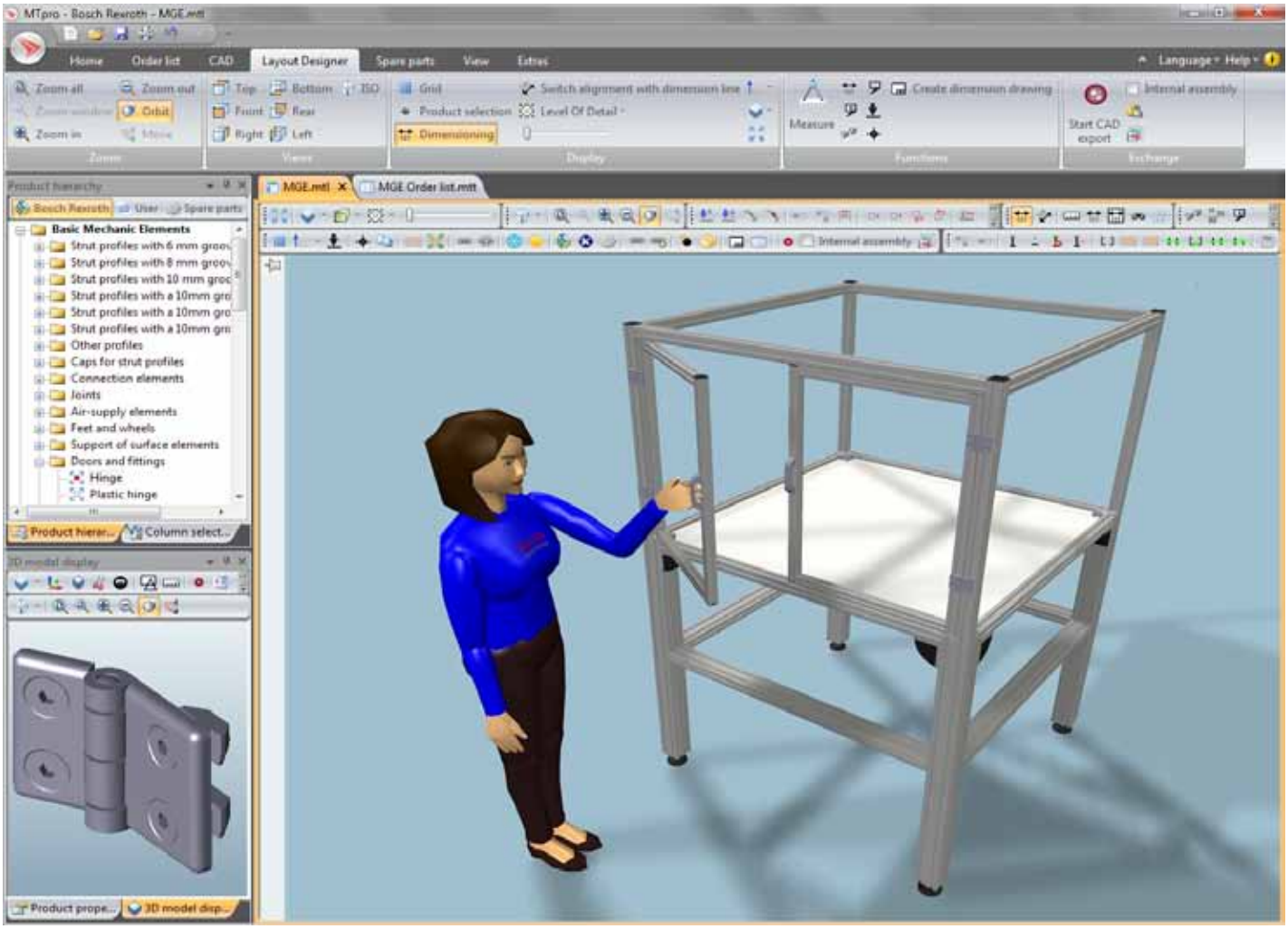

You can find further assembly systems products in the following catalogs

Many years of experience, robust products and innovative technology are the hallmarks of Bosch Rexroth's assembly systems. You can find more information on our products in our product catalogs (www.boschrexroth.de/mediadirectory) and on our webpages.

Catalog: 3842540392
www.boschrexroth.de/mediadirectory

Manual Production Systems (MPS)
The key concern in modern production operations is the avoidance of waste. Bosch Rexroth's MPS Manual Production Systems have been developed in strict adherence to lean production principles. They make the planning and implementation of lean production facilities both simple and quick.

Catalog: R999000401
www.boschrexroth.de/mediadirectory

VarioFlow *plus*
With its VarioFlow *plus* system Rexroth offers you a high-performance, standardized and versatile conveyor system for use in the food & packaging and the healthcare fields as well as in automotive & electronic assembly lines and machine linking applications.

Catalog: 3842531138
www.boschrexroth.de/mediadirectory

TS 2*plus*
As well as a range of conveyor media including polyamide belts, toothed belts, flat top chains and accumulation roller chains, TS 2*plus* offers a wealth of specific modular units in the curve, cross conveyor, positioning and drive units field.

Strut profiles

Strut profiles, 6 mm slot,
20 mm modular dimension
(p. 2-11)

Strut profiles, 8 mm slot,
30 mm modular dimension
(p. 2-16)

Strut profiles, 10 mm slot,
40 mm modular dimension
(p. 2-24)

Strut profiles, 10 mm slot,
45 mm modular dimension
(p. 2-35)

Strut profiles, 10 mm slot,
50 mm modular dimension
(p. 2-49)

Strut profiles, 10 mm slot,
60 mm modular dimension
(p. 2-51)

Rectangular tube (p. 2-53)
Clamping profile (p. 2-54)

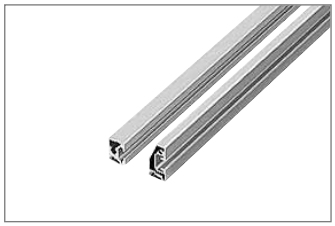

Frame profile 22.5x30 (p. 2-55)
22.5x45 (p. 2-56)

Angle profile (p. 2-57)
Suspension profile (p. 2-58)
Container mount (p. 2-59)

Slotted plate (p. 2-60)

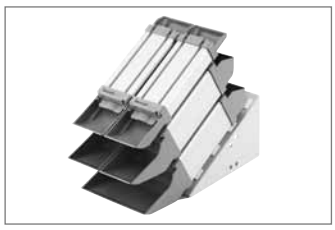

Material chute (p. 2-61)

Profile rail (p. 2-63)

Profiles for installing
conveyor media (p. 2-64)

D28 round tube (p. 2-67)
Strut profile D28x55 (p. 2-67)

EcoShape tubular framing
system (p. 2-70)

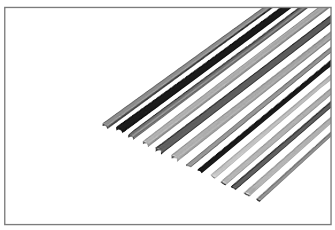

Cover profiles, additional
accessories (p. 2-81)

Strut profiles

With more than 100 strut profiles for all types of loading, Bosch Rexroth AG offers the widest product range for different demands:

- Square and rectangular profiles
- Light profiles with optimized cross-sections
- Round profiles and profiles with smooth lateral surfaces

Connectors with high load-bearing capacities, combined with ultra robust slots and large central bores, enable profile connections equipped to handle high static and dynamic loads.

Bosch Rexroth AG offers you 6 different profile ranges. All profiles within one profile range have the same slot dimensions and spacing to ensure perfect coordination during construction.
Due to their high degree of robustness, the 10 mm slotted profiles are suitable for constructions ranging from tables to heavy machine frames. They are available in four profile series with a slot spacing of 40 mm, 45 mm, 50 mm, or 60 mm.

The profiles with 8 mm and 6 mm slots are used in the construction of lightweight equipment, partition walls, stands, or showcases.

Profile length in profile packaging units ( )
The stated length of the profile packaging units relates to the guaranteed usable length.
During anodizing as part of the manufacturing process bare areas which are approx. 30 mm long are left at each end of the profile (= contact areas), so the profiles are generally supplied incorporating an excess length of 100 mm.

Example:

45x45L	**L** (mm)	**No.**
20 pcs	5600	**3 842 511 702**

Note: The length dimension “L” in the table equals the usable length, whereas the actual length is approx. 100 mm longer.

Strut profiles – slot sizes and modular dimensions

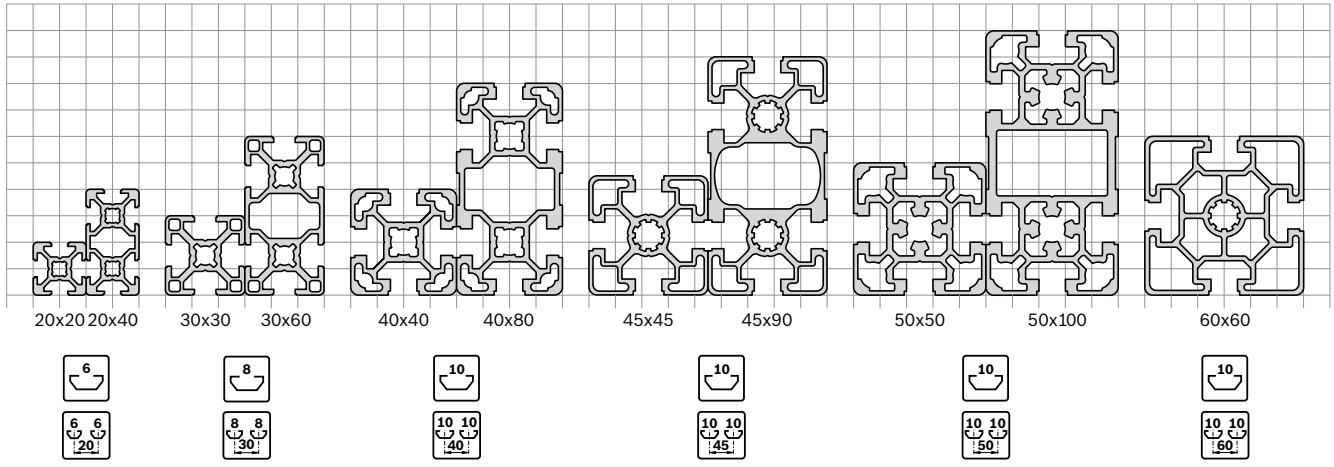

00111714

Strut profiles – slot sizes and modular dimensions

6 mm slot, 20 mm modular dimension

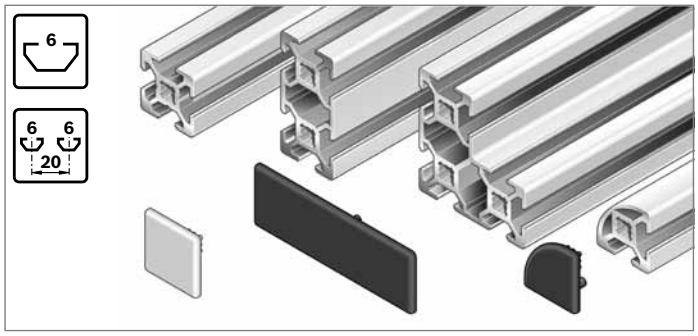

8 mm slot, 30 mm modular dimension

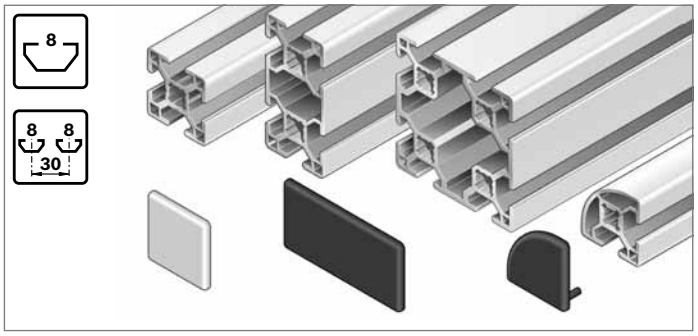

10 mm slot, 40 mm modular dimension

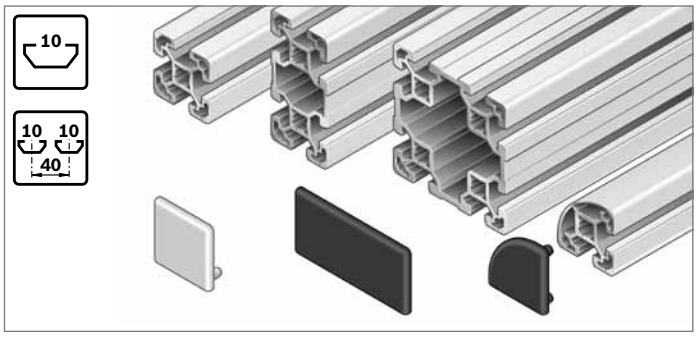

10 mm slot, 45 mm modular dimension

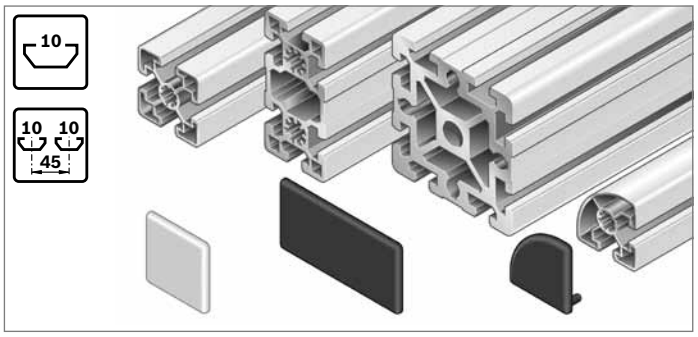

10 mm slot, 50 mm modular dimension

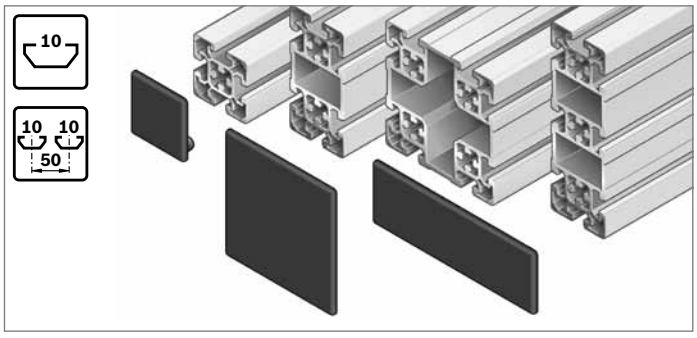

10 mm slot, 60 mm modular dimension

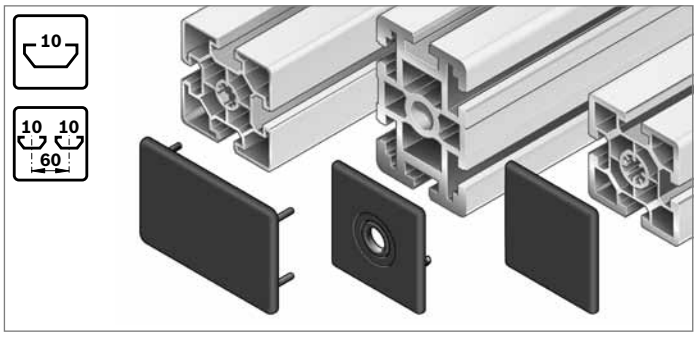

Technical data – profiles

Profile		Slot	Profile surface	Moment of inertia		Section modulus		Torsion index		Mass	Page
			A (cm²)	I_x (cm⁴)	I_y (cm⁴)	W_x (cm³)	W_y (cm³)	I_t (cm⁴)	W_t (cm³)	**m** (kg/m)	
20x20		6	1.6	0.7	0.7	0.7	0.7	0.08	0.17	0.4	2-12
20x20 1N		6	1.9	0.8	0.8	0.8	0.8	0.60	0.67	0.5	2-12
20x20 2N		6	1.8	0.7	0.8	0.7	0.8	0.31	0.52	0.5	2-12
20x20 2NVS		6	1.8	0.7	0.7	0.7	0.7	0.37	0.52	0.5	2-13
20x20 3N		6	1.7	0.7	0.8	0.7	0.7	0.19	0.34	0.5	2-13
20x20 R		6	1.6	0.6	0.6	0.5	0.5	0.21	0.39	0.4	2-13
20x40		6	2.9	4.6	1.2	2.5	1.4	0.68	0.91	0.8	2-14
20x60		6	3.5	14.2	1.7	4.7	1.7	2.30	2.00	0.9	2-14
20x40x40		6	4.2	6.0	6.0	2.6	2.6	1.50	1.30	1.1	2-14
10x40		6	2.1	3.2	0.2	1.6	0.4	–	–	0.6	2-15
30x30		8	3.1	2.8	2.8	1.8	1.8	0.29	0.33	0.9	2-17
30x30 1N		8	3.7	3.1	3.5	2.0	2.3	2.80	1.50	1.0	2-17
30x30 2N		8	3.5	2.8	3.5	2.1	2.7	1.50	1.20	1.0	2-17
30x30 2NVS		8	3.5	3.1	3.1	2.0	2.0	1.70	1.10	1.0	2-18
30x30 3N		8	3.3	3.1	2.8	2.3	2.2	0.86	0.73	0.9	2-18
30x30°		8	3.7	3.5	3.6	2.0	1.9	1.50	2.00	1.0	2-17
30x45°		8	4.0	3.6	5.1	2.1	2.3	2.10	2.40	1.1	2-19
30x60°		8	3.6	3.1	4.1	1.7	1.9	1.50	2.00	1.0	2-19
30x30 R		8	2.9	2.3	2.3	1.4	1.4	0.81	1.20	0.8	2-19
30x60		8	5.5	19.6	5.1	7.0	3.9	2.60	2.10	1.5	2-20
30x60 4N		8	5.8	20.2	5.5	6.7	3.8	4.80	2.40	1.6	2-20
30x60x60		8	8.2	26.2	26.2	7.6	7.6	6.40	3.60	2.2	2-20
30x90		8	7.7	60.7	7.3	13.5	4.9	5.10	3.80	2.1	2-21
30x120		8	9.9	136.3	9.6	22.7	6.4	7.60	5.60	2.7	2-21
30x45		8/10	4.0	8.1	3.9	3.9	2.9	1.30	1.30	1.1	2-22
60x60 8N		8	9.8	39.7	39.7	13.2	13.2	19.30	6.80	2.6	2-22
11x20		8	1.0	0.5	0.1	0.7	0.3	–	–	0.3	2-22
15x120		8	9.0	110.4	2.2	18.4	2.7	–	–	2.4	2-23
40x40L		10	5.6	9.1	9.1	4.5	4.5	1.30	0.74	1.5	2-26
40x40L 0N		10	6.3	10.4	10.4	5.2	5.2	10.70	4.30	1.7	2-27
40x40L 1N		10	6.1	9.8	10.4	4.8	5.2	6.90	3.70	1.7	2-26
40x40L 2N		10	6.0	9.0	10.3	4.5	5.2	4.00	3.00	1.6	2-27
40x40L 2NVS		10	6.0	9.7	9.7	4.9	4.9	4.50	2.70	1.6	2-27
40x40L 3N		10	5.8	9.7	9.0	4.8	4.5	2.60	1.70	1.6	2-27
40x30°		10	6.2	9.4	11.8	4.7	5.9	3.00	3.10	1.7	2-37
40x45°		10	6.8	9.9	16.6	5.0	8.3	4.20	3.70	1.8	2-28
40x60°		10	6.3	8.7	13.1	4.3	6.5	3.00	3.10	1.7	2-28
40x40L R		10	5.0	7.2	7.2	3.6	3.6	2.50	2.00	1.3	2-29
40x40 HR		10	5.5	8.1	7.6	4.0	3.6	4.60	2.80	1.5	2-29

Profile		Slot	Profile surface	Moment of inertia		Section modulus		Torsion index		Mass	Page
			A (cm²)	I_x (cm⁴)	I_y (cm⁴)	W_x (cm³)	W_y (cm³)	I_t (cm⁴)	W_t (cm³)	**m** (kg/m)	
40x80L		10	9.9	63.4	17.3	15.9	8.7	8.02	4.80	2.7	2-30
40x80L 4N		10	10.4	65.2	19.1	16.3	9.9	13.30	4.40	2.8	2-30
40x80L 3NVS		10	10.6	67.8	19.0	17.0	9.5	15.90	5.20	2.9	2-35
40x80x80L		10	15.4	96.6	96.6	24.2	24.2	19.60	9.80	4.2	2-31
40x120L		10	15.5	203.2	27.8	33.9	13.9	17.20	10.00	4.2	2-31
40x160L		10	20.5	466.7	37.2	58.3	18.6	25.80	14.60	5.5	2-32
80x80L		10	18.2	132.1	132.1	33.0	33.0	59.80	17.20	4.9	2-32
80x80L 4NVS		10	19.3	142.5	142.5	35.6	35.6	92.00	16.80	5.2	2-33
80x80L 6N		10	18.8	134.1	140.9	33.5	36.2	72.60	15.00	5.1	2-33
40x120x120L	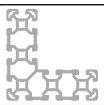	10	24.6	318.0	318.0	42.2	42.2	37.10	19.00	6.7	2-33
80x120L		10	25.6	389.2	192.8	64.9	48.2	119.00	29.10	6.9	2-34
80x160L		10	32.9	850.7	253.4	106.3	63.4	182.00	41.10	8.9	2-34
45x45L		10	6.0	11.7	11.7	5.2	5.2	1.46	0.75	1.6	2-35
45x45L 0N		10	6.7	13.5	13.5	6.0	6.0	16.20	6.10	1.8	2-35
45x45L 1N		10	6.5	12.6	13.5	5.5	6.0	10.00	5.20	1.8	2-36
45x45L 2N		10	6.4	11.6	13.5	5.2	6.0	5.50	4.30	1.7	2-36
45x45L 2NVS		10	6.4	12.6	12.6	5.6	5.6	6.30	3.80	1.7	2-36
45x45L 3N		10	6.2	12.6	11.7	5.4	5.2	3.40	2.40	1.7	2-37
45x30°		10	6.9	12.7	15.2	5.0	5.3	6.60	5.70	1.9	2-37
45x45°		10	7.6	13.4	21.4	5.2	6.4	9.00	6.80	2.0	2-37
45x60°		10	6.8	11.4	16.9	4.4	5.2	6.80	4.30	1.8	2-38
45x45L R		10	4.9	8.6	8.6	5.0	5.0	3.30	2.80	1.3	2-38
45x45HR		10	6.6	11.0	10.7	4.4	4.8	7.60	3.40	1.8	2-38
45x45		10	7.5	13.8	13.8	6.1	6.1	2.65	0.96	2.0	2-39
45x60		10	11.0	37.2	22.7	12.4	10.1	6.70	4.09	3.0	2-40
45x90SL		10	9.0	73.4	18.1	16.3	8.0	8.57	4.00	2.4	2-40
45x90L		10	11.3	82.0	23.6	18.2	10.5	15.10	4.40	3.0	2-41
45x90L 2N		10	12.0	85.6	26.9	38.1	6.0	31.70	7.70	3.2	2-41
45x90L 3NVS		10	11.8	87.2	25.2	38.8	5.6	25.70	6.60	3.2	2-41
45x90		10	15.4	124.6	32.8	27.7	14.6	15.40	6.61	4.2	2-42
45x180		10	25.5	766.7	57.3	85.2	25.5	44.40	17.00	6.9	2-42

Profile		Slot	Profile surface	Moment of inertia		Section modulus		Torsion index		Mass	Page
			A (cm²)	I_x (cm⁴)	I_y (cm⁴)	W_x (cm³)	W_y (cm³)	I_t (cm⁴)	W_t (cm³)	**m** (kg/m)	
45x270		10	61.9	3962.0	118.0	300.2	61.6	–	–	16.7	2-43
45x90x90L		10	21.2	152.1	152.1	19.1	32.6	34.90	11.60	5.7	2-43
45x90x90L 4 N		10	22.1	160.8	160.8	30.6	30.6	65.30	17.20	5.95	2-44
90x90SL		10	14.1	130.2	130.2	28.9	28.9	42.50	13.90	3.8	2-44
90x90L		10	24.1	211.1	211.1	46.9	46.9	82.10	20.10	6.5	2-44
90x90L 4N		10	24.2	227.4	214.7	50.5	47.7	122.00	22.20	6.5	2-45
90x90L 4NVS		10	24.2	220.9	220.9	49.2	49.2	127.00	22.00	6.5	2-45
90x90		10	38.4	299.8	299.8	66.7	66.7	118.60	26.00	10.4	2-45
90x180L	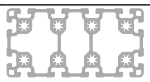	10	42.8	1380.0	401.0	153.3	89.1	257.00	47.10	11.6	2-46
90x180	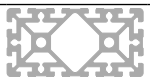	10	63.6	2138.3	544.3	237.6	121.0	429.00	64.00	17.2	2-46
90x360	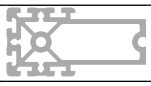	10	90.2	14065.0	710.0	781.4	157.7	937.10	117.60	24.4	2-43
15x22.5		10	1.3	0.8	0.3	0.9	0.6	–	–	0.3	2-47
15x180		10	11.6	321.7	3.2	35.7	4.2	–	–	3.1	2-48
22.5x45		10	4.7	7.1	2.9	3.2	2.6	–	–	1.3	2-48
22.5x180		10	21.6	581.0	11.8	66.8	14.7	–	–	5.8	2-48
50x50L		10	9.3	21.2	21.2	8.5	8.5	5.37	4.30	2.5	2-49
50x100L		10	17.2	162.8	42.6	32.6	17.0	29.43	10.70	4.6	2-49
50x150L		10	25.8	540.0	64.2	72.0	25.7	52.10	20.50	6.9	2-50
100x100L		10	29.9	318.3	318.3	63.7	63.7	153.53	31.40	8.1	2-50
100x200L	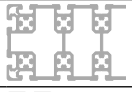	10	54.0	2133.1	602.1	213.3	120.4	421.00	75.70	14.6	2-51
60x60L		10	9.6	32.4	32.4	10.8	10.8	13.20	8.70	2.6	2-51
60x60		10	14.4	52.2	52.2	17.4	17.4	15.90	8.80	3.9	2-52
60x90		10	25.8	214.2	90.5	47.6	30.2	45.80	18.00	7.0	2-52

Profile		Slot	Profile surface	Moment of inertia		Section modulus		Torsion index		Mass	Page
			A (cm^2)	I_x (cm^4)	I_y (cm^4)	W_x (cm^3)	W_y (cm^3)	I_t (cm^4)	W_t (cm^3)	**m** (kg/m)	
50x50 Rectangular tube		10	4.5	15.1	15.1	5.7	5.7	–	–	1.2	2-53
Frame profile 22.5x30		10	3.2	1.7	3.0	1.5	2.0	–	–	0.9	2-55
Frame profile 22.5x45		10	3.4	6.7	1.7	2.8	1.3	–	–	0.9	2-56
Angle profile		10	4.5	8.8	6.9	3.2	2.3	–	–	1.2	2-57
Suspension profile		10	2.0	2.0	0.5	2.7	0.3	–	–	0.6	2-58
30x100 L/R Slotted plate		10	9.7	88.8	9.2	17.8	6.0	–	–	2.6	2-60
30x100 M Slotted plate		10	9.7	88.8	9.2	17.8	6.0	–	–	2.6	2-60
Profile rail 30x45C		10	4.4	10.3	5.6	4.2	3.7	–	–	1.2	2-63
U-profile		10	4.4	10.4	8.3	4.6	4.1	–	–	1.2	2-64
SP 2/R		8	5.2	4.3	11.7	2.4	5.2	–	–	1.4	2-64
SP 2/B		10	10.4	49.6	25.8	12.1	11.5	–	–	2.8	2-65
SP 2/B-50		8/10	6.9	16.1	16.9	5.3	7.5	–	–	1.9	2-65
SP 2/B-100		10	11.9	95.1	30.4	20.0	13.5	–	–	3.2	2-65
SP 2/BH		10	12.4	53.7	28.6	14.0	13.8	–	–	3.3	2-66
SP 4/R		10	26.1	222.0	95.5	84.9	16.4	–	–	3.5	2-66
D28			2.4	1.5	1.5	1.1	1.1	–	–	0.7	2-68
D28x55			5.9	3.2	88.3	2.3	32.1	–	–	1.6	2-69
D28L			1.8	1.3	1.3	1.0	1.0	–	–	0.5	2-72
D28L; N10			2.6	1.2	2.0	0.8	1.4	–	–	0.7	2-72
Section profile MV45x45		10	6.2	11.8	10.5	5.3	4.7	–	–	1.7	12-28
30x30 WG30		8	3.2	2.5	3.0	1.6	1.9	–	–	0.9	10-9
30x30 WG40		8	3.2	2.4	2.9	1.5	1.8	–	–	0.9	10-9
30x45 WG30		8	4.5	7.3	4.2	3.2	2.7	–	–	1.2	10-9
30x45 WG40		8	4.5	6.9	4.1	4.3	1.8	–	–	1.2	10-9

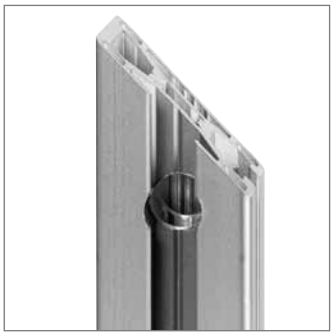

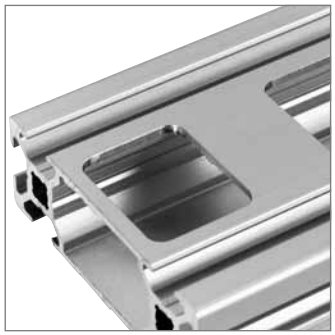

Profile finishing

Profile finishing is required whenever interlocking connectors are used. Bores must be added for bolt connectors or threads cut in central bores, for example. This requires machining with standard dimensions. However, individual customer requirements can only be satisfied by customized profile finishes for all points along the profile.
Rexroth enables even these complex requirements to be met as standard. This is because we offer three options for ordering the right profile finishes:

Example: 40x40L

3 842 993 126 / 255 D17 D17V

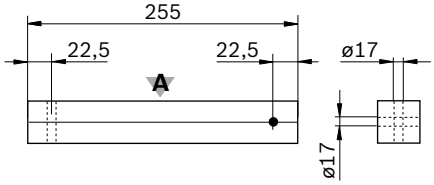

00133799

Standard profile finishes with fixed material numbers
For certain profiles, you can receive selected profile finishes with a fixed material number. This is the easiest way to order the appropriate profile finish for our proven interlocking profile connectors.
The available profile finishes are shown in pictograms in the order tables.

Example: 40x40L 2N

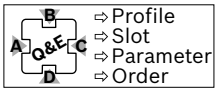

3 842 993 720 / 255 /
A=D17/-; B=-/D17

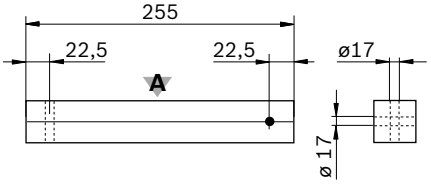

00133800

Quick & Easy – standard profile finishes
All profile finishes with standard dimensions: available for all profiles thanks to simple configuration with Quick & Easy.
For more information on the available profile finishes, see the fold-out section at the end of the catalog.

Example: 20x60

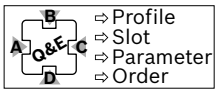

3 842 993 698 / 255 /
[B=DI; PS=58; OS=20;DM=9,8]

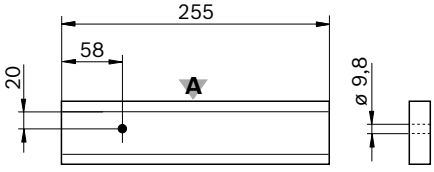

00133801

Quick & Easy – individual profile finishes
Get the greatest possible flexibility in defining your profile finishes. Individual finishing options can be achieved in virtually any combination and nearly every point along the profile.
For more information, see the fold-out section at the end of the catalog.

eShop and MT*pro* – software tools for designers, planners, and purchasers

Quick & Easy is supported by Rexroth's eShop and the MT *pro* profile configurator.

We offer:

- Customer-friendly configurations
- Generation of 3D CAD models for designers
- Drawings at the press of a button
- Integration of frames/profiles in layouts
- Easy ordering at the click of a mouse

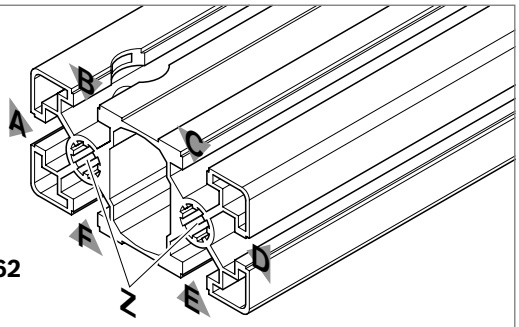

45x90L
3 842 993 662

3 842 993 662	/ 393	/ B = D17/-
Material number	Length	Standard finish D17 through-hole in slot B

Quick & Easy – four steps for simple ordering

The type of profile finishing is defined in an order key; all finishes for a profile can be summarized in one order key.

1. Select profile cross-section and length
2. Specify slot for finishing:
all profile slots are identified with letters (A, B, C, etc.) arranged in clockwise order (see profile dimension images)
3. Define parameters:
   - type of finishing (drilling, milling, miter cutting)
   - Distance from profile end
4. Place order:
conventionally by fax or, preferably online in our eShop

Logical structure of the order key
Material number/length/[slot designation = finishing; parameter set]

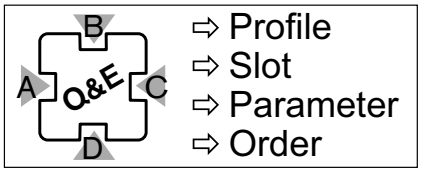

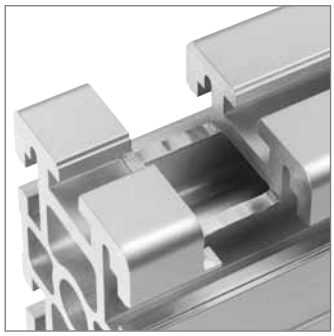
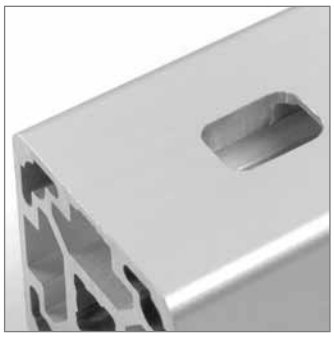

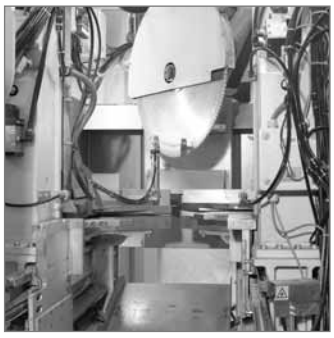

Profile finishing

Rexroth offers you numerous connection options for putting strut profiles together. The wide variety of connector types is due to the differing demands made of the applications:

- Right-angled
- Variable-angle
- Internal
- Torsion-resistant
- Vibration-resistant
- With or without profile finishing

If you require a finished profile, it can be provided for you in an installation-ready form.
When you select the corresponding material number the profile is provided in cut, burr-free form, or alternatively fully finished with drilled holes or threads.
This eliminates risk for you and reduces your production workload.

If you wish to undertake the finishing yourself, here are a few tips:

Saw and saw blade
Segmental metal circular saw blade, carbide-tipped
Number of teeth: 92 or 96
Rotational speed: at least 2500 rpm

Finishing of central holes
As a rule, the threads can be directly formed and cut, but countersinks facilitate their production. The central holes of the strut profiles are designed for the following thread manufacturing processes.

Threads	Finish	Note
M6	Thread forming	–
M8	Thread forming	–
M12	Thread cutting	–
M16	Thread forming	Pre-drilling in some cases

Drilling jigs
In the tools section you will find useful drilling jigs for the Rexroth standard finishes (p. 14-2).

Strut profiles with 6 mm slot

Strut profiles with 6 mm slot for light structures, such as supports and lab fixtures.

The 20x40 and 20x60 profiles are especially suitable for reinforcing; the 20x40x40 profile is suitable for constructing showcases, flow racks, and enclosures.

Slot, modular dimensions, central bore

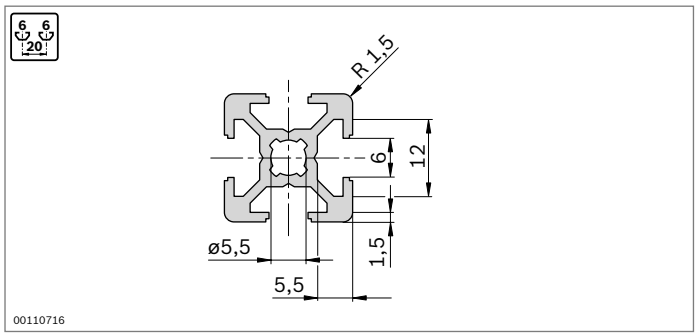

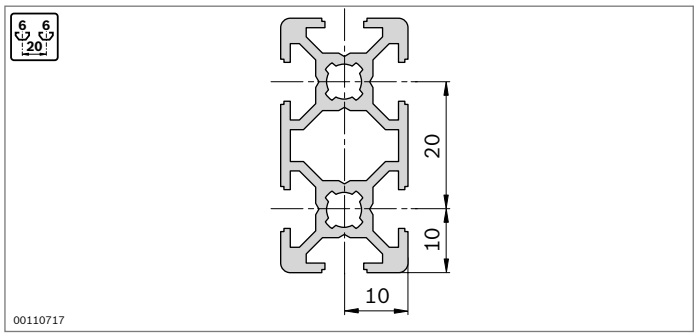

Profile finishing

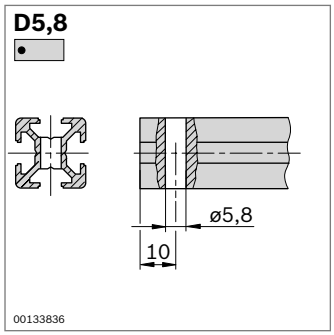

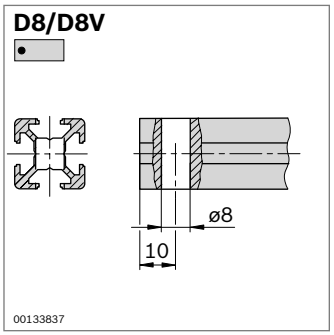

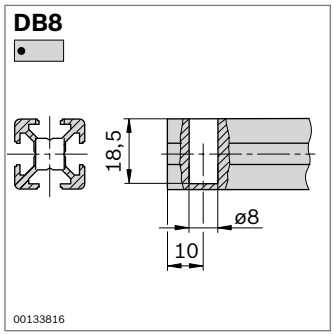

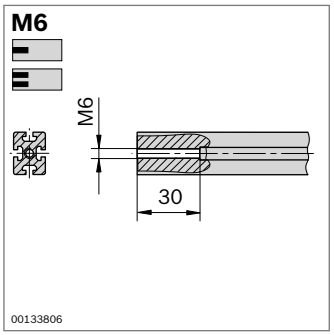

Minimum profile lengths (mm) for Quick & Easy standard profile finishes on one or both sides

	–	M6	D5.8	D8/DB8
–	50	50	50	50
M6	50	70	50	70
D5.8	50	50	50	50
D8/DB8	50	70	50	50

20x20

A = 1,6 cm²
I_x = 0,7 cm⁴
I_y = 0,7 cm⁴
W_x = 0,7 cm³
W_y = 0,7 cm³
m = 0,4 kg/m

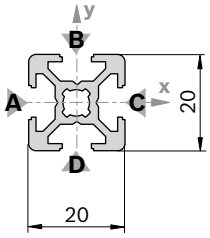

19168

20x20			L (mm)	No.
	1 pc		50 ... 3000	**3 842 992 888 / L**
	1 pc	M6	50 ... 3000	**3 842 993 230 / L**
	1 pc	M6 M6	70 ... 3000	**3 842 993 231 / L**
	1 pc	M6 D8	70 ... 3000	**3 842 993 494 / L**
	1 pc	D8	50 ... 3000	**3 842 993 493 / L**
	1 pc	D8 D8	50 ... 3000	**3 842 993 495 / L**
	1 pc	D8 D8V	50 ... 3000	**3 842 993 496 / L**
	20 pcs		3000	**3 842 517 179**

Cap	Color	ESD		No.
20x20 (1x)	Signal gray		100	**3 842 548 742**
20x20 (1x)	Black		20	**3 842 548 743**
Material:	PP			

Quick & Easy (p. 2-8, see fold-out section)

20x20	3 842 993 694/....
Length L (mm)	50 ... 3000
Standard profile finishes (note minimum length, p. 2-11)	M6 / D5.8 / D8 / DB8
Individual profile finishes (L_{max} = 2300 mm)	DI / DIS / MT / MTS / MI / MIS / DG[1)]

[1)] DG_{max} = 45°; L_{min1} / L_{min2} = 335 / 370 mm

20x20 1N

A = 1,9 cm²
I_x = 0,8 cm⁴
I_y = 0,8 cm⁴
W_x = 0,8 cm³
W_y = 0,8 cm³
m = 0,5 kg/m

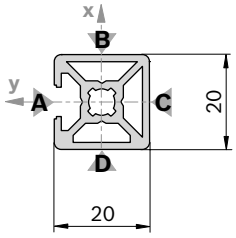

19169

Cap: See 20x20

20x20 1N		L (mm)	No.
	1 pc	50 ... 3000	**3 842 993 421 / L**
	20 pcs	3000	**3 842 536 475**

Quick & Easy (p. 2-8, see fold-out section)

20x20 1N	3 842 993 690/...
Length L (mm)	50 ... 3000
Standard profile finishes (note minimum length, p. 2-11)	M6 / D5.8 / D8 / DB8
Individual profile finishes (L_{max} = 2300 mm)	DI / DIS / MT / MTS / MI / MIS / DG[1)]

[1)] DG_{max} = 45°; L_{min1} / L_{min2} = 335 / 370 mm

20x20 2N

A = 1,8 cm²
I_x = 0,7 cm⁴
I_y = 0,8 cm⁴
W_x = 0,7 cm³
W_y = 0,8 cm³
m = 0,5 kg/m

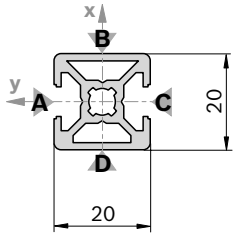

19170

Cap: See 20x20

20x20 2N		L (mm)	No.
	1 pc	50 ... 3000	**3 842 993 422 / L**
	20 pcs	3000	**3 842 536 478**

Quick & Easy (p. 2-8, see fold-out section)

20x20 2N	3 842 993 691/...
Length L (mm)	50 ... 3000
Standard profile finishes (note minimum length, p. 2-11)	M6 / D5.8 / D8 / DB8
Individual profile finishes (L_{max} = 2300 mm)	DI / DIS / MT / MTS / MI / MIS / DG[1)]

[1)] DG_{max} = 45°; L_{min1} / L_{min2} = 335 / 370 mm

20x20 2NVS

A = 1,8 cm²
I_x = 0,7 cm⁴
I_y = 0,7 cm⁴
W_x = 0,7 cm³
W_y = 0,7 cm³
m = 0,5 kg/m

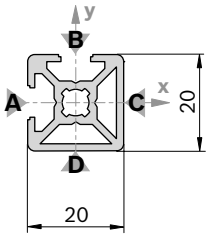

19171

Cap: see 20x20

20x20 2NVS		L (mm)	No.
1 pc		50 ... 3000	**3 842 992 924 / L**
20 pcs		3000	**3 842 519 658**

Quick & Easy (p. 2-8, see fold-out section)

20x20 2NVS	3 842 993 692/....
Length L (mm)	50 ... 3000
Standard profile finishes (note minimum length, p. 2-11)	M6 / D5.8 / D8 / DB8
Individual profile finishes (L_{max} = 2300 mm)	DI / DIS / MT / MTS / MI / MIS / DG[1)]

[1)] DG_{max} = 45°; L_{min1} / L_{min2} = 335 / 370 mm

20x20 3N

A = 1,7 cm²
I_x = 0,7 cm⁴
I_y = 0,8 cm⁴
W_x = 0,7 cm³
W_y = 0,7 cm³
m = 0,5 kg/m

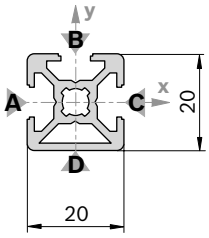

19172

Cap: See 20x20

20x20 3N		L (mm)	No.
1 pc		50 ... 3000	**3 842 992 889 / L**
20 pcs		3000	**3 842 517 180**

Quick & Easy (p. 2-8, see fold-out section)

20x20 3N	3 842 993 693/...
Length L (mm)	50 ... 3000
Standard profile finishes (note minimum length, p. 2-11)	M6 / D5.8 / D8 / DB8
Individual profile finishes (L_{max} = 2300 mm)	DI / DIS / MT / MTS / MI / MIS / DG[1)]

[1)] DG_{max} = 45°; L_{min1} / L_{min2} = 335 / 370 mm

20x20 R

A = 1,6 cm²
I_x = 0,6 cm⁴
I_y = 0,6 cm⁴
W_x = 0,5 cm³
W_y = 0,5 cm³
m = 0,4 kg/m

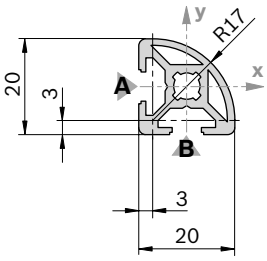

19173

Cap	Color	ESD		No.
20x20 R (1x)	Signal gray		20	**3 842 548 826**
20x20 R (1x)	Black		20	**3 842 548 827**
Material:	PP			

20x20 R		L (mm)	No.
1 pc		50 ... 3000	**3 842 992 890 / L**
20 pcs		3000	**3 842 517 183**

Quick & Easy (p. 2-8, see fold-out section)

20x20 R	3 842 993 695 / ....
Length L (mm)	50 ... 3000
Standard profile finishes (note minimum length, p. 2-11)	M6
Individual profile finishes (L_{max} = 2300 mm)	—

20x40

A = 2,9 cm2
I_x = 4,6 cm4
I_y = 1,2 cm4
W_x = 2,5 cm3
W_y = 1,4 cm3
m = 0,8 kg/m

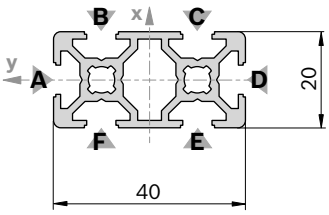

19174

20x40		L (mm)	No.
1 pc		50 ... 3000	**3 842 992 891 / L**
1 pc	D8 D8	50 ... 3000	**3 842 993 497 / L**
1 pc	D8 D8	50 ... 3000	**3 842 993 499 / L**
1 pc	D8 D8V	50 ... 3000	**3 842 993 500 / L**
1 pc	D8V	50 ... 3000	**3 842 993 498 / L**
1 pc	D8V D8V	50 ... 3000	**3 842 993 501 / L**
24 pcs		3000	**3 842 537 816**

Profile finishing: D8: in slots B/F, C/E
D8V: in slots A/D

Cap	Color	ESD		No.
20x20 (2x)	Signal gray		100	**3 842 548 742**
20x20 (2x)	Black		20	**3 842 548 743**
Material:	PP			

Quick & Easy (p. 2-8, see fold-out section)

20x40	3 842 993 696 / ...
Length L (mm)	50 ... 3000
Standard profile finishes (note minimum length, p. 2-11)	M6 / D5.8 / D8 / DB8
Individual profile finishes (L_{max} = 2300 mm)	DI / DIS / MT / MTS / MI / MIS / DG[1)]

[1)] DG_{max} = 45°; L_{min1} / L_{min2} = 370 / 440 mm

20x60

A = 3,5 cm2
I_x = 14,2 cm4
I_y = 1,7 cm4
W_x = 4,7 cm3
W_y = 1,7 cm3
m = 0,9 kg/m

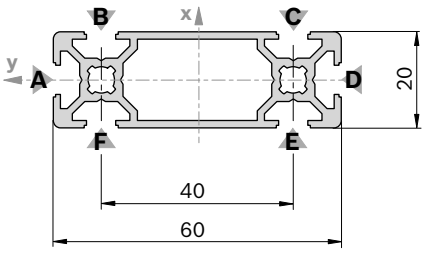

19175

20x60		L (mm)	No.
1 pc		50 ... 3000	**3 842 992 992 / L**
16 pcs		3000	**3 842 537 819**

Cap	Color	ESD		No.
20x60 (1x)	Signal gray		20	**3 842 548 828**
20x60 (1x)	Black		20	**3 842 548 829**
Material:	PP			

Quick & Easy (p. 2-8, see fold-out section)

20x60	3 842 993 698 / ...
Length L (mm)	50 ... 3000
Standard profile finishes (note minimum length, p. 2-11)	M6 / D5,8 (B,C,E,F)[1)] / D8 (B,C,E,F)[1)] / DB8
Individual profile finishes (L_{max} = 2300 mm)	DI / DIS / MT / MTS / MI / MIS / DG[2)]

[1)] For the specified slots
[2)] DG_{max} = 45°; L_{min1} / L_{min2} = 404 /508 mm

20x40x40

A = 4,2 cm2
I_x = 6,0 cm4
I_y = 6,0 cm4
W_x = 2,6 cm3
W_y = 2,6 cm3
m = 1,1 kg/m

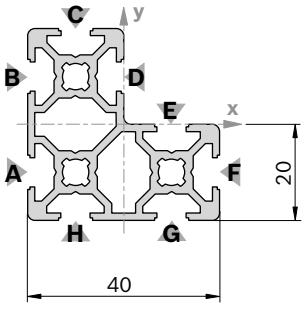

19176

20x40x40		L (mm)	No.
1 pc		50 ... 3000	**3 842 992 991 / L**
16 pcs		3000	**3 842 537 818**

Cap	Color	ESD		No.
20x20 (3x)	Signal gray		100	**3 842 548 742**
20x20 (3x)	Black		20	**3 842 548 743**
Material:	PP			

Quick & Easy (p. 2-8, see fold-out section)

20x40x40	3 842 993 697 / ...
Length L (mm)	50 ... 3000
Standard profile finishes (note minimum length, p. 2-11)	M6 / D5.8 / D8 / DB8
Individual profile finishes (L_{max} = 2300 mm)	DI / DIS / MT / MTS / MI / MIS / DG[1)]

[1)] DG_{max} = 45°; L_{min1} / L_{min2} = 370 / 440 mm

10x40

A = 2,1 cm2
I_x = 3,2 cm4
I_y = 0,2 cm4
W_x = 1,6 cm3
W_y = 0,4 cm3
m = 0,6 kg/m

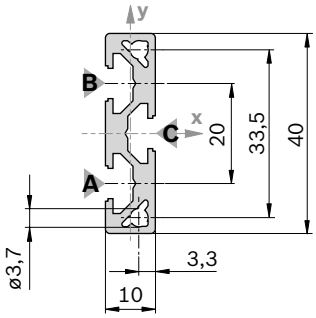

19177

Cap	Color	ESD		No.
10x40 (1x)	Signal gray		20	**3 842 548 766**
10x40 (1x)	Black		20	**3 842 548 767**
Material:	PP			

10x40		L (mm)	No.
1 pc		50 ... 3000	**3 842 993 077 / L**
10 pcs		3000	**3 842 526 817**

Quick & Easy (p. 2-8, see fold-out section)

10x40	3 842 993 683 / ...
Length L (mm)	50 ... 3000
Standard profile finishes (note minimum length, p. 2-11)	D5.8/D8
Individual profile finishes	–

Strut profiles with 8 mm slot

Strut profiles with a 8 mm slot are suitable for medium loads, such as material shuttles, light fixtures, frames and partition walls.

Profile 30x60x60 is suitable for constructing showcases and flow racks. Attractive covers and hoods can be designed with radius profiles.

Slot, modular dimensions, central bore

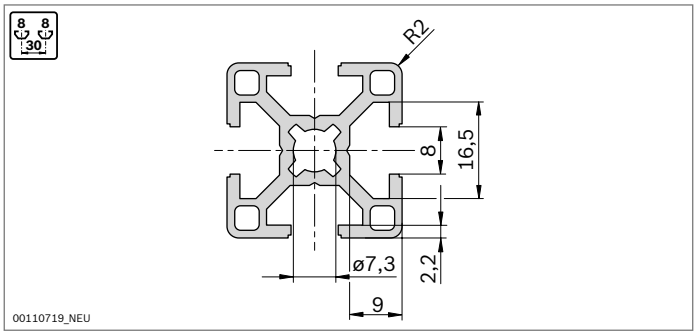

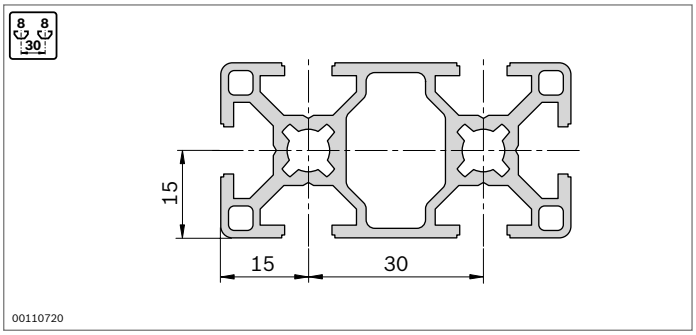

Profile finishing

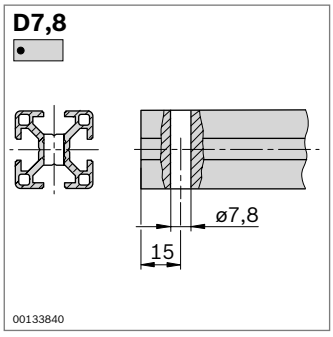

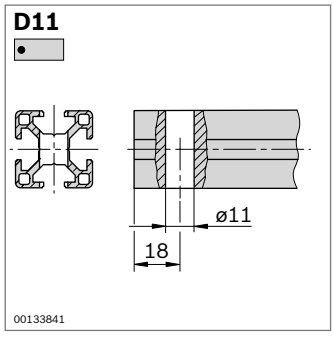

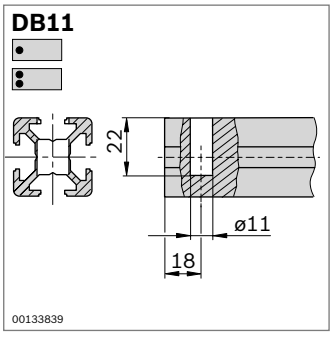

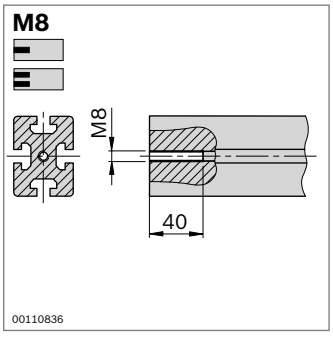

Minimum profile lengths (mm) for Quick & Easy standard profile finishes on one or both sides

	–	M8	D7.8	D11/DB11
–	50	50	50	50
M8	50	80	62	70
D7.8	50	62	60	50
D11/DB11	50	70	50	60

30x30

A = 3,1 cm²
I_x = 2,8 cm⁴
I_y = 2,8 cm⁴
W_x = 1,8 cm³
W_y = 1,8 cm³
m = 0,9 kg/m

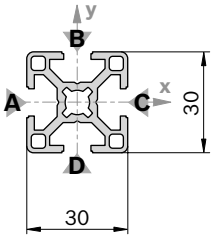

19178

30x30			L (mm)	No.
	1 pc		50 ... 5600	**3 842 990 720 / L**
	1 pc	M8	50 ... 5600	**3 842 990 721 / L**
	1 pc	M8 M8	80 ... 5600	**3 842 990 723 / L**
	1 pc	M8 D11	70 ... 5600	**3 842 990 724 / L**
	1 pc	D7,8 D7,8	60 ... 5600	**3 842 992 965 / L**
	1 pc	D11	50 ... 5600	**3 842 990 722 / L**
	1 pc	D11 D11	60 ... 5600	**3 842 990 725 / L**
	1 pc	D11 D11V	60 ... 5600	**3 842 990 726 / L**
	20 pcs		5600	**3 842 509 178**

Cap	Color	ESD		No.
30x30 (1x)	Signal gray		100	**3 842 548 744**
30x30 (1x)	Black		20	**3 842 548 745**
Material:	PP			

Cap with hole	Color	ESD		No.
30x30 (1x)	Signal gray		20	**3 842 548 774**
30x30 (1x)	Black		20	**3 842 548 775**
Material:	PP			

Quick & Easy (p. 2-8, see fold-out section)

30x30	3 842 993 703 / ...
Length L (mm)	50 ... 5600
Standard profile finishes (note minimum length, p. 2-16)	M8 / D7.8 / D11 / DB11
Individual profile finishes (L_{max} = 4900 mm)	DI / DIS / MT / MTS / MI / MIS / DG[1)]

[1)] DG_{max} = 45°; L_{min1} / L_{min2} = 352 / 404 mm

30x30 1N

A = 3,7 cm²
I_x = 3,1 cm⁴
I_y = 3,5 cm⁴
W_x = 2,0 cm³
W_y = 2,3 cm³
m = 1,0 kg/m

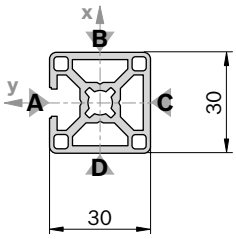

19179

Cap: See 30x30

30x30 1N			L (mm)	No.
	1 pc		50 ... 5600	**3 842 992 397 / L**
	20 pcs		5600	**3 842 506 948**

Quick & Easy (p. 2-8, see fold-out section)

30x30 1N	3 842 993 704 / ...
Length L (mm)	50 ... 5600
Standard profile finishes (note minimum length, p. 2-16)	M8 / D7.8 / D11 / DB11
Individual profile finishes (L_{max} = 4900 mm)	DI / DIS / MT / MTS / MI / MIS / DG[1)]

[1)] DG_{max} = 45°; L_{min1} / L_{min2} = 352 / 404 mm

30x30 2N

A = 3,7 cm²
I_x = 3,1 cm⁴
I_y = 3,5 cm⁴
W_x = 2,0 cm³
W_y = 2,3 cm³
m = 1,0 kg/m

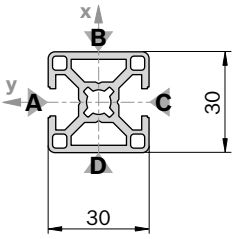

19180

Cap: See 30x30

30x30 2N			L (mm)	No.
	1 pc		50 ... 5600	**3 842 992 399 / L**
	20 pcs		5600	**3 842 506 950**

Quick & Easy (p. 2-8, see fold-out section)

30x30 2N	3 842 993 705 / ...
Length L (mm)	50 ... 5600
Standard profile finishes (note minimum length, p. 2-16)	M8 / D7.8 / D11 / DB11
Individual profile finishes (L_{max} = 4900 mm)	DI / DIS / MT / MTS / MI / MIS / DG[1)]

[1)] DG_{max} = 45°; L_{min1} / L_{min2} = 352 / 404 mm

30x30 2NVS

A = 3,5 cm2
I_x = 3,1 cm4
I_y = 3,1 cm4
W_x = 2,0 cm3
W_y = 2,0 cm3
m = 1,0 kg/m

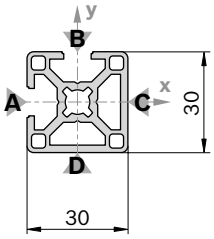

19181

Cap: See 30x30

30x30 2NVS		L (mm)	No.
1 pc		50 ... 5600	**3 842 992 398 / L**
20 pcs		5600	**3 842 506 949**

Quick & Easy (p. 2-8, see fold-out section)

30x30 2NVS	3 842 993 706 / ...
Length L (mm)	50 ... 5600
Standard profile finishes (note minimum length, p. 2-16)	M8 / D7.8 / D11 / DB11
Individual profile finishes (L_{max} = 4900 mm)	DI / DIS / MT / MTS / MI / MIS / DG[1)]

[1)] DG_{max} = 45°; L_{min1} / L_{min2} = 352 / 404 mm

30x30 3N

A = 3,3 cm2
I_x = 3,1 cm4
I_y = 2,8 cm4
W_x = 2,3 cm3
W_y = 2,1 cm3
m = 0,9 kg/m

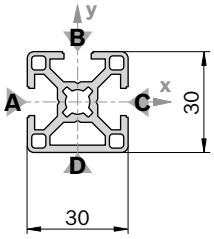

19182

Cap: See 30x30

30x30 3N		L (mm)	No.
1 pc		50 ... 5600	**3 842 992 400 / L**
20 pcs		5600	**3 842 506 951**

Quick & Easy (p. 2-8, see fold-out section)

30x30 3N	3 842 993 707 / ...
Length L (mm)	50 ... 5600
Standard profile finishes (note minimum length, p. 2-16)	M8 / D7.8 / D11 / DB11
Individual profile finishes (L_{max} = 4900 mm)	DI / DIS / MT / MTS / MI / MIS / DG[1)]

[1)] DG_{max} = 45°; L_{min1} / L_{min2} = 352 / 404 mm

30x30°

A = 3,7 cm2
I_x = 3,5 cm4
I_y = 3,6 cm4
W_x = 2,0 cm3
W_y = 1,9 cm3
m = 1,0 kg/m

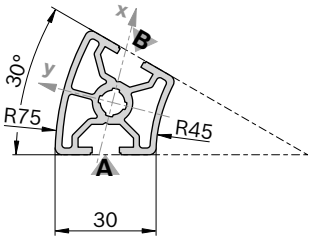

19183

Cap	Color	ESD		No.
30x30° (1x)	Black		20	**3 842 524 050**
Material:	PA			

30x30°		L (mm)	No.
1 pc		50 ... 5600	**3 842 993 010 / L**
20 pcs		5600	**3 842 524 031**

Quick & Easy (p. 2-8, see fold-out section)

30x30°	3 842 993 708 / ...
Length L (mm)	50 ... 5600
Standard profile finishes (note minimum length, p. 2-16)	M8
Individual profile finishes	–

30x45°

A = 4,0 cm²
I_x = 3,6 cm⁴
I_y = 5,1 cm⁴
W_x = 2,1 cm³
W_y = 2,3 cm³
m = 1,1 kg/m

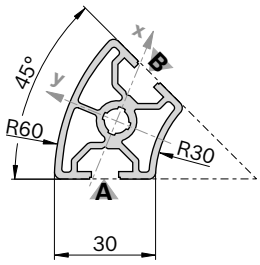

19184

30x45°		L (mm)	No.
1 pc		50 ... 5600	**3 842 993 011 / L**
20 pcs		5600	**3 842 524 034**

Quick & Easy (p. 2-8, see fold-out section)

30x45°	3 842 993 711 / ...
Length L (mm)	50 ... 5600
Standard profile finishes (note minimum length, p. 2-16)	M8
Individual profile finishes	–

Cap	Color	ESD		No.
30x45° (1x)	Black		20	**3 842 524 051**
Material:	PA			

30x60°

A = 3,6 cm²
I_x = 3,0 cm⁴
I_y = 4,1 cm⁴
W_x = 1,7 cm³
W_y = 1,9 cm³
m = 1,0 kg/m

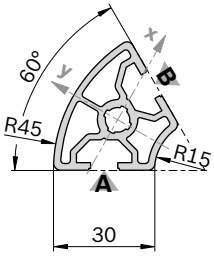

19185

30x60°		L (mm)	No.
1 pc		50 ... 5600	**3 842 993 012 / L**
20 pcs		5600	**3 842 524 037**

Quick & Easy (p. 2-8, see fold-out section)

30x60°	3 842 993 714 / ...
Length L (mm)	50 ... 5600
Standard profile finishes (note minimum length, p. 2-16)	M8
Individual profile finishes	–

30x30 R

3842517248

A = 2,9 cm²
I_x = 2,3 cm⁴
I_y = 2,3 cm⁴
W_x = 1,4 cm³
W_y = 1,4 cm³
m = 0,8 kg/m

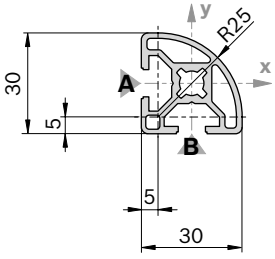

19186

30x30 R		L (mm)	No.
1 pc		50 ... 5600	**3 842 992 896 / L**
20 pcs		5600	**3 842 517 198**

Quick & Easy (p. 2-8, see fold-out section)

30x30 R	3 842 993 709 / ...
Length L (mm)	50 ... 5600
Standard profile finishes (note minimum length, p. 2-15)	M8 / DB11
Individual profile finishes	–

Cap	Color	ESD		No.
30x30 R (1x)	Signal gray		20	**3 842 548 776**
30x30 R (1x)	Black		20	**3 842 548 777**
Material:	PP			

30x60

A = 5,5 cm²
I_x = 19,6 cm⁴
I_y = 5,1 cm⁴
W_x = 7,0 cm³
W_y = 3,9 cm³
m = 1,5 kg/m

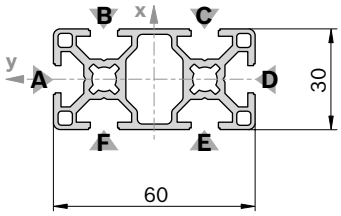

19187

30x60			L (mm)	No.
	1 pc		50 ... 5600	**3 842 992 457 / L**
	1 pc	M8	50 ... 5600	**3 842 992 458 / L**
	1 pc	M8 M8	80 ... 5600	**3 842 992 926 / L**
	1 pc	D11	50 ... 5600	**3 842 992 459 / L**
	1 pc	D11 D11	60 ... 5600	**3 842 992 460 / L**
	1 pc	D11 D11V	60 ... 5600	**3 842 992 463 / L**
	1 pc	D11V D11V	60 ... 5600	**3 842 992 462 / L**
	10 pcs		5600	**3 842 512 603**

Profile finishing: M8: in all core holes
D11: in slots B/F, C/E
D11V: in slots A/D

Cap	Color	ESD		No.
30x30 (2x)	Signal gray		100	**3 842 548 744**
30x60 (1x)	Signal gray		20	**3 842 548 780**
30x30 (2x)	Black		20	**3 842 548 745**
30x60 (1x)	Black		20	**3 842 548 781**
Material:	PP			

Cap with hole	Color	ESD		No.
30x30 (2x)	Signal gray		20	**3 842 548 774**
30x30 (2x)	Black		20	**3 842 548 775**
Material:	PP			

Quick & Easy (p. 2-8, see fold-out section)

30x60	3 842 993 712 / ...
Length L (mm)	50 ... 5600
Standard profile finishes (note minimum length, p. 2-16)	M8 / D7.8 / D11 / DB11
Individual profile finishes (L_{max} = 4900 mm)	DI / DIS / MT / MTS / MI / MIS / DG[1)]

[1)] DG_{max} = 45°; L_{min1} / L_{min2} = 404 / 508 mm

30x60 4N

A = 5,8 cm²
I_x = 20,2 cm⁴
I_y = 5,5 cm⁴
W_x = 6,7 cm³
W_y = 3,8 cm³
m = 1,6 kg/m

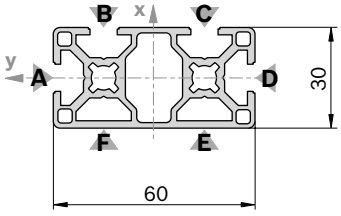

19188

Cap: See 30x60

30x60 4N		L (mm)	No.
1 pc		50 ... 6000	**3 842 993 420 / L**
10 pcs		6070	**3 842 536 472**

Quick & Easy (p. 2-8, see fold-out section)

30x60 4N	3 842 993 713 / ...
Length L (mm)	50 ... 6000
Standard profile finishes (note minimum length, p. 2-16)	M8 / D7.8 / D11 / DB11
Individual profile finishes (L_{max} = 5400 mm)	DI / DIS / MT / MTS / MI / MIS / DG[1)]

[1)] DG_{max} = 45°; L_{min1} / L_{min2} = 404 / 508 mm

30x60x60

A = 8,2 cm²
I_x = 26,2 cm⁴
I_y = 26,2 cm⁴
W_x = 7,6 cm³
W_y = 7,6 cm³
m = 2,2 kg/m

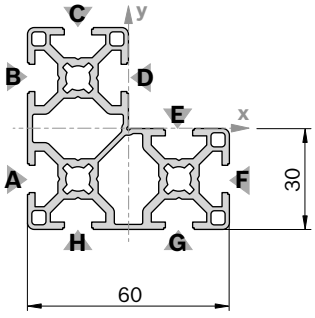

19189

30x60x60		L (mm)	No.
1 pc		50 ... 5600	**3 842 993 016 / L**
20 pcs		5600	**3 842 524 049**

Quick & Easy (p. 2-8, see fold-out section)

30x60x60	3 842 993 715 / ...
Length L (mm)	50 ... 5600
Standard profile finishes (note minimum length, p. 2-16)	M8 / D7.8 / D11 / DB11
Individual profile finishes (L_{max} = 4900 mm)	DI / DIS / MT / MTS / MI / MIS / DG[1)]

[1)] DG_{max} = 45°; L_{min1} / L_{min2} = 404 / 508 mm

Cap	Color	ESD		No.
30x30 (3x)	Signal gray		100	**3 842 548 744**
30x30 (3x)	Black		20	**3 842 548 745**
Material:	PP			

30x90

A = 7,7 cm²
I_x = 60,7 cm⁴
I_y = 7,3 cm⁴
W_x = 13,5 cm³
W_y = 4,9 cm³
m = 2,1 kg/m

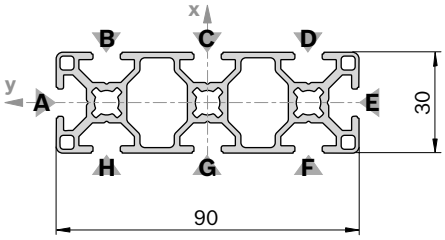

19190

30x90	L (mm)	No.
20 pcs	6070	**3 842 541 937**

Quick & Easy (p. 2-8, see fold-out section)

30x90	3 842 993 762 / ...
Length L (mm)	50 ... 6000
Standard profile finishes (note minimum length, p. 2-16)	M8 / D7,8 (B,C,D,F,G,H)[1)]/ D11 (B,C,D,F,G,H)[1)] / DB11
Individual profile finishes (L_{max} = 5400 mm)	DI / DIS / MT / MTS / MI / MIS / DG[2)]

1) For the specified slots
2) DG_{max} = 45°; L_{min1} / L_{min2} = 150 / 150 mm

Cap	Color	ESD		No.
30x30 (3x)	Signal gray		100	**3 842 548 744**
30x30 (3x)	Black		20	**3 842 548 745**
Material:	PP			

Cap with hole	Color	ESD		No.
30x30 (3x)	Signal gray		20	**3 842 548 774**
30x30 (3x)	Black		20	**3 842 548 775**
Material:	PP			

30x120

A = 9,9 cm²
I_x =136,3 cm⁴
I_y = 9,6 cm⁴
W_x = 22,7 cm³
W_y = 6,4 cm³
m = 2,7 kg/m

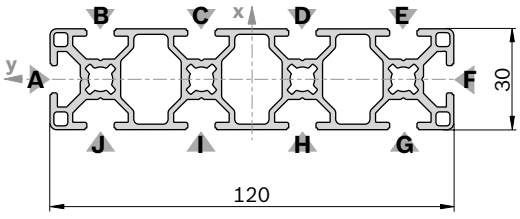

19191

30x120	L (mm)	No.
20 pcs	6070	**3 842 541 939**

Quick & Easy (p. 2-8, see fold-out section)

30x120	3 842 993 763 / ...
Length L (mm)	50 ... 6000
Standard profile finishes (note minimum length, p. 2-16)	M8 / D7,8 (B,C,D,E, G,H,I,J)[1)] / D11 (B,C,D,E, G,H,I,J)[1)] / DB11
Individual profile finishes (L_{max} = 5400 mm)	DI / DIS / MT / MTS / MI / MIS / DG[2)]

1) For the specified slots
2) DG_{max} = 45°; L_{min1} / L_{min2} = 150 / 150 mm

Cap	Color	ESD		No.
30x30 (4x)	Signal gray		100	**3 842 548 744**
30x60 (2x)	Signal gray		20	**3 842 548 780**
30x30 (4x)	Black		20	**3 842 548 745**
30x60 (2x)	Black		20	**3 842 548 781**
Material:	PP			

Cap with hole	Color	ESD		No.
30x30 (4x)	Signal gray		20	**3 842 548 774**
30x30 (4x)	Black		20	**3 842 548 775**
Material:	PP			

30x45

A = 4,0 cm²
I_x = 8,1 cm⁴
I_y = 3,9 cm⁴
W_x = 3,9 cm³
W_y = 2,9 cm³
m = 1,1 kg/m

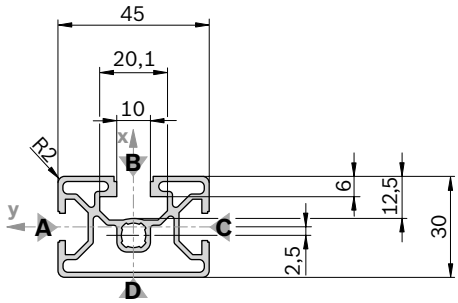

19192

Cap	Color	ESD		No.
30x45 (1x)	Signal gray		20	**3 842 548 778**
30x45 (1x)	Black		20	**3 842 548 779**
Material:	PP			

Cap with hole	Color	ESD		No.
30x45 (1x)	Black		20	**3 842 531 220**
Material:	PA			

30x45		L (mm)	No.
1 pc		50 ... 5600	**3 842 992 430 / L**
1 pc	M8	50 ... 5600	**3 842 992 431 / L**
18 pcs		5600	**3 842 511 704**

Quick & Easy (p. 2-8, see fold-out section)

30x45	3 842 993 710 / ...
Length L (mm)	50 ... 5600
Standard profile finishes (note minimum length, p. 2-16)	M8 / D7,8 (A,C)[1] / D9,8 (B)[1]/ D11 (A,C)[1] / DB11 / D17 (B)[1]
Individual profile finishes (L_{max} = 5400 mm)	DI / DIS / MT / MTS / MI / MIS / DG[2]

[1] For the specified slots
[2] DG_{max} = 45°; L_{min1} / L_{min2} = 378 / 456 mm

60x60 8N

A = 9,8 cm²
I_x = 39,7 cm⁴
I_y = 39,7 cm⁴
W_x = 13,2 cm³
W_y = 13,2 cm³
m = 2,6 kg/m

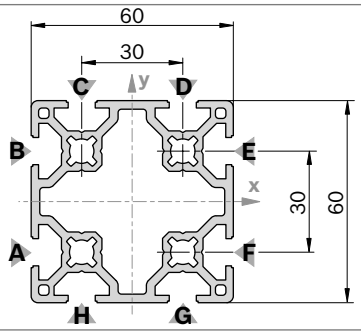

19193

Cap	Color	ESD		No.
60x60 8N (1x)	Light gray		20	**3 842 535 586**
Material:	PA			

60x60 8N		L (mm)	No.
1 pc		50 ... 6000	**3 842 993 033 / L**
20 pcs		6070	**3 842 535 176**

Quick & Easy (p. 2-8, see fold-out section)

60x60 8N	3 842 993 669 / ...
Length L (mm)	50 ... 6000
Standard profile finishes (note minimum length, p. 2-16)	M8 / D7.8 / D11 / DB11
Individual profile finishes (L_{max} = 5400 mm)	DI / DIS / MT / MTS / MI / MIS / DG[2]

[2] DG_{max} = 45°; L_{min1} / L_{min2} = 404 / 508 mm

11x20

A = 1,0 cm²
I_x = 0,5 cm⁴
I_y = 0,1 cm⁴
W_x = 0,7 cm³
W_y = 0,3 cm³
m = 0,3 kg/m

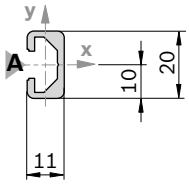

19194

Cap	Color	ESD		No.
11x20 (1x)	Black		20	**3 842 513 584**
Material:	PA			

11x20		L (mm)	No.
1 pc		50 ... 2000	**3 842 992 476 / L**
10 pcs		2000	**3 842 513 581**

Quick & Easy (p. 2-8, see fold-out section)

11x20	3 842 993 688 / ...
Length L (mm)	50 ... 2000
Standard profile finishes (note minimum length, p. 2-16)	D7.8 / D11
Individual profile finishes	–

15x120

A = 9,0 cm2
I_x = 110,4 cm4
I_y = 2,2 cm4
W_x = 18,4 cm3
W_y = 2,7 cm3
m = 2,4 kg/m

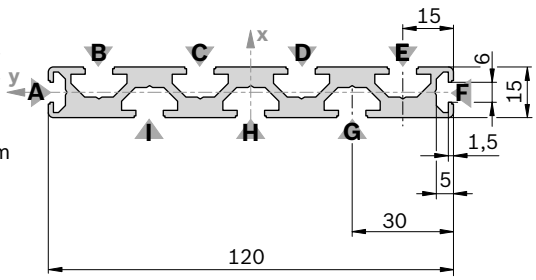

19195

Cap	Color	ESD		No.
15x120 (1x)	Signal gray		20	**3 842 548 768**
15x120 (1x)	Black		20	**3 842 548 769**
Material:	PP			

15x120		L (mm)	No.
1 pc		50 ... 3000	**3 842 993 078 / L**
10 pcs		3000	**3 842 537 821**

Quick & Easy (p. 2-8, see fold-out section)

15x120	3 842 993 684 / ...
Length L (mm)	80 ... 3000
Standard profile finishes (note minimum length, p. 2-16)	D7,8 (B,C,D,E,G,H,I)[1] / D11 (B,C,D,E,G,H,I)[1]
Individual profile finishes (L_{max} = 2300 mm)	DI / DIS / MT / MTS / MI / MIS

[1] For the specified slots

Strut profiles with 10 mm slot

The Rexroth modular profile system, with 10 mm slots in the modular dimensions 40 mm, 45 mm, 50 mm, and 60 mm, covers all conventional profile dimensions on the world market.

Thanks to their computer-optimized design, the strut profiles L with 10 mm slot (modular dimensions 40 mm, 45 mm, and 50 mm, e.g. 50x50L) combine high strengths with minimum use of materials. This gives you a cost-effective and stable solution for the construction of tables, protective enclosures or frames, for instance.

Slot, modular dimensions, central bore

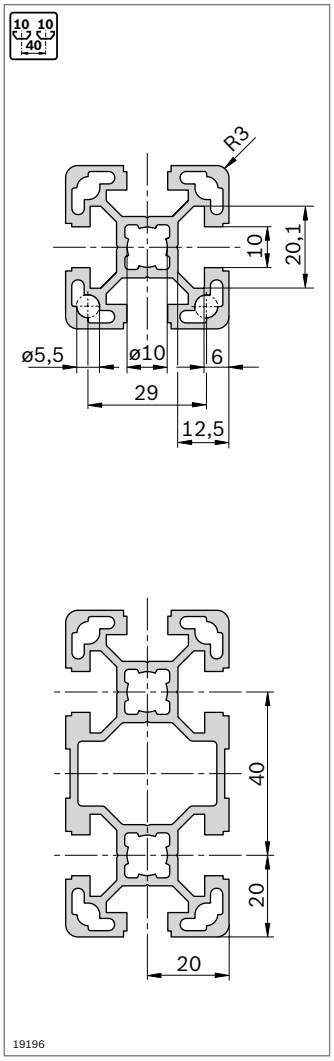

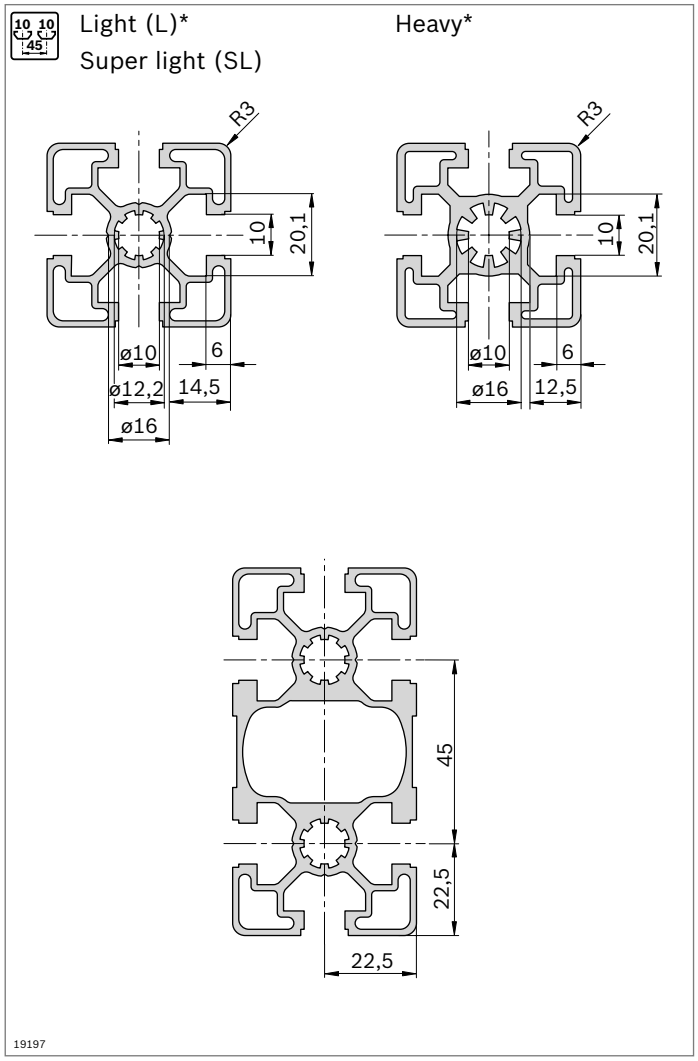

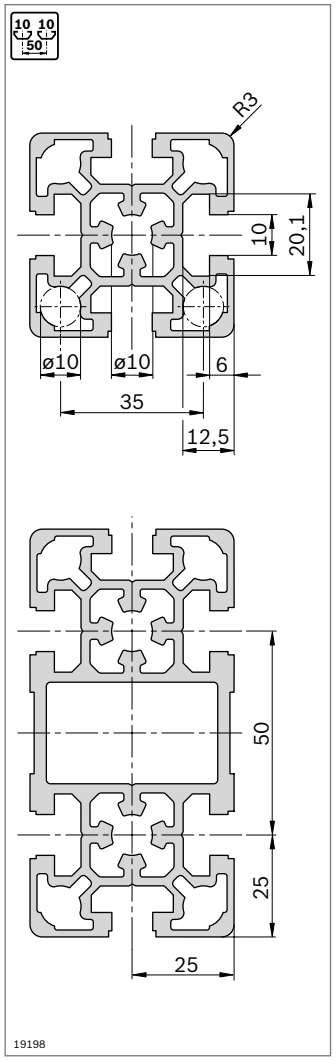

*) The following L-profiles have a “heavy” slot geometry:
45x90x90L; 45x90x90L 4N; 90x90L; 90x90L 4N; 90x90L 4NVS; 90x180L

Minimum profile lengths (mm) for Quick & Easy standard profile finishes on one or both sides

	–	M12	M16	D9.8	D17/DB17	F1
–	50	60	120	50	60	60
M12	60	110	180	90	90	110
M16	120	180	240	150	170	170
D9.8	50	90	150	80	70	90
D17/DB17	60	90	170	70	80	90
F1	60	110	170	90	90	80

For applications with high loads, we recommend especially stable profiles with 10 mm slots, e.g. for heavy work tables, fixtures, machine frames, transport shuttles, protective enclosures, and handling systems.

Due to its very sturdy design, this slot allows maximum strength connections.

Profile finishing

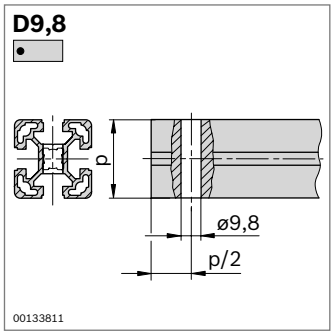

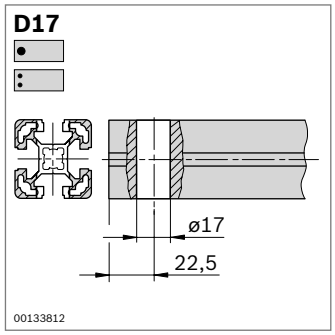

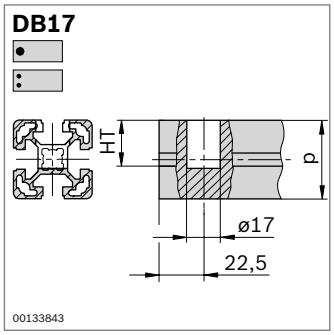

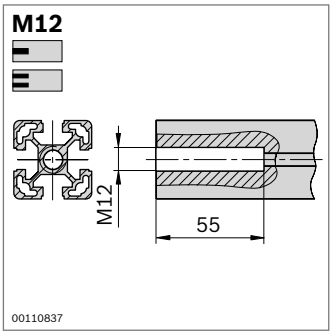

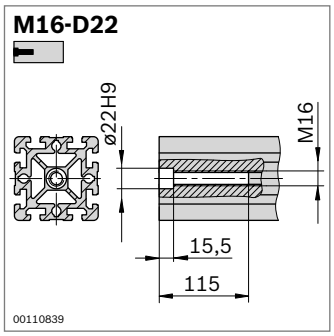

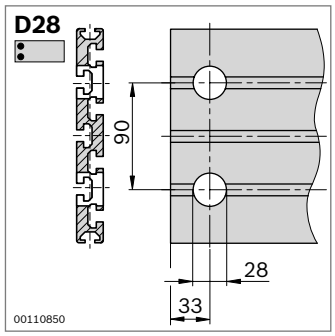

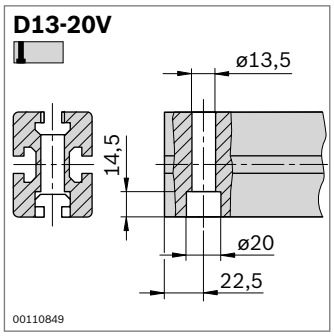

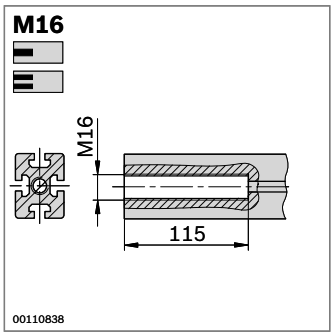

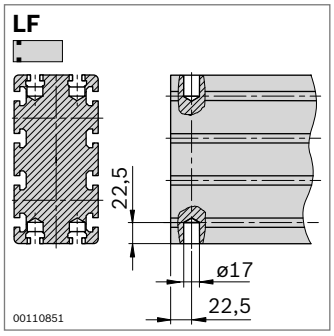

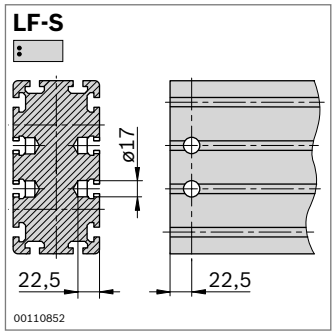

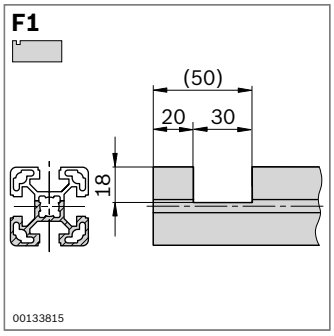

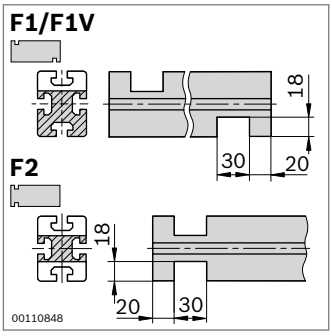

40x40L

A = 5,6 cm²
I_x = 9,1 cm⁴
I_y = 9,1 cm⁴
W_x = 4,5 cm³
W_y = 4,5 cm³
m = 1,5 kg/m

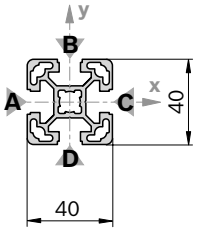

19199

40x40L			L (mm)	No.
	1 pc		50 ... 6000	**3 842 993 120 / L**
	1 pc	M12	60 ... 6000	**3 842 993 121 / L**
	1 pc	M12 M12	110 ... 6000	**3 842 993 122 / L**
	1 pc	M12 D17	90 ... 6000	**3 842 993 123 / L**
	1 pc	D17	50 ... 6000	**3 842 993 124 / L**
	1 pc	D17 D17	80 ... 6000	**3 842 993 125 / L**
	1 pc	D17 D17V	80 ... 6000	**3 842 993 126 / L**
	1 pc	D9,8 D9,8	80 ... 6000	**3 842 993 129 / L**
	20 pcs		6070	**3 842 529 339**

Cap	Color	ESD		No.
40x40 (1x)	Signal gray		100	**3 842 548 746**
40x40 (1x)	Black		20	**3 842 548 747**
Material:	PP			

Cap with hole	Color	ESD		No.
40x40 (1x)	Signal gray		20	**3 842 548 782**
40x40 (1x)	Black		20	**3 842 548 783**
Material:	PP			

Quick & Easy (p. 2-8, see fold-out section)

40x40L	3 842 993 724 / ...
Length L (mm)	50 ... 6000
Standard profile finishes (note minimum length, p. 2-25)	M12 / D9,8 / D17 / DB17 / F1 (A)[1]
Individual profile finishes (L_{max} = 5400 mm)	DI / DIS / MT / MTS / MI / MIS / DG[2]

[1] For the specified slots
[2] DG_{max} = 45°; L_{min1} / L_{min2} = 370 / 440 mm

40x40L 0N

A = 6,3 cm²
I_x = 10,4 cm⁴
I_y = 10,4 cm⁴
W_x = 5,2 cm³
W_y = 5,2 cm³
m = 1,7 kg/m

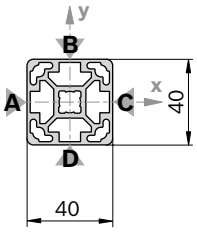

19200

Cap: See 40x40

40x40L 0N		L (mm)	No.
	20 pcs	6070	**3 842 540 954**

Quick & Easy (p. 2-8, see fold-out section)

40x40L 0N	3 842 993 760 / ...
Length L (mm)	50 ... 6000
Standard profile finishes (note minimum length, p. 2-25)	M12 / D9.8 / D17 / DB17
Individual profile finishes (L_{max} = 5400 mm)	DI / DIS / MT / MTS / MI / MIS / DG[1]

[1] DG_{max} = 45°; L_{min1} / L_{min2} = 370 / 440 mm

40x40L 1N

A = 5,6 cm²
I_x = 9,0 cm⁴
I_y = 9,0 cm⁴
W_x = 4,5 cm³
W_y = 4,5 cm³
m = 1,5 kg/m

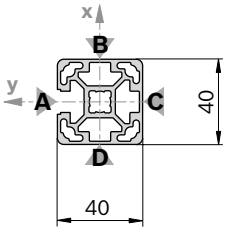

19201

Cap: See 40x40

40x40L 1N		L (mm)	No.
	1 pc	50 ... 6000	**3 842 993 185 / L**
	1 pc M12 M12	110 ... 6000	**3 842 993 186 / L**
	20 pcs	6070	**3 842 529 361**

Quick & Easy (p. 2-8, see fold-out section)

40x40L 1N	3 842 993 719 / ...
Length L (mm)	50 ... 6000
Standard profile finishes (note minimum length, p. 2-25)	M12 / D9.8 / D17 / DB17
Individual profile finishes (L_{max} = 5400 mm)	DI / DIS / MT / MTS / MI / MIS / DG[1]

[1] DG_{max} = 45°; L_{min1} / L_{min2} = 370 / 440 mm

40x40L 2N

A = 6,0 cm²
I_x = 9,0 cm⁴
I_y = 10,3 cm⁴
W_x = 4,5 cm³
W_y = 5,2 cm³
m = 1,6 kg/m

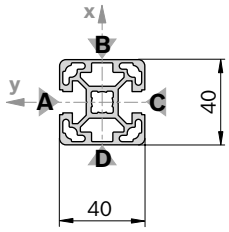

19202

Cap: See 40x40

40x40L 2N		L (mm)	No.
1 pc		50 ... 6000	**3 842 993 187 / L**
1 pc	M12 M12	110 ... 6000	**3 842 993 188 / L**
20 pcs		6070	**3 842 529 363**

Quick & Easy (p. 2-8, see fold-out section)

40x40L 2N	3 842 993 720 / ...
Length L (mm)	50 ... 6000
Standard profile finishes (note minimum length, p. 2-25)	M12 / D9.8 / D17 / DB17
Individual profile finishes (L_{max} = 5400 mm)	DI / DIS / MT / MTS / MI / MIS / DG[1)]

[1)] DG_{max} = 45°; L_{min1} / L_{min2} = 370 / 440 mm

40x40L 2NVS

A = 6,0 cm²
I_x = 9,7 cm⁴
I_y = 9,7 cm⁴
W_x = 4,9 cm³
W_y = 4,9 cm³
m = 1,6 kg/m

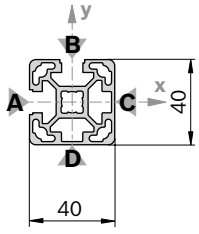

19203

Cap: See 40x40

40x40L 2NVS		L (mm)	No.
1 pc		50 ... 6000	**3 842 993 189 / L**
1 pc	M12 M12	110 ... 6000	**3 842 993 190 / L**
20 pcs		6070	**3 842 529 365**

Quick & Easy (p. 2-8, see fold-out section)

40x40L 2NVS	3 842 993 721 / ...
Length L (mm)	50 ... 6000
Standard profile finishes (note minimum length, p. 2-25)	M12 / D9.8 / D17 / DB17
Individual profile finishes (L_{max} = 5400 mm)	DI / DIS / MT / MTS / MI / MIS / DG[1)]

[1)] DG_{max} = 45°; L_{min1} / L_{min2} = 370 / 440 mm

40x40L 3N

A = 5,8 cm²
I_x = 9,7 cm⁴
I_y = 9,0 cm⁴
W_x = 4,8 cm³
W_y = 4,5 cm³
m = 1,6 kg/m

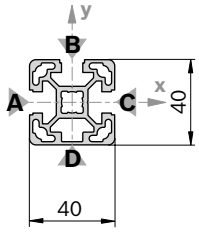

19204

Cap: See 40x40

40x40L 3N		L (mm)	No.
1 pc		50 ... 6000	**3 842 993 191 / L**
1 pc	M12 M12	110 ... 6000	**3 842 993 192 / L**
20 pcs		6070	**3 842 529 367**

Quick & Easy (p. 2-8, see fold-out section)

40x40L 3N	3 842 993 722 / ...
Length L (mm)	50 ... 6000
Standard profile finishes (note minimum length, p. 2-25)	M12 / D9.8 / D17 / DB17
Individual profile finishes (L_{max} = 5400 mm)	DI / DIS / MT / MTS / MI / MIS / DG[1)]

[1)] DG_{max} = 45°; L_{min1} / L_{min2} = 370 / 440 mm

40x30°

A = 6,2 cm²
I_x = 9,4 cm⁴
I_y = 11,8 cm⁴
W_x = 4,7 cm³
W_y = 5,9 cm³
m = 1,7 kg/m

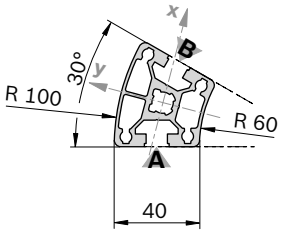

19205

40x30°		L (mm)	No.
1 pc		50 ... 6000	**3 842 993 195 / L**
12 pcs		6070	**3 842 529 371**

Quick & Easy (p. 2-8, see fold-out section)

40x30°	3 842 993 718 / ...
Length L (mm)	50 ... 6000
Standard profile finishes (note minimum length, p. 2-25)	M12
Individual profile finishes	–

Cap	Color	ESD		No.
40x30° (1x)	Black		20	**3 842 529 049**
Material:	PA			

40x45°

A = 6,8 cm²
I_x = 9,9 cm⁴
I_y = 16,6 cm⁴
W_x = 5,0 cm³
W_y = 8,3 cm³
m = 1,8 kg/m

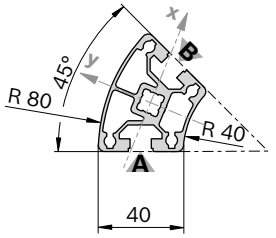

19206

40x45°		L (mm)	No.
1 pc		50 ... 6000	**3 842 993 197 / L**
12 pcs		6070	**3 842 529 373**

Quick & Easy (p. 2-8, see fold-out section)

40x45°	3 842 993 726 / ...
Length L (mm)	50 ... 6000
Standard profile finishes (note minimum length, p. 2-25)	M12
Individual profile finishes	–

Cap	Color	ESD		No.
45x45° (1x)	Black		20	**3 842 529 050**
Material:	PA			

40x60°

A = 6,3 cm²
I_x = 8,7 cm⁴
I_y = 13,1 cm⁴
W_x = 4,3 cm³
W_y = 6,5 cm³
m = 1,7 kg/m

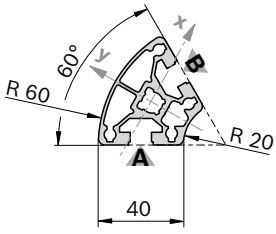

19207

40x60°		L (mm)	No.
1 pc		50 ... 6000	**3 842 993 198 / L**
12 pcs		6070	**3 842 529 375**

Quick & Easy (p. 2-8, see fold-out section)

40x60°	3 842 993 727 / ...
Length L (mm)	50 ... 6000
Standard profile finishes (note minimum length, p. 2-25)	M12
Individual profile finishes	–

Cap	Color	ESD		No.
40x60° (1x)	Black		20	**3 842 529 051**
Material:	PA			

40x40L R

A = 5,0 cm2
I_x = 7,2 cm4
I_y = 7,2 cm4
W_x = 3,6 cm3
W_y = 3,6 cm3
m = 1,3 kg/m

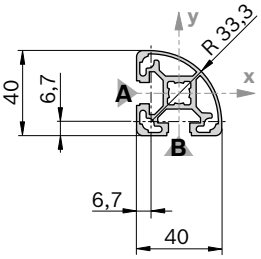

19208

Cap	Color	ESD		No.
40x40 R (1x)	Signal gray		20	**3 842 548 784**
40x40 R (1x)	Black		20	**3 842 548 785**
Material:	PP			

40x40L R		L (mm)	No.
1 pc		50 ... 6000	**3 842 993 184 / L**
20 pcs		6070	**3 842 529 359**

Quick & Easy (p. 2-8, see fold-out section)

40x40L R	3 842 993 725 / ...
Length L (mm)	50 ... 6000
Standard profile finishes (note minimum length, p. 2-25)	M12 / DB17 (A,B)[1]
Individual profile finishes	–

[1] For the specified slots

40x40 HR

A = 5,5 cm2
I_x = 8,1 cm4
I_y = 7,6 cm4
W_x = 4,0 cm3
W_y = 3,6 cm3
m = 1,5 kg/m

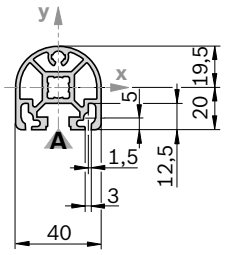

19209

Cap	Color	ESD		No.
40x40 HR (1x)	Signal gray		20	**3 842 548 786**
40x40 HR (1x)	Black		20	**3 842 548 787**
Material:	PP			

Cap with hole[1]	Color	ESD		No.
40x40 HR (1x)	Signal gray		20	**3 842 548 786**
40x40 HR (1x)	Black		20	**3 842 548 787**
Material:	PP			

[1] The cover cap is also suitable for use with a hole, which can be broken out

40x40 HR		L (mm)	No.
1 pc		50 ... 6000	**3 842 993 256 / L**
1 pc	M12 M12	110 ... 6000	**3 842 993 257 / L**
20 pcs		6070	**3 842 529 381**

Quick & Easy (p. 2-8, see fold-out section)

40x40 HR	3 842 993 723 / ...
Length L (mm)	50 ... 6000
Standard profile finishes (note minimum length, p. 2-25)	M12 / DB17
Individual profile finishes (L_{max} = 5400 mm)	DI / DIS / MT / MTS / MI / MIS / DG[1]

[1] DG_{max} = 45°; L_{min1} / L_{min2} = 370 / 440 mm

40x80L

A = 9,9 cm²
I_x = 63,4 cm⁴
I_y = 17,3 cm⁴
W_x = 15,9 cm³
W_y = 8,7 cm³
m = 2,7 kg/m

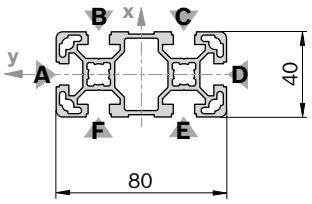

19210

40x80L			L (mm)	No.
	1 pc		50 ... 6000	**3 842 993 130 / L**
	1 pc	M12	60 ... 6000	**3 842 993 131 / L**
	1 pc	M12 M12	110... 6000	**3 842 993 132 / L**
	1 pc	D17 D17	80 ... 6000	**3 842 993 135 / L**
	1 pc	D17 D17V	80 ... 6000	**3 842 993 136 / L**
	1 pc	D17V	60 ... 6000	**3 842 993 137 / L**
	1 pc	D17V D17V	80 ... 6000	**3 842 993 138 / L**
	12 pcs		6070	**3 842 529 341**

Profile finishing: M12: In all central holes
D17: in slots B/F, C/E
D17V: in slots A/D

Cover cap	Color	ESD		No.
40x80 (1x)	Signal gray		20	**3 842 548 748**
40x80 (1x)	Black		20	**3 842 548 749**
Material:	PP			

Cap with hole	Color	ESD		No.
40x80 (1x)	Signal gray		20	**3 842 548 788**
40x80 (1x)	Black		20	**3 842 548 789**
Material:	PP			

Quick & Easy (p. 2-8, see fold-out section)

40x80L	3 842 993 728 / ...
Length L (mm)	50 ... 6000
Standard profile finishes (note minimum length, p. 2-25)	M12 / D9.8 / D17 / DB17 / F1 (A,D)[1]
Individual profile finishes (L_{max} = 5400 mm)	DI / DIS / MT / MTS / MI / MIS / DG[2]

[1] For the specified slots
[2] DG_{max} = 45°; L_{min1} / L_{min2} = 439 / 578 mm

40x80L 4N

A = 10,4 cm²
I_x = 65,2 cm⁴
I_y = 19,1 cm⁴
W_x = 16,3 cm³
W_y = 9,9 cm³
m = 2,8 kg/m

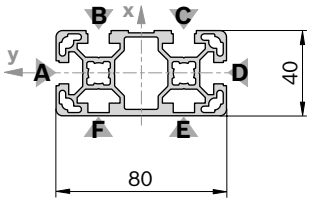

19211

Cap: See 40x80

40x80L 4N		L (mm)	No.
	1 pc	50 ... 6000	**3 842 993 424 / L**
	12 pcs	6070	**3 842 536 484**

Quick & Easy (p. 2-8, see fold-out section)

40x80L 4N	3 842 993 729 / ...
Length L (mm)	50 ... 6000
Standard profile finishes (note minimum length, p. 2-25)	M12 / D9.8 / D17 / DB17 / F1 (A,D)[1]
Individual profile finishes (L_{max} = 5400 mm)	DI / DIS / MT / MTS / MI / MIS / DG[2]

[1] For the specified slots
[2] DG_{max} = 45°; L_{min1} / L_{min2} = 439 / 578 mm

40x80L 3NVS

A = 10,6 cm²
I_x = 67,8 cm⁴
I_y = 19,0 cm⁴
W_x = 17,0 cm³
W_y = 9,5 cm³
m = 2,9 kg/m

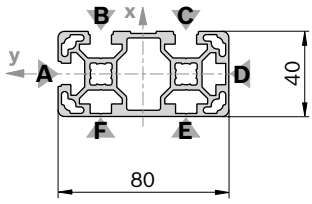

19212

Cap: see 40x80

40x80L 3NVS		L (mm)	No.
1 pc		50 ... 6000	**3 842 993 654 / L**
12 pcs		6070	**3 842 538 330**

Quick & Easy (p. 2-8, see fold-out section)

40x80L 3NVS	3 842 993 753 / ...
Length L (mm)	50 ... 6000
Standard profile finishes (note minimum length, p. 2-25)	M12 / D9.8 / D17 / DB17
Individual profile finishes (L_{max} = 5400 mm)	DI / DIS / MT / MTS / MI / MIS / DG[1)]

[1)] DG_{max} = 45°; L_{min1} / L_{min2} = 439 / 578 mm

40x80x80L

A = 15,4 cm²
I_x = 96,6 cm⁴
I_y = 96,6 cm⁴
W_x = 24,2 cm³
W_y = 24,2 cm³
m = 4,2 kg/m

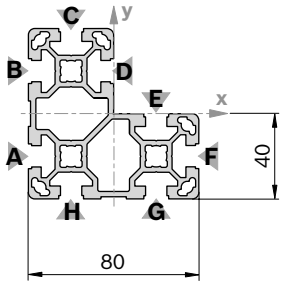

19213

40x80x80L		L (mm)	No.
1 pc		50 ... 6000	**3 842 993 193 / L**
8 pcs		6070	**3 842 537 827**

Quick & Easy (p. 2-8, see fold-out section)

40x80x80L	3 842 993 730 / ...
Length L (mm)	50 ... 6000
Standard profile finishes (note minimum length, p. 2-25)	M12 / D9.8 / D17 / DB17
Individual profile finishes (L_{max} = 5400 mm)	DI / DIS / MT / MTS / MI / MIS / DG[1)]

[1)] DG_{max} = 45°; L_{min1} / L_{min2} = 439 / 578 mm

Cap	Color	ESD		No.
40x80x80 (1x)	Signal gray		20	**3 842 548 790**
40x80x80 (1x)	Black		20	**3 842 849 791**
Material:	PP			

40x120L

A = 15,5 cm²
I_x = 203,2 cm⁴
I_y = 27,8 cm⁴
W_x = 33,9 cm³
W_y = 13,9 cm³
m = 4,2 kg/m

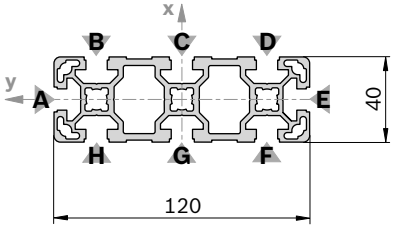

19214

40x120L		L (mm)	No.
1 pc		50 ... 6000	**3 842 993 139 / L**
1 pc	M12	60 ... 6000	**3 842 993 140 / L**
1 pc	M12 M12	110 ... 6000	**3 842 993 141 / L**
1 pc	D17 D17	80 ... 6000	**3 842 993 142 / L**
1 pc	D17V D17V	90 ... 6000	**3 842 993 225 / L**
8 pcs		6070	**3 842 537 824**

Profile finishing: M12: in all central holes
D17: in slots B/H, C/G, D/F
D17V: in slots A/E

Quick & Easy (p. 2-8, see fold-out section)

40x120L	3 842 993 716 / ...
Length L (mm)	50 ... 6000
Standard profile finishes (note minimum length,p.	M12 / D9,8 (B,C,D,F, G,H)[1)] / D17 (B,C,D,F, G,H)[1)] / DB17 / F1 (A,E)[1)]
Individual profile finishes (L_{max} = 5400 mm)	DI / DIS / MT / MTS / MI / MIS / DG[2)]

[1)] For the specified slots
[2)] DG_{max} = 45°; L_{min1} / L_{min2} = 439 / 578 mm

Cap	Color	ESD		No.
40x40 (1x)	Signal gray		100	**3 842 548 746**
40x80 (1x)	Signal gray		20	**3 842 548 748**
40x40 (1x)	Black		20	**3 842 548 747**
40x80 (1x)	Black		20	**3 842 548 749**
Material:	PP			

Notice:
For the 40x120L profile you require the following combination of cover caps: 1x 40x40 and 1x 40x80

40x160L

A = 20,5 cm2
I_x = 466,7 cm4
I_y = 37,2 cm4
W_x = 58,3 cm3
W_y = 18,6 cm3
m = 5,5 kg/m

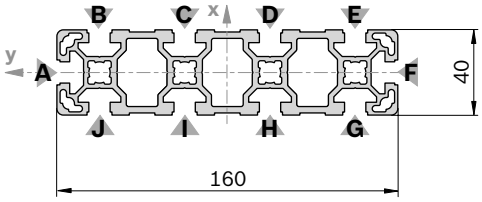

19215

Cap	Color	ESD		No.
40x80 (2x)	Signal gray		20	**3 842 548 748**
40x80 (2x)	Black		20	**3 842 548 749**
Material:	PP			

40x160L		L (mm)	No.
1 pc		50 ... 6000	**3 842 993 143 / L**
1 pc	M12	60 ... 6000	**3 842 993 144 / L**
1 pc	M12 M12	110 ... 6000	**3 842 993 145 / L**
1 pc	D17 D17	80 ... 6000	**3 842 993 146 / L**
6 pcs		6070	**3 842 529 345**

Profile finishing: M12: in all central holes
D17: in slots B/J, C/I, D/H, E/G

Quick & Easy (p. 2-8, see fold-out section)

40x160L	3 842 993 717 / ...
Length L (mm)	80 ... 6000
Standard profile finishes (note minimum length, p. 2-25)	M12 / D9,8 (B,C,D,E,G,H, I,J)[1] / D17 (B,C,D,E,G,H, I,J)[1] / DB17 / F1 (A,F)[1]
Individual profile finishes (L_{max} = 5400 mm)	DI / DIS / MT / MTS / MI / MIS / DG[2]

[1] For the specified slots
[2] DG_{max} = 45°; L_{min1} / L_{min2} = 439 / 578 mm

80x80L

A = 18,2 cm2
I_x = 132,1 cm4
I_y = 132,1 cm4
W_x = 33,0 cm3
W_y = 33,0 cm3
m = 4,9 kg/m

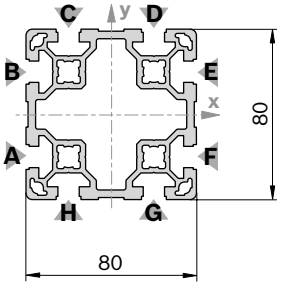

19216

Cap	Color	ESD		No.
80x80 (1x)	Signal gray		20	**3 842 548 750**
80x80 (1x)	Black		20	**3 842 548 751**
Material:	PP			

80x80L		L (mm)	No.
1 pc		50 ... 6000	**3 842 993 133 / L**
1 pc	M12	60 ... 6000	**3 842 993 134 / L**
1 pc	M12 M12	110 ... 6000	**3 842 993 147 / L**
1 pc	M12 D17	90 ... 6000	**3 842 993 148 / L**
1 pc	D17	60 ... 6000	**3 842 993 149 / L**
1 pc	D17 D17	80 ... 6000	**3 842 993 150 / L**
1 pc	D17 D17V	80 ... 6000	**3 842 993 151 / L**
6 pcs		6070	**3 842 529 347**

Profile finishing: M12: in all central holes
D17: in slots A/F, B/E
D17V: in slots C/H, D/G

Quick & Easy (p. 2-8, see fold-out section)

80x80L	3 842 993 674 / ...
Length L (mm)	50 ... 6000
Standard profile finishes (note minimum length, p. 2-25)	M12 / D9,8 / D17 / DB17 / F1
Individual profile finishes (L_{max} = 5400 mm)	DI / DIS / MT / MTS / MI / MIS / DG[1]

[1] DG_{max} = 45°; L_{min1} / L_{min2} = 439 / 578 mm

80x80L 4NVS

A = 19,3 cm²
I_x = 142,5 cm⁴
I_y = 142,5 cm⁴
W_x = 35,6 cm³
W_y = 35,6 cm³
m = 5,2 kg/m

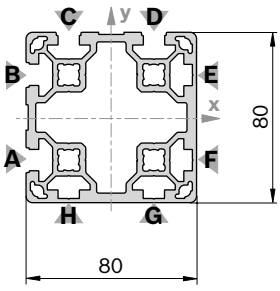

19416

Cap: See 80x80

80x80L 4NVS		L (mm)	No.
1 pc		50 ... 6000	**3 842 993 658 / L**
6 pcs		6070	**3 842 538 334**

Quick & Easy (p. 2-8, see fold-out section)

80x80L 4NVS	3 842 993 758 / ...
Length L (mm)	50 ... 6000
Standard profile finishes (note minimum length, p. 2-25)	M12 / D9.8 / D17 / DB17
Individual profile finishes (L_{max} = 5400 mm)	DI / DIS / MT / MTS / MI / MIS / DG[1)]

[1)] DG_{max} = 45°; L_{min1} / L_{min2} = 439 / 578 mm

80x80L 6N

A = 18,8 cm²
I_x = 134,1 cm⁴
I_y = 140,9 cm⁴
W_x = 33,5 cm³
W_y = 36,2 cm³
m = 5,1 kg/m

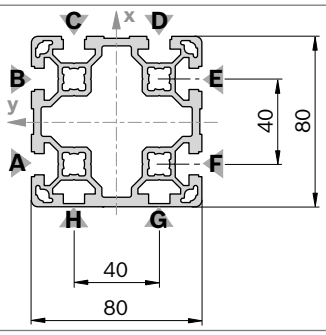

19417

Cap: see 80x80

80x80L 6N		L (mm)	No.
1 pc		50 ... 6000	**3 842 993 423 / L**
6 pcs		6070	**3 842 536 481**

Quick & Easy (p. 2-8, see fold-out section)

80x80L 6N	3 842 993 675 / ...
Length L (mm)	50 ... 6000
Standard profile finishes (note minimum length, p. 2-25)	M12 / D9,8 / D17 / DB17 / F1 (A,C,F)[1)]
Individual profile finishes (L_{max} = 5400 mm)	DI / DIS / MT / MTS / MI / MIS / DG[2)]

[1)] For the specified slots
[2)] DG_{max} = 45°; L_{min1} / L_{min2} = 439 / 578 mm

40x120x120L

A = 24,6 cm²
I_x = 318,0 cm⁴
I_y = 318,0 cm⁴
W_x = 42,2 cm³
W_y = 42,2 cm³
m = 6,7 kg/m

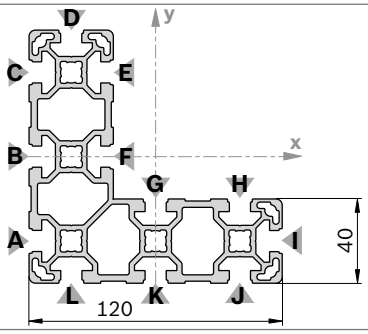

19418

40x120x120L		L (mm)	No.
1 pc		50 ... 6000	**3 842 993 653 / L**
4 pcs		6070	**3 842 538 287**

Quick & Easy (p. 2-8, see fold-out section)

40x120x120L	3 842 993 757 / ...
Length L (mm)	50 ... 6000
Standard profile finishes (note minimum length, p. 2-25)	M12 / D9,8 (B,C,J,K)[1)] / D17 / DB17 (A,B,C,D,I, J,K,L)[1)] / F1 (D,I)[1)]
Individual profile finishes (L_{max} = 5400 mm)	DI / DIS / MT / MTS / MI / MIS / DG[2)]

[1)] For the specified slots
[2)] DG_{max} = 45°; L_{min1} / L_{min2} = 420 / 540 mm

Cap	Color	ESD		No.
40x40 (5x)	Signal gray		100	**3 842 548 746**
40x80 (2x)	Signal gray		20	**3 842 548 748**
40x40 (1x)	Signal gray		100	**3 842 548 746**
40x40 (5x)	Black		20	**3 842 548 747**
40x80 (2x)	Black		20	**3 842 548 749**
40x40 (1x)	Black		20	**3 842 548 747**
Material:	PP			

Notice:
for the 40x120x120L profile you require the following combination of caps: 5x 40x40 or 2x 40x80 and 1x 40x40

80x120L

A = 25,6 cm²
I_x = 389,2 cm⁴
I_y = 192,8 cm⁴
W_x = 64,9 cm³
W_y = 48,2 cm³
m = 6,9 kg/m

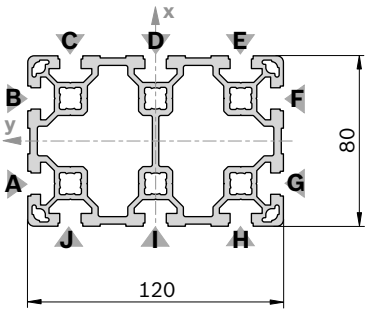

19419

80x120L			L (mm)	No.
	1 pc		50 ... 6000	**3 842 993 201 / L**
	1 pc	M12	60 ... 6000	**3 842 993 202 / L**
	1 pc	M12 M12	110 ... 6000	**3 842 993 203 / L**
	1 pc	D17 D17	80 ... 6000	**3 842 993 204 / L**
	1 pc	D17V D17V	90 ... 6000	**3 842 993 229 / L**
	4 pcs		6070	**3 842 537 828**

Profile finishing: M12: in all core holes
D17: in slots C/J, D/I, E/H
D17V: in slots A/G, B/F

Cap	Color	ESD		No.
80x120 (1x)	Signal gray		20	**3 842 548 792**
80x120 (1x)	Black		20	**3 842 548 793**
Material:	PP			

Quick & Easy (p. 2-8, see fold-out section)

80x120L	3 842 993 672 / ...
Length L (mm)	50 ... 6000
Standard profile finishes (note minimum length, p. 2-25)	M12 / D9,8 (C,D,E,H,I,J)[1] / D17 (C,D,E,H,I,J)[1] / DB17 / F1 (A,F)[1]
Individual profile finishes (L_{max} = 5400 mm)	DI / DIS / MT / MTS / MI / MIS / DG[2]

[1] For the specified slots
[2] DG_{max} = 45°; L_{min1} / L_{min2} = 439 / 578 mm

80x160L

A = 32,9 cm²
I_x = 850,7 cm⁴
I_y = 253,4 cm⁴
W_x = 106,3 cm³
W_y = 63,4 cm³
m = 8,9 kg/m

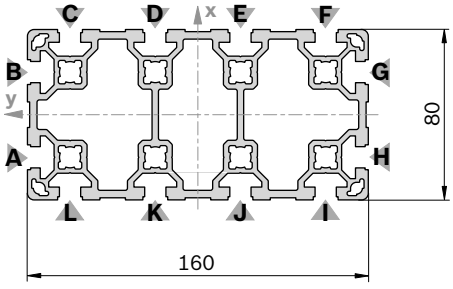

19420

80x160L			L (mm)	No.
	1 pc		50 ... 6000	**3 842 993 127 / L**
	1 pc	M12	60 ... 6000	**3 842 993 128 / L**
	1 pc	M12 M12	110 ... 6000	**3 842 993 152 / L**
	1 pc	M12 D17	90 ... 6000	**3 842 993 153 / L**
	1 pc	D17	60 ... 6000	**3 842 993 154 / L**
	1 pc	D17 D17	80 ... 6000	**3 842 993 155 / L**
	1 pc	D17V D17V	90 ... 6000	**3 842 993 226 / L**
	3 pcs		6070	**3 842 529 349**

Profile finishing: M12: in all core holes
D17: in slots C/L, D/K, E/J, F/I
D17V: in slots A/H, B/G

Cap	Color	ESD		No.
80x80 (2x)	Signal gray		20	**3 842 548 750**
80x80 (2x)	Black		20	**3 842 548 751**
Material:	PP			

Quick & Easy (p. 2-8, see fold-out section)

80x160L	3 842 993 673 / ...
Length L (mm)	80 ... 6000
Standard profile finishes (note minimum length, p. 2-25)	M12 / D9,8 (C,D,E,F,I,J,K,L)[1] / D17 (C,D,E,F,I,J,K,L)[1] / DB17 / F1 (A,G)[1]
Individual profile finishes (L_{max} = 5400 mm)	DI / DIS / MT / MTS / MI / MIS / DG[2]

[1] For the specified slots
[2] DG_{max} = 45°; L_{min1} / L_{min2} = 460 / 620 mm

45x45L

A = 6,0 cm²
I_x = 11,7 cm⁴
I_y = 11,7 cm⁴
W_x = 5,2 cm³
W_y = 5,2 cm³
m = 1,6 kg/m

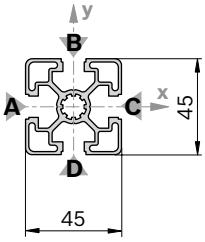

19421

45x45L			L (mm)	No.
	1 pc		50 ... 5600	**3 842 992 425 / L**
	1 pc	M12	60 ... 5600	**3 842 992 426 / L**
	1 pc	M12 M12	110 ... 5600	**3 842 992 427 / L**
	1 pc	M12 D17	90 ... 5600	**3 842 992 960 / L**
	1 pc	D9,8 D9,8	80 ... 5600	**3 842 992 967 / L**
	1 pc	D17	60 ... 5600	**3 842 992 953 / L**
	1 pc	D17 D17	80 ... 5600	**3 842 992 954 / L**
	1 pc	D17 D17V	80 ... 5600	**3 842 992 956 / L**
	20 pcs		5600	**3 842 511 702**

Cap	Color	ESD		No.
45x45 (1x)	Signal gray		100	**3 842 548 752**
45x45 (1x)	Black		20	**3 842 548 753**
Material:	PP			

Cap with hole	Color	ESD		No.
45x45 (1x)	Signal gray		20	**3 842 548 796**
45x45 (1x)	Black		20	**3 842 548 797**
Material:	PP			

Quick & Easy (p. 2-8, see fold-out section)

45x45L	3 842 993 737 / ...
Length L (mm)	50 ... 5600
Standard profile finishes (note minimum length, p. 2-25)	M12 / D9,8 / D17 / DB17 / F1 (A)[1]
Individual profile finishes (L_{max} = 4900 mm)	DI / DIS / MT / MTS / MI / MIS / DG[2]

[1] For the specified slots
[2] DG_{max} = 45°; L_{min1} / L_{min2} = 378 / 456 mm

45x45L 0N

A = 6,7 cm²
I_x = 13,5 cm⁴
I_y = 13,5 cm⁴
W_x = 6,0 cm³
W_y = 6,0 cm³
m = 1,8 kg/m

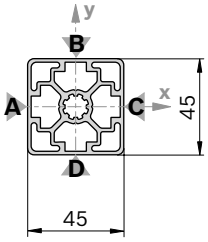

19422

Cap: see 45x45

45x45L 0N		L (mm)	No.
	20 pcs	6070	**3 842 540 955**

Quick & Easy (p. 2-8, see fold-out section)

45x45L 0N	3 842 993 761 / ...
Length L (mm)	50 ... 6000
Standard profile finishes (note minimum length, p. 2-25)	M12 / D9.8 / D17 / DB17
Individual profile finishes (L_{max} = 5400 mm)	DI / DIS / MT / MTS / MI / MIS / DG[1]

[1] DG_{max} = 45°; L_{min1} / L_{min2} = 378 / 456 mm

45x45L 1N

A = 6,5 cm2
I_x = 12,6 cm4
I_y = 13,5 cm4
W_x = 5,5 cm3
W_y = 6,0 cm3
m = 1,8 kg/m

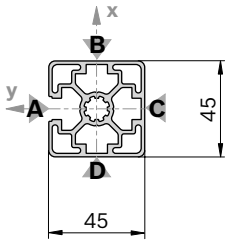

19423

Cap: see 45x45

45x45L 1N		L (mm)	No.
1 pc		50 ... 5600	**3 842 992 401 / L**
20 pcs		5600	**3 842 506 956**

Quick & Easy (p. 2-8, see fold-out section)

45x45L 1N	3 842 993 738 / ...
Length L (mm)	50 ... 5600
Standard profile finishes (note minimum length, p. 2-25)	M12 / D9.8 / D17 / DB17
Individual profile finishes (L_{max} = 4900 mm)	DI / DIS / MT / MTS / MI / MIS / DG[1)]

[1)] DG_{max} = 45°; L_{min1} / L_{min2} = 378 / 456 mm

45x45L 2N

A = 6,4 cm2
I_x = 11,6 cm4
I_y = 13,5 cm4
W_x = 5,2 cm3
W_y = 6,0 cm3
m = 1,7 kg/m

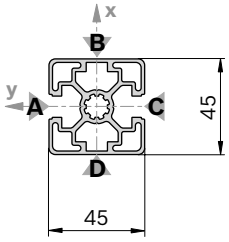

19424

Cap: see 45x45

45x45L 2N		L (mm)	No.
1 pc		50 ... 5600	**3 842 992 403 / L**
20 pcs		5600	**3 842 506 958**

Quick & Easy (p. 2-8, see fold-out section)

45x45L 2N	3 842 993 739 / ...
Length L (mm)	50 ... 5600
Standard profile finishes (note minimum length, p. 2-25)	M12 / D9.8 / D17 / DB17
Individual profile finishes (L_{max} = 4900 mm)	DI / DIS / MT / MTS / MI / MIS / DG[1)]

[1)] DG_{max} = 45°; L_{min1} / L_{min2} = 378 / 456 mm

45x45L 2NVS

A = 6,4 cm2
I_x = 12,6 cm4
I_y = 12,6 cm4
W_x = 5,6 cm3
W_y = 5,6 cm3
m = 1,7 kg/m

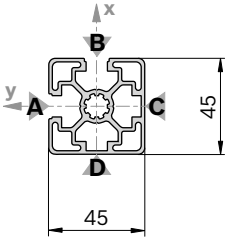

19425

Cap: see 45x45

45x45L 2NVS		L (mm)	No.
1 pc		50 ... 5600	**3 842 992 402 / L**
20 pcs		5600	**3 842 506 957**

Quick & Easy (p. 2-8, see fold-out section)

45x45L 2NVS	3 842 993 740 / ...
Length L (mm)	50 ... 5600
Standard profile finishes (note minimum length, p. 2-25)	M12 / D9.8 / D17 / DB17
Individual profile finishes (L_{max} = 4900 mm)	DI / DIS / MT / MTS / MI / MIS / DG[1)]

[1)] DG_{max} = 45°; L_{min1} / L_{min2} = 378 / 456 mm

45x45L 3N

A = 6,2 cm²
I_x = 12,6 cm⁴
I_y = 11,7 cm⁴
W_x = 5,4 cm³
W_y = 5,2 cm³
m = 1,7 kg/m

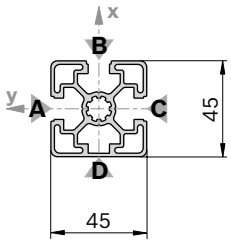

19426

Cap: see 45x45

45x45L 3N		L (mm)	No.
1 pc		50 ... 5600	**3 842 992 404 / L**
20 pcs		5600	**3 842 506 959**

Quick & Easy (p. 2-8, see fold-out section)

45x45L 3N	3 842 993 741 / ...
Length L (mm)	50 ... 5600
Standard profile finishes (note minimum length, p. 2-25)	M12 / D9.8 / D17 / DB17
Individual profile finishes (L_{max} = 4900 mm)	DI / DIS / MT / MTS / MI / MIS / DG[1)]

[1)] DG_{max} = 45°; L_{min1} / L_{min2} = 378 / 456 mm

45x30°

A = 6,9 cm²
I_x = 12,7 cm⁴
I_y = 15,2 cm⁴
W_x = 5,0 cm³
W_y = 5,3 cm³
m = 1,9 kg/m

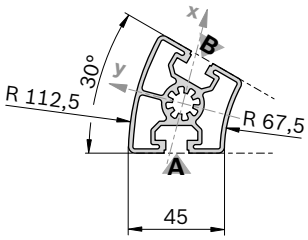

19427

45x30°		L (mm)	No.
1 pc		50 ... 5600	**3 842 993 013 / L**
20 pcs		5600	**3 842 524 040**

Quick & Easy (p. 2-8, see fold-out section)

45x30°	3 842 993 733 / ...
Length L (mm)	50 ... 5600
Standard profile finishes (note minimum length, p. 2-25)	M12
Individual profile finishes	–

Cap	Color	ESD		No.
45x30° (1x)	Black		20	**3 842 524 053**
Material:	PA			

45x45°

A = 7,6 cm²
I_x = 13,4 cm⁴
I_y = 21,4 cm⁴
W_x = 5,2 cm³
W_y = 6,4 cm³
m = 2,0 kg/m

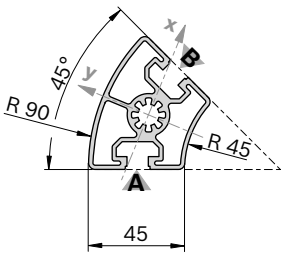

19428

45x45°		L (mm)	No.
1 pc		50 ... 5600	**3 842 993 014 / L**
20 pcs		5600	**3 842 524 043**

Quick & Easy (p. 2-8, see fold-out section)

45x45°	3 842 993 735 / ...
Length L (mm)	50 ... 5600
Standard profile finishes (note minimum length, p. 2-25)	M12
Individual profile finishes	–

Cap	Color	ESD		No.
45x45° (1x)	Black		20	**3 842 524 054**
Material:	PA			

45x60°

A = 6,8 cm²
I_x = 11,4 cm⁴
I_y = 16,9 cm⁴
W_x = 4,4 cm³
W_y = 5,2 cm³
m = 1,8 kg/m

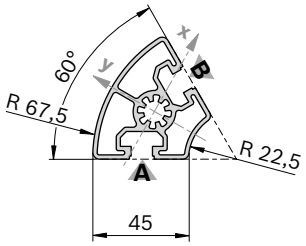

19429

45x60°		L (mm)	No.
1 pc		50 ... 5600	**3 842 993 015 / L**
20 pcs		5600	**3 842 524 046**

Quick & Easy (p. 2-8, see fold-out section)

45x60°	3 842 993 744 / ...
Length L (mm)	50 ... 5600
Standard profile finishes (note minimum length, p. 2-25)	M12
Individual profile finishes	–

Cap	Color	ESD		No.
45x60° (1x)	Black		20	**3 842 524 055**
Material:	PA			

45x45L R

A = 4,9 cm²
I_x = 8,6 cm⁴
I_y = 8,6 cm⁴
W_x = 5,0 cm³
W_y = 5,0 cm³
m = 1,3 kg/m

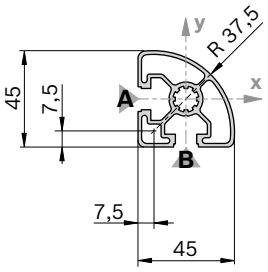

19430

45x45L R		L (mm)	No.
1 pc		50 ... 5600	**3 842 992 897 / L**
20 pcs		5600	**3 842 517 200**

Quick & Easy (p. 2-8, see fold-out section)

45x45L R	3 842 993 742 / ...
Length L (mm)	50 ... 5600
Standard profile finishes (note minimum length, p. 2-25)	M12 / DB17
Individual profile finishes	–

Cap	Color	ESD		No.
45x45 R (1x)	Signal gray		20	**3 842 548 800**
45x45 R (1x)	Black		20	**3 842 548 801**
Material:	PP			

45x45 HR

A = 6,6 cm²
I_x = 11,0 cm⁴
I_y = 10,7 cm⁴
W_x = 4,4 cm³
W_y = 4,8 cm³
m = 1,8 kg/m

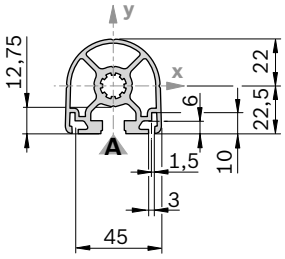

19431

45x45 HR		L (mm)	No.
1 pc		50 ... 5600	**3 842 992 945 / L**
1 pc	M12	60 ... 5600	**3 842 993 001 / L**
1 pc	M12 M12	110 ... 5600	**3 842 992 999 / L**
20 pcs		5600	**3 842 525 505**

Quick & Easy (p. 2-8, see fold-out section)

45x45 HR	3 842 993 736 / ...
Length L (mm)	50 ... 5600
Standard profile finishes (note minimum length, p. 2-25)	M12 / DB17
Individual profile finishes (L_{max} = 4900 mm)	DI / DIS / MT / MTS / MI / MIS / DG[1)]

[1)] DG_{max} = 45°; L_{min1} / L_{min2} = 378 / 456 mm

Cap	Color	ESD		No.
45x45 HR (1x)	Signal gray		20	**3 842 548 798**
45x45 HR (1x)	Black		20	**3 842 548 799**
Material:	PP			

45x45

A = 7,5 cm²
I_x = 13,8 cm⁴
I_y = 13,8 cm⁴
W_x = 6,1 cm³
W_y = 6,1 cm³
m = 2,0 kg/m

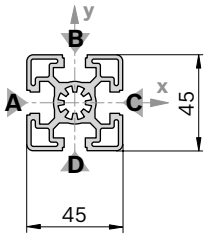

19432

Cap	Color	ESD		No.
45x45 (1x)	Signal gray		100	**3 842 548 752**
45x45 (1x)	Black		20	**3 842 548 753**
Material:	PP			

Cap with hole	Color	ESD		No.
45x45 (1x)	Signal gray		20	**3 842 548 796**
45x45 (1x)	Black		20	**3 842 548 797**
Material:	PP			

45x45			L (mm)	No.
	1 pc		50 ... 5600	**3 842 990 520 / L**
	1 pc	M12	60 ... 5600	**3 842 990 517 / L**
	1 pc	M12 M12	110 ... 5600	**3 842 990 518 / L**
	1 pc	M12 M16	180 ... 5600	**3 842 990 519 / L**
	1 pc	M12 D17	90 ... 5600	**3 842 990 640 / L**
	1 pc	M16	120 ... 5600	**3 842 990 521 / L**
	1 pc	M16 D17	170 ... 5600	**3 842 990 642 / L**
	1 pc	D9,8 D9,8	70 ... 5600	**3 842 992 969 / L**
	1 pc	D17	60 ... 5600	**3 842 990 648 / L**
	1 pc	D17 D17	80 ... 5600	**3 842 990 644 / L**
	1 pc	D17 D17V	80 ... 5600	**3 842 990 646 / L**
	20 pcs		5600	**3 842 509 175**

Quick & Easy (p. 2-8, see fold-out section)

45x45	3 842 993 734 / ...
Length L (mm)	50 ... 5600
Standard profile finishes (note minimum length, p. 2-25)	M12 / M16 / D9,8 / D17 / DB17
Individual profile finishes (L_{max} = 4900 mm)	DI / DIS / MT / MTS / MI / MIS / DG[1)]

[1)] DG_{max} = 45°; L_{min1} / L_{min2} = 378 / 456 mm

45x60

A = 11,0 cm²
I_x = 37,2 cm⁴
I_y = 22,7 cm⁴
W_x = 12,4 cm³
W_y = 10,1 cm³
m = 3,0 kg/m

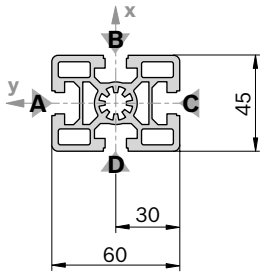

19433

Cap	Color	ESD		No.
45x60 (1x)	Signal gray		20	**3 842 548 754**
45x60 (1x)	Black		20	**3 842 548 755**
Material:	PP			

Cap with hole	Color	ESD		No.
45x60 (1x)	Signal gray		20	**3 842 548 802**
45x60 (1x)	Black		20	**3 842 548 803**
Material:	PP			

45x60		L (mm)	No.
1 pc		50 ... 5600	**3 842 990 570 / L**
1 pc	M12	60 ... 5600	**3 842 990 571 / L**
1 pc	M12 M12	110 ... 5600	**3 842 990 572 / L**
1 pc	M12 M16	180 ... 5600	**3 842 990 575 / L**
1 pc	M16	120 ... 5600	**3 842 990 573 / L**
1 pc	D9,8	50 ... 5600	**3 842 992 376 / L**
1 pc	D17	60 ... 5600	**3 842 990 688 / L**
1 pc	D17 D17	80 ... 5600	**3 842 990 672 / L**
1 pc	D17 D17V	80 ... 5600	**3 842 990 674 / L**
1 pc	D9,8V	50 ... 5600	**3 842 992 375 / L**
1 pc	D17V	60 ... 5600	**3 842 990 690 / L**
1 pc	D17V D17V	90 ... 5600	**3 842 990 670 / L**
1 pc	LF LF	80 ... 5600	**3 842 993 085 / L**
1 pc	F1 F1	80 ... 5600	**3 842 990 584 / L**
20 pcs		5600	**3 842 509 184**

Profile finishing
D9.8, D17: in slots B/D
D9.8, D17: in slots A/C
LF: in slots A/C
F1: in slot A

Quick & Easy (p. 2-8, see fold-out section)

45x60	3 842 993 743 / ...
Length L (mm)	50 ... 5600
Standard profile finishes (note minimum length,p.	M12 / M16 / D9.8 / D17 / DB17 / F1 (A,C)[1)]
Individual profile finishes (L_{max} = 4900 mm)	DI / DIS / MT / MTS / MI / MIS / DG[2)]

[1)] For the specified slots
[2)] DG_{max} = 45°; L_{min1} / L_{min2} = 404 / 508 mm

45x90SL

A = 9,0 cm²
I_x = 73,4 cm⁴
I_y = 18,1 cm⁴
W_x = 16,3 cm³
W_y = 8,0 cm³
m = 2,4 kg/m

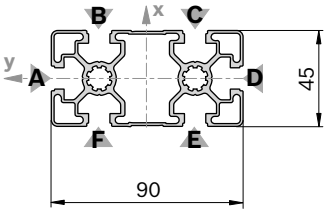

19434

Cap	Color	ESD		No.
45x90 (1x)	Signal gray		20	**3 842 548 756**
45x90 (1x)	Black		20	**3 842 548 757**
Material:	PP			

Cap with hole	Color	ESD		No.
45x90 (1x)	Signal gray		20	**3 842 548 804**
45x90 (1x)	Black		20	**3 842 548 805**
Material:	PP			

45x90SL		L (mm)	No.
1 pc		50 ... 6000	**3 842 993 450 / L**
12 pcs		6070	**3 842 537 102**

Quick & Easy (p. 2-8, see fold-out section)

45x90SL	3 842 993 759 / ...
Length L (mm)	50 ... 6000
Standard profile finishes (note minimum length, p. 2-25)	M12 / D9.8 / D17 / DB17
Individual profile finishes (L_{max} = 5400 mm)	DI / DIS / DG[1)]

[1)] DG_{max} = 45°; L_{min1} / L_{min2} = 456 / 612 mm

45x90L

A = 11,3 cm2
I_x = 82,0 cm4
I_y = 23,6 cm4
W_x = 18,2 cm3
W_y = 10,5 cm3
m = 3,0 kg/m

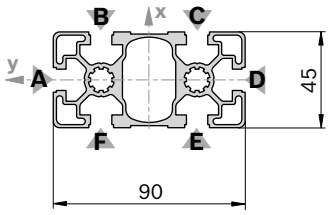

19435

45x90L			L (mm)	No.
	1 pc		50 ... 5600	**3 842 992 432 / L**
	1 pc	M12	60 ... 5600	**3 842 992 453 / L**
	1 pc	M12 M12	110 ... 5600	**3 842 992 433 / L**
	1 pc	D17 D17	80 ... 5600	**3 842 992 437 / L**
	1 pc	D17 D17V	80 ... 5600	**3 842 992 436 / L**
	1 pc	D17V	60 ... 5600	**3 842 992 452 / L**
	1 pc	D17V D17V	90 ... 5600	**3 842 992 435 / L**
	1 pc	LF LF	80 ... 5600	**3 842 993 084 / L**
	12 pcs		5600	**3 842 511 782**

Profile finishing:
M12: in all core holes
D17: in slots B/F, C/E
D17V: in slots A/D
LF: in slots A/D

Cap	Color	ESD		No.
45x90 (1x)	Signal gray		20	**3 842 548 756**
45x90 (1x)	Black		20	**3 842 548 757**
Material:	PP			

Cap with hole	Color	ESD		No.
45x90 (1x)	Signal gray		20	**3 842 548 804**
45x90 (1x)	Black		20	**3 842 548 805**
Material:	PP			

Quick & Easy (p. 2-8, see fold-out section)

45x90L	3 842 993 662 / ...
Length L (mm)	50 ... 5600
Standard profile finishes (note minimum length, p. 2-25)	M12 / D9.8 / D17 / DB17 / F1 (A,D)[1]
Individual profile finishes (L_{max} = 4900 mm)	DI / DIS / MT / MTS / MI / MIS / DG[2]

[1] For the specified slots
[2] DG_{max} = 45°; L_{min1} / L_{min2} = 456 / 612 mm

45x90L 2N

A = 12,0 cm2
I_x = 85,6 cm4
I_y = 26,9 cm4
W_x = 38,1 cm3
W_y = 6,0 cm3
m = 3,2 kg/m

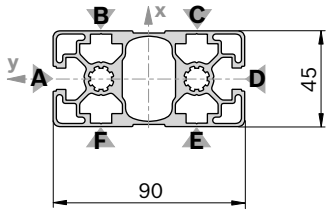

19436

Cap: see 45x90

45x90L 2N			L (mm)	No.
	1 pc		50 ... 6000	**3 842 993 644 / L**
	12 pcs		6070	**3 842 538 299**

Quick & Easy (p. 2-8, see fold-out section)

45x90L 2N	3 842 993 751 / ...
Length L (mm)	50 ... 6000
Standard profile finishes (note minimum length, p. 2-25)	M12 / D9.8 / D17 / DB17
Individual profile finishes (L_{max} = 5400 mm)	DI / DIS / MT / MTS / MI / MIS / DG[1]

[1] DG_{max} = 45°; L_{min1} / L_{min2} = 456 / 612 mm

45x90L 3NVS

A = 11,8 cm2
I_x = 87,2 cm4
I_y = 25,2 cm4
W_x = 38,8 cm3
W_y = 5,6 cm3
m = 3,2 kg/m

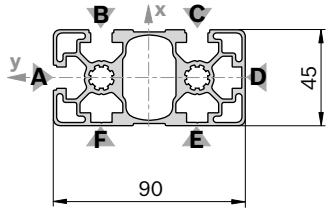

19437

Cap: see 45x90

45x90L 3NVS			L (mm)	No.
	1 pc		50 ... 6000	**3 842 993 635 / L**
	12 pcs		6070	**3 842 538 298**

Quick & Easy (p. 2-8, see fold-out section)

45x90L 3NVS	3 842 993 752 / ...
Length L (mm)	50 ... 6000
Standard profile finishes (note minimum length, p. 2-25)	M12 / D9.8 / D17 / DB17
Individual profile finishes (L_{max} = 5400 mm)	DI / DIS / MT / MTS / MI / MIS / DG[1]

[1] DG_{max} = 45°; L_{min1} / L_{min2} = 456 / 612 mm

45x90

A = 15,4 cm²
I_x = 124,6 cm⁴
I_y = 32,8 cm⁴
W_x = 27,7 cm³
W_y = 14,6 cm³
m = 4,2 kg/m

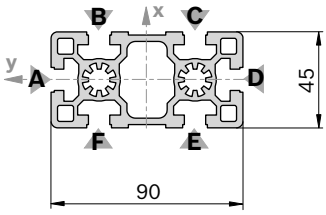

19438

Cap	Color	ESD		No.
45x90 (1x)	Signal gray		20	**3 842 548 756**
45x90 (1x)	Black		20	**3 842 548 757**
Material:	PP			

Cap with hole	Color	ESD		No.
45x90 (1x)	Signal gray		20	**3 842 548 804**
45x90 (1x)	Black		20	**3 842 548 805**
Material:	PP			

45x90			L (mm)	No.
1 pc			50 ... 5600	**3 842 990 300 / L**
1 pc	M12		60 ... 5600	**3 842 990 301 / L**
1 pc	M12	M12	110 ... 5600	**3 842 990 302 / L**
1 pc	M12	D17	90 ... 5600	**3 842 990 323 / L**
1 pc	M12	D17V	90 ... 5600	**3 842 990 305 / L**
1 pc	M16		120 ... 5600	**3 842 990 303 / L**
1 pc	M16	M16	240 ... 5600	**3 842 990 304 / L**
1 pc	M16	D17	170 ... 5600	**3 842 990 325 / L**
1 pc	M16	D17V	170 ... 5600	**3 842 990 307 / L**
1 pc	D17		60 ... 5600	**3 842 990 329 / L**
1 pc	D17	D17	80 ... 5600	**3 842 990 313 / L**
1 pc	D17	D17V	90 ... 5600	**3 842 990 311 / L**
1 pc	D17V		60 ... 5600	**3 842 990 331 / L**
1 pc	D17V	D17V	90 ... 5600	**3 842 990 309 / L**
12 pcs			5600	**3 842 509 186**

Profile finishing: M12, M16: in all core holes
D17: in slots B/F, C/E
D17V: in slots A/D

Quick & Easy (p. 2-8, see fold-out section)

45x90	3 842 993 661 / ...
Length L (mm)	50 ... 5600
Standard profile finishes (note minimum length, p. 2-25)	M12 / M16 / D9.8 / D17 / DB17 / F1 (A,D)[1]
Individual profile finishes (L_{max} = 4900 mm)	DI / DIS / MT / MTS / MI / MIS / DG[2]

[1] For the specified slots
[2] DG_{max} = 45°; L_{min1} / L_{min2} = 456 / 612 mm

45x180

A = 25,5 cm²
I_x = 766,7 cm⁴
I_y = 57,3 cm⁴
W_x = 85,2 cm³
W_y = 25,5 cm³
m = 6,9 kg/m

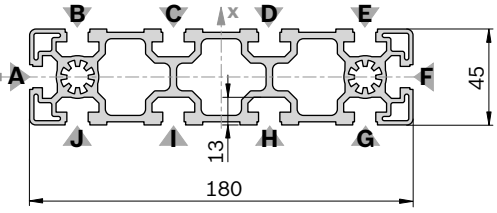

19439

Cap	Color	ESD		No.
45x180 (1x)	Signal gray		20	**3 842 548 794**
45x180 (1x)	Black		20	**3 842 548 795**
Material:	PP			

45x180			L (mm)	No.
1 pc			50 ... 5600	**3 842 990 335 / L**
1 pc	M12		60 ... 5600	**3 842 990 336 / L**
1 pc	M12	M12	110 ... 5600	**3 842 990 339 / L**
1 pc	D17	D17	80 ... 5600	**3 842 990 342 / L**
1 pc	D17V	D17V	90 ... 5600	**3 842 990 344 / L**
6 pcs			5600	**3 842 509 187**

Profile finishing: M12: in all core holes
D17: in slots B/J, E/G
D17V: in slots A/F

Quick & Easy (p. 2-8, see fold-out section)

45x180	3 842 993 731 / ...
Length L (mm)	80 ... 5600
Standard profile finishes (note minimum length, p. 2-25)	M12 / M16 / D9,8 (B,C,D,E,G,H,I,J)[1] / D17 (B,C,D,E,G,H,I,J)[1] / DB17 / F1 (A,F)[1]
Individual profile finishes (L_{max} = 4900 mm)	DI / DIS / MT / MTS / MI / MIS / DG[2]

[1] For the specified slots
[2] DG_{max} = 30°; L_{min1} / L_{min2} = 404 / 508 mm

45x270

A = 61,9 cm²
I_x = 3962,0 cm⁴
I_y = 118,0 cm⁴
W_x = 300,2 cm³
W_y = 61,6 cm³
m = 16,7 kg/m

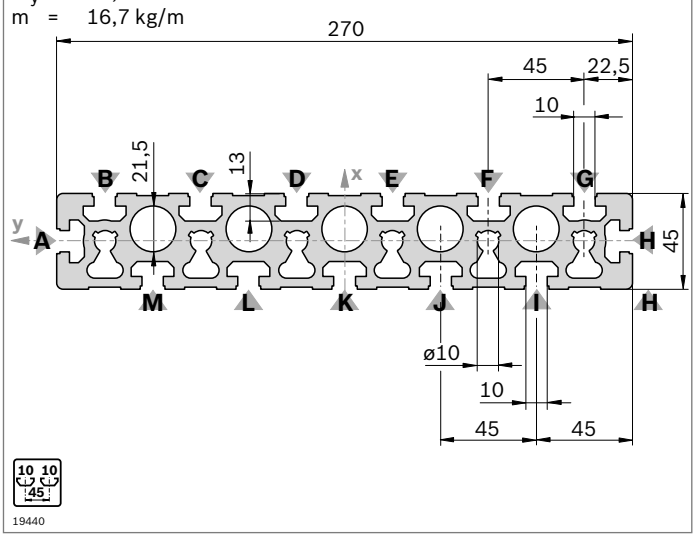

45x270		L (mm)	No.
1 pc		50 ... 5600	**3 842 992 927 / L**
1 pc	M12 M12	110 ... 5600	**3 842 992 928 / L**
2 pcs		5600	**3 842 520 025**

Profile finishing: M12: in core holes with C, F slots

Quick & Easy (p. 2-8, see fold-out section)

45x270	3 842 993 732 / ...
Length L (mm)	80 ... 5600
Standard profile finishes (note minimum length, p. 2-25)	M12 / D9,8 (B,C,D,E,F,G, I,J,K,L,M)[1] / D17 (B,C,D,E,F,G,I,J,K,L,M)[1] / DB17 / F1 (A,H)[1]
Individual profile finishes (L_{max} = 4900 mm)	DI / DIS / MT / MTS / MI / MIS

[1] For the specified slots

Cap	Color	ESD		No.
45x90 (3x)	Signal gray		20	**3 842 548 756**
45x90 (3x)	Black		20	**3 842 548 757**
Material:	PP			

45x90x90L

A = 21,2 cm²
I_x = 152,1 cm⁴
I_y = 152,1 cm⁴
W_x = 19,1 cm³
W_y = 32,6 cm³
m = 5,7 kg/m

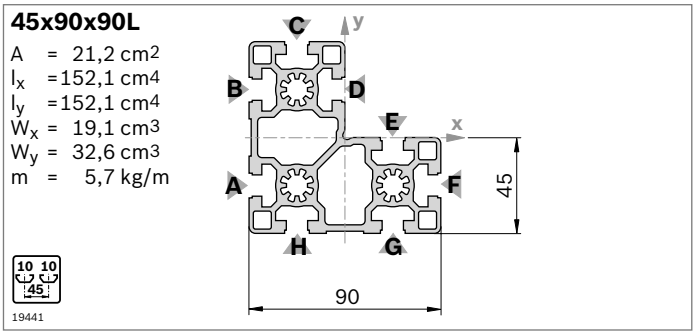

45x90x90L		L (mm)	No.
1 pc		50 ... 6000	**3 842 992 387 / L**
1 pc	M12	60 ... 6000	**3 842 992 388 / L**
8 pcs		6070	**3 842 537 823**

Profile finishing: M12: in the central bore at the intersection of slots A and H

Quick & Easy (p. 2-8; see fold-out section)

45x90x90L	3 842 993 682 / ...
Length L (mm)	50 ... 6000
Standard profile finishes (note minimum length, p. 2-25)	M12 / D9.8 / D17 / DB17 (A,B,C,F,G,H)[1]
Individual profile finishes (L_{max} = 5400 mm)	DI / DIS / MT / MTS / MI / MIS / DG[2]

[1] For the specified slots
[2] DG_{max} = 45°; L_{min1} / L_{min2} = 456 / 612 mm

Cap	Color	ESD		No.
45x90x90 (1x)	Signal gray		20	**3 842 548 806**
45x90x90 (1x)	Black		20	**3 842 548 807**
Material:	PP			

Cap with hole[1]	Color	ESD		No.
45x90x90 (1x)	Signal gray		20	**3 842 548 806**
45x90x90 (1x)	Black		20	**3 842 548 807**
Material:	PP			

[1] The cover cap is also suitable for use with a hole, which can be broken out.

45x90x90L 4N

A = 21,2 cm²
I_x = 160,8 cm⁴
I_y = 160,8 cm⁴
W_x = 30,6 cm³
W_y = 30,6 cm³
m = 5,95 kg/m

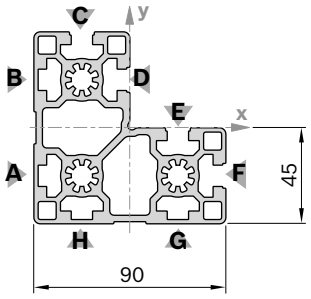

29432

Cap: see 45x90x90L

45x90x90L 4N		L (mm)	No.
8 pcs		6070	**3 842 547 827**

Quick & Easy (p. 2-8, see fold-out section)

45x90x90L 4N	3 842 993 764
Length L (mm)	50 ... 6070
Standard profile finishes (note minimum length, p. 2-25)	M12 / D9,8 / D17 / DB17 (A,B,C,F,G,H)[1]
Individual profile finishes (L_{max} = 5400 mm)	DI / DIS / MT / MTS / MI / MIS / DG[2]

[1] For the specified slots
[2] DG_{max} = 45°; L_{min1} / L_{min2} = 456 / 612 mm

90x90SL

A = 14,1 cm2
I_x = 130,2 cm4
I_y = 130,2 cm4
W_x = 28,9 cm3
W_y = 28,9 cm3
m = 3,8 kg/m

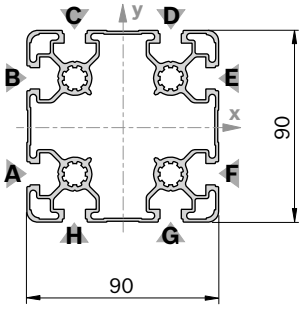

19442

Cap: see 90x90L

90x90SL		L (mm)	No.
1 pc		50 ... 6000	**3 842 993 449 / L**
6 pcs		6070	**3 842 537 100**

Quick & Easy (p. 2-8, see fold-out section)

90x90SL	3 842 993 681 / ...
Length L (mm)	50 ... 6000
Standard profile finishes (note minimum length, p. 2-25)	M12 / D9.8 / D17 / DB17
Individual profile finishes (L_{max} = 5400 mm)	DI / DIS / DG[1]

[1] DG_{max} = 45°; L_{min1} / L_{min2} = 456 / 612 mm

90x90L

A = 24,1 cm2
I_x = 211,1 cm4
I_y = 211,1 cm4
W_x = 46,9 cm3
W_y = 46,9 cm3
m = 6,5 kg/m

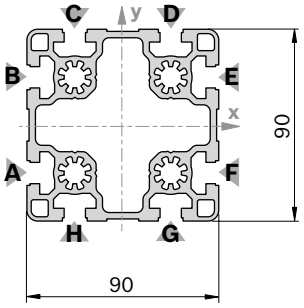

19443

Cap	Color	ESD		No.
90x90L (1x)	Signal gray		20	**3 842 548 758**
90x90L (1x)	Black		20	**3 842 548 759**
Material:	PP			

90x90L			L (mm)	No.
1 pc			50 ... 5600	**3 842 992 415 / L**
1 pc	M12		60 ... 5600	**3 842 992 416 / L**
1 pc	M12	M12	110 ... 5600	**3 842 992 422 / L**
1 pc	M12	D17	90 ... 5600	**3 842 992 423 / L**
1 pc	D17		60 ... 5600	**3 842 992 417 / L**
1 pc	D17	D17	80 ... 5600	**3 842 992 420 / L**
1 pc	D17	D17V	80 ... 5600	**3 842 992 421 / L**
1 pc	LF	LF	80 ... 5600	**3 842 992 418 / L**
1 pc	LF	M12	90 ... 5600	**3 842 992 419 / L**
6 pcs			5600	**3 842 509 658**

Profile finishing:
M12: in all central holes
D17: in slots C/H, D/G
D17V: in slots A/F, B/E
LF: in slots C/H, D/G

Quick & Easy (p. 2-8, see fold-out section)

90x90L	3 842 993 680 / ...
Length L (mm)	50 ... 5600
Standard profile finishes (note minimum length, p. 2-25)	M12 / D9.8 / D17 / DB17
Individual profile finishes (L_{max} = 4900 mm)	DI / DIS / MT / MTS / MI / MIS / DG[1]

[1] DG_{max} = 45°; L_{min1} / L_{min2} = 456 / 612 mm

90x90L 4N

A = 24,2 cm²
I_x = 227,4 cm⁴
I_y = 214,7 cm⁴
W_x = 50,5 cm³
W_y = 47,7 cm³
m = 6,5 kg/m

19444

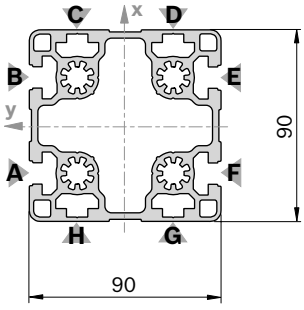

Cap: see 90x90L

90x90L 4N		L (mm)	No.
1 pc		50 ... 6000	**3 842 993 628 / L**
6 pcs		6070	**3 842 538 297**

Quick & Easy (p. 2-8, see fold-out section)

90x90L 4N	3 842 993 755 / ...
Length L (mm)	50 ... 5600
Standard profile finishes (note minimum length, p. 2-25)	M12 / D9.8 / D17 / DB17
Individual profile finishes (L_{max} = 4900 mm)	DI / DIS / MT / MTS / MI / MIS / DG[1)]

[1)] DG_{max} = 45°; L_{min1} / L_{min2} = 456 / 612 mm

90x90L 4NVS

A = 24,2 cm²
I_x = 220,9 cm⁴
I_y = 220,9 cm⁴
W_x = 49,2 cm³
W_y = 49,2 cm³
m = 6,5 kg/m

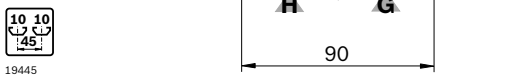

19445

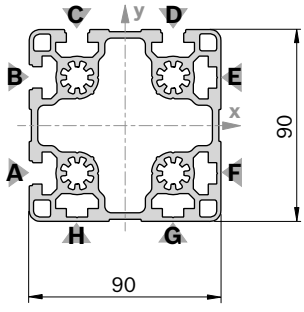

Cap: see 90x90L

90x90L 4NVS		L (mm)	No.
1 pc		50 ... 6000	**3 842 993 621 / L**
6 pcs		6070	**3 842 538 296**

Quick & Easy (p. 2-8, see fold-out section)

90x90L 4NVS	3 842 993 756 / ...
Length L (mm)	50 ... 5600
Standard profile finishes (note minimum length, p. 2-25)	M12 / D9.8 / D17 / DB17
Individual profile finishes (L_{max} = 4900 mm)	DI / DIS / MT / MTS / MI / MIS / DG[1)]

[1)] DG_{max} = 45°; L_{min1} / L_{min2} = 456 / 612 mm

90x90

A = 38,4 cm²
I_x = 299,8 cm⁴
I_y = 299,8 cm⁴
W_x = 66,7 cm³
W_y = 66,7 cm³
m = 10,4 kg/m

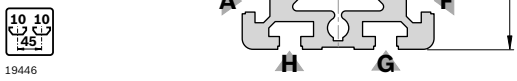

19446

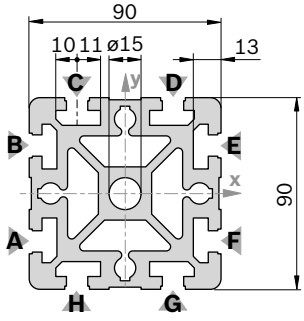

90x90		L (mm)	No.
1 pc		50 ... 5600	**3 842 990 500 / L**
1 pc	M16	120 ... 5600	**3 842 990 501 / L**
1 pc	M16 M16	240 ... 5600	**3 842 990 502 / L**
1 pc	M16 D17	170 ... 5600	**3 842 992 961 / L**
1 pc	M16/ D22	60 ... 5600	**3 842 992 373 / L**
1 pc	M16/ D22 M16/ D22	120 ... 5600	**3 842 993 083 / L**
1 pc	D17	60 ... 5600	**3 842 990 092 / L**
1 pc	D17 D17	80 ... 5600	**3 842 990 093 / L**
1 pc	D17 D17V	80 ... 5600	**3 842 990 094 / L**
1 pc	LF LF	80 ... 5600	**3 842 993 082 / L**
1 pc	F2	60 ... 5600	**3 842 990 505 / L**
1 pc	F2 F2	110 ... 5600	**3 842 990 507 / L**
6 pcs		5600	**3 842 509 189**

Cap	Color	ESD		No.
90x90 (1x)	Signal gray		20	**3 842 548 760**
90x90 (1x)	Black		20	**3 842 548 761**
Material:	PP			

Cap with hole	Color	ESD		No.
90x90 (1x)	Signal gray		20	**3 842 548 814**
90x90 (1x)	Black		20	**3 842 548 815**
Material:	PP			

Note: A quick connector cannot be used

Quick & Easy (p. 2-8, see fold-out section)

90x90	3 842 993 679 / ...
Length L (mm)	50 ... 5600
Standard profile finishes (note minimum length, p. 2-25)	M16 / D9.8 / D17 / DB17 / F1
Individual profile finishes (L_{max} = 4900 mm)	DI / DIS / MT / MTS / MI / MIS / DG[1)]

[1)] DG_{max} = 45°; L_{min1} / L_{min2} = 456 / 612 mm

90x180L

A = 42,8 cm²
I_x = 1380,0 cm⁴
I_y = 401,0 cm⁴
W_x = 153,3 cm³
W_y = 89,1 cm³
m = 11,6 kg/m

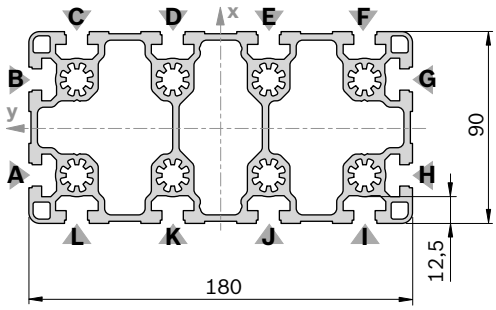

19447

90x180L			L (mm)	No.
	1 pc		50 ... 5600	**3 842 992 857 / L**
	1 pc	M12	60 ... 5600	**3 842 992 858 / L**
	1 pc	M12 M12	110 ... 5600	**3 842 992 859 / L**
	1 pc	M1 LF	90 ... 5600	**3 842 992 860 / L**
	1 pc	D17V D17V	90 ... 5600	**3 842 992 864 / L**
	1 pc	LF LF	80 ... 5600	**3 842 992 861 / L**
	3 pcs		5600	**3 842 516 015**

Profile finishing: M12: in all core holes
D17V: in slots A/H, B/G
LF: in slots A/H, B/G

Cap	Color	ESD		No.
90x90L (2x)	Signal gray		20	**3 842 548 758**
90x90L (2x)	Black		20	**3 842 548 759**
Material:	PP			

Quick & Easy (p. 2-8, see fold-out section)

90x180L	3 842 993 677 / ...
Length L (mm)	80 ... 5600
Standard profile finishes (note minimum length, p. 2-25)	M12 / D9,8 (C,D,E,F,I,J,K,L)[1] / D17 (C,D,E,F,I,J,K,L)[1] / DB17 / F1 (A,G)[1]
Individual profile finishes (L_{max} = 4900 mm)	DI / DIS / MT / MTS / MI / MIS / DG[2]

[1] For the specified slots
[2] DG_{max} = 30°; L_{min1} / L_{min2} = 404 / 508 mm

90x180

A = 63,6 cm²
I_x = 2138,3 cm⁴
I_y = 544,3 cm⁴
W_x = 237,6 cm³
W_y = 121,0 cm³
m = 17,2 kg/m

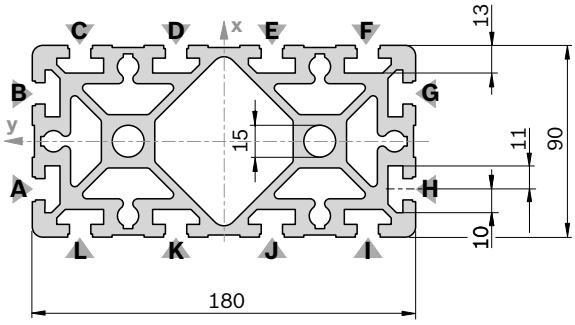

19448

90x180			L (mm)	No.
	1 pc		50 ... 5600	**3 842 990 416 / L**
	1 pc	M16	120 ... 5600	**3 842 990 417 / L**
	1 pc	M16 M16	240 ... 5600	**3 842 990 418 / L**
	1 pc	M16 F2	170 ... 5600	**3 842 990 419 / L**
	1 pc	D17V D17V	90 ... 5600	**3 842 992 378 / L**
	1 pc	LF LF	80 ... 5600	**3 842 992 898 / L**
	1 pc	LF-S LF-S	80 ... 5600	**3 842 993 081 / L**
	1 pc	F2 F2	110 ... 5600	**3 842 990 421 / L**
	3 pcs		5600	**3 842 509 188**

Profile finishing: M16: in all core holes
D17V: in slots A/H, B/G
LF: in slots A/H, B/G
LF-S: in slots D/K, E/J

Quick & Easy (p. 2-8, see fold-out section)

90x180	3 842 993 676 / ...
Length L (mm)	80 ... 5600
Standard profile finishes (note minimum length, p. 2-25)	M16 / D9,8 (C,D,E,F,I,J,K,L)[1] / D17 (C,D,E,F,I,J,K,L)[1] / DB17 / F1 (A,G)[1]
Individual profile finishes (L_{max} = 4900 mm)	DI / DIS / MT / MTS / MI / MIS / DG[2]

[1] For the specified slots
[2] DG_{max} = 30°; L_{min1} / L_{min2} = 404 / 508 mm

Notice: A quick connector cannot be used with profile 90x180

Cap	Color	ESD		No.
90x90 (2x)	Signal gray		20	**3 842 548 760**
90x90 (2x)	Black		20	**3 842 548 761**
Material:	PP			

Cap with hole	Color	ESD		No.
90x90 (2x)	Signal gray		20	**3 842 548 814**
90x90 (2x)	Black		20	**3 842 548 815**
Material:	PP			

90x360

A = 90,2 cm²
I_x = 14065,0 cm⁴
I_y = 710,0 cm⁴
W_x = 781,4 cm³
W_y = 157,7 cm³
m = 24,4 kg/m

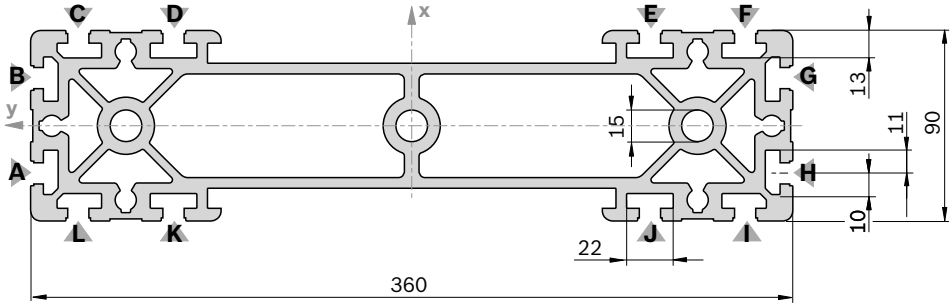

19449

Cap	Color	ESD		No.
90x90 (2x)	Signal gray		20	**3 842 548 760**
90x90 (2x)	Black		20	**3 842 548 761**
Material:	PP			

Cap with hole	Color	ESD		No.
90x90 (2x)	Signal gray		20	**3 842 548 814**
90x90 (2x)	Black		20	**3 842 548 815**
Material:	PP			

Note: A quick connector cannot be used

90x360		L (mm)	No.
		50 ... 6000	**3 842 993 434**
	M16 M16	240 ... 6000	**3 842 993 435 / L**
	F2 F2	110 ... 6000	**3 842 993 436 / L**

Profile finishing: M16: in all core holes

Quick & Easy (p. 2-8, see fold-out section)

90x360	3 842 993 678 / ...
Length L (mm)	80 ... 6000
Standard profile finishes (note minimum length, p. 2-25)	M16 / D9,8 (C,D,E,F,I,J, K,L)[1] / D17 (C,D,E,F,I,J, K,L)[1] / DB17 / F1 (A,G)[1]
Individual profile finishes (L_{max} = 5400 mm)	DI / DIS / MT / MTS / MI / MIS

[1] For the specified slots

15x22,5

A = 1,3 cm²
I_x = 0,8 cm⁴
I_y = 0,3 cm⁴
W_x = 0,9 cm³
W_y = 0,6 cm³
m = 0,3 kg/m

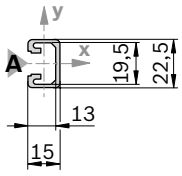

19450

Cap	Color	ESD		No.
15x22.5 (1x)	Signal gray		20	**3 842 548 816**
15x22.5 (1x)	Black		20	**3 842 548 817**
Material:	PP			

15x22.5		L (mm)	No.
1 pc		50 ... 3000	**3 842 992 473 / L**
1 pc	D17	60 ... 3000	**3 842 992 474 / L**
1 pc	D17 D17	80 ... 3000	**3 842 992 475 / L**
10 pcs		2000	**3 842 513 576**

Quick & Easy (p. 2-8, see fold-out section)

15x22.5	3 842 993 689 / ...
Length L (mm)	50 ... 2000
Standard profile finishes (note minimum length, p. 2-25)	D9.8 / D17
Individual profile finishes	–

15x180

A = 11,6 cm²
I_x = 321,7 cm⁴
I_y = 3,2 cm⁴
W_x = 35,7 cm³
W_y = 4,2 cm³
m = 3,1 kg/m

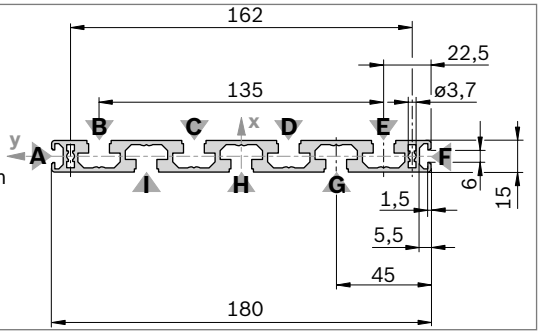

Cap	Color	ESD		No.
15x180 (1x)	Signal gray		20	**3 842 548 772**
15x180 (1x)	Black		20	**3 842 548 773**
Material:	PP			

15x180		L (mm)	No.
1 pc		50 ... 5600	**3 842 993 079 / L**
6 pcs		5600	**3 842 526 821**

Quick & Easy (p. 2-8, see fold-out section)

15x180	3 842 993 686 / ...
Length L (mm)	80 ... 5600
Standard profile finishes (note minimum length, p. 2-25)	D9,8 (B,C,D,E,G,H,I)[1] / D17 (B,C,D,E,G,H,I)[1]
Individual profile finishes (L_{max} = 4900 mm)	DI / DIS / MT / MTS / MI / MIS

[1] For the specified slots

22,5x45

A = 4,7 cm²
I_x = 7,1 cm⁴
I_y = 2,9 cm⁴
W_x = 3,2 cm³
W_y = 2,6 cm³
m = 1,3 kg/m

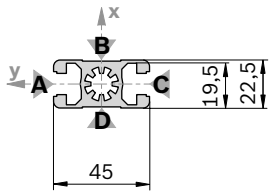

Cap	Color	ESD		No.
22.5x45 (1x)	Signal gray		20	**3 842 548 830**
22.5x45 (1x)	Black		20	**3 842 548 831**
Material:	PP			

22.5x45		L (mm)	No.
1 pc		50 ... 6000	**3 842 990 292 / L**
1 pc	M12	60 ... 6000	**3 842 990 087 / L**
1 pc	M12 M12	110 ... 6000	**3 842 990 090 / L**
1 pc	D17V D17V	80 ... 6000	**3 842 990 091 / L**
24 pcs		6070	**3 842 537 812**

Quick & Easy (p. 2-8, see fold-out section)

22.5x45	3 842 993 700 / ...
Length L (mm)	50 ... 6000
Standard profile finishes (note minimum length, p. 2-25)	M12 / D9.8 (A,C)[1] / D17 / DB17 (A,C)[1]
Individual profile finishes (L_{max} = 5400 mm)	DI / DIS / MT / MTS / MI / MIS / DG[2]

[1] For the specified slots
[2] DG_{max} = 45°; L_{min1} / L_{min2} = 378 / 456 mm

22,5x180

A = 21,6 cm²
I_x = 581,0 cm⁴
I_y = 11,8 cm⁴
W_x = 66,8 cm³
W_y = 14,7 cm³
m = 5,8 kg/m

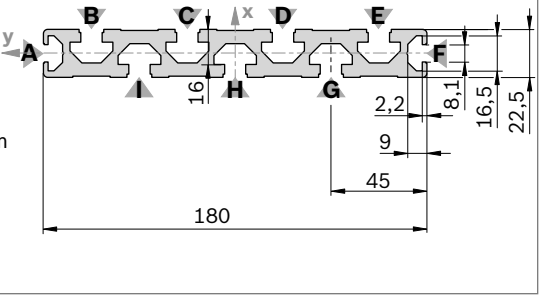

Cap	Color	ESD		No.
22.5x180 (1x)	Signal gray		20	**3 842 548 770**
22.5x180 (1x)	Black		20	**3 842 548 771**
Material:	PP			

22.5x180		L (mm)	No.
1 pc		50 ... 5600	**3 842 990 345 / L**
1 pc	D28	60 ... 5600	**3 842 990 346 / L**
1 pc	D28 D28	110 ... 5600	**3 842 990 347 / L**
6 pcs		5600	**3 842 509 179**

Profile finishing: D28: in slots G, I

Quick & Easy (p. 2-8, see fold-out section)

22.5x180	3 842 993 699 / ...
Length L (mm)	80 ... 5600
Standard profile finishes (note minimum length, p. 2-25)	D9.8 (B,C,D,E,G,H,I)[1] / D17 (B,C,D,E,G,H,I)[1]
Individual profile finishes (L_{max} = 4900 mm)	DI / DIS / MT / MTS / MI / MIS

[1] For the specified slots

50x50L

A = 9,3 cm2
I_x = 21,2 cm4
I_y = 21,2 cm4
W_x = 8,5 cm3
W_y = 8,5 cm3
m = 2,5 kg/m

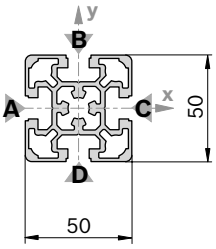

19454

Cap	Color	ESD		No.
50x50 (1x)	Signal gray		20	**3 842 548 820**
50x50 (1x)	Black		20	**3 842 548 821**
Material:	PP			

Cap with hole	Color	ESD		No.
50x50 (1x)	Signal gray		20	**3 842 548 822**
50x50 (1x)	Black		20	**3 842 548 823**
Material:	PP			

50x50L			L (mm)	No.
	1 pc		50 ... 6000	**3 842 993 156 / L**
	1 pc	M12	60 ... 6000	**3 842 993 157 / L**
	1 pc	M12 M12	110 ... 6000	**3 842 993 158 / L**
	1 pc	M12 D17	90 ... 6000	**3 842 993 159 / L**
	1 pc	D9,8 D9,8	80 ... 6000	**3 842 993 164 / L**
	1 pc	D17	60 ... 6000	**3 842 993 160 / L**
	1 pc	D17 D17	80 ... 6000	**3 842 993 161 / L**
	1 pc	D17 D17V	80 ... 6000	**3 842 993 162 / L**
	20 pcs		6070	**3 842 529 351**

Quick & Easy (p. 2-8, see fold-out section)

50x50L	3 842 993 665 / ...
Length L (mm)	50 ... 6000
Standard profile finishes (note minimum length, p. 2-25)	M12 / M16 / D9,8 / D17 / DB17
Individual profile finishes (L_{max} = 5400 mm)	DI / DIS / MT / MTS / MI / MIS / DG[1)]

[1)] DG_{max} = 45°; L_{min1} / L_{min2} = 387 / 474 mm

50x100L

A = 17,2 cm2
I_x = 162,8 cm4
I_y = 42,6 cm4
W_x = 32,6 cm3
W_y = 17,0 cm3
m = 4,6 kg/m

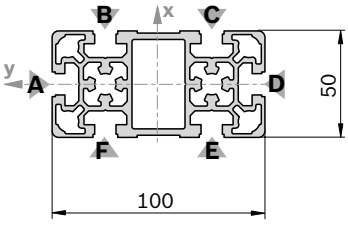

19455

Cap	Color	ESD		No.
50x50 (2x)	Signal gray		20	**3 842 548 820**
50x50 (2x)	Black		20	**3 842 548 821**
Material:	PP			

Cap with hole	Color	ESD		No.
50x50 (2x)	Signal gray		20	**3 842 548 822**
50x50 (2x)	Black		20	**3 842 548 823**
Material:	PP			

50x100L			L (mm)	No.
	1 pc		50 ... 6000	**3 842 993 163 / L**
	1 pc	M12	60 ... 6000	**3 842 993 165 / L**
	1 pc	M12 M12	110 ... 6000	**3 842 993 166 / L**
	1 pc	D17 D17	90 ... 6000	**3 842 993 167 / L**
	1 pc	D17 D17V	80 ... 6000	**3 842 993 168 / L**
	1 pc	D17V	60 ... 6000	**3 842 993 169 / L**
	1 pc	D17V D17V	90 ... 6000	**3 842 993 170 / L**
	10 pcs		6070	**3 842 537 825**

Profile finishing: M12: in all core holes
D17: in slots B/F, C/E
D17V: in slot A/D

Quick & Easy (p. 2-8, see fold-out section)

50x100L	3 842 993 663 / ...
Length L (mm)	50 ... 6000
Standard profile finishes (note minimum length, p. 2-25)	M12 / M16 / D9,8 / D17 / DB17 / F1 (A, D)[1)]
Individual profile finishes (L_{max} = 5400 mm)	DI / DIS / MT / MTS / MI / MIS / DG[2)]

[1)] For the specified slots
[2)] DG_{max} = 45°; L_{min1} / L_{min2} = 474 / 648 mm

50x150L

A = 25,8 cm2
I_x = 540,0 cm4
I_y = 64,2 cm4
W_x = 72,0 cm3
W_y = 25,7 cm3
m = 6,9 kg/m

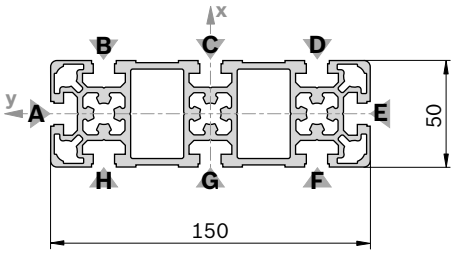

19456

Cap	Color	ESD		No.
50x150 (1x)	Signal gray		20	**3 842 548 818**
50x150 (1x)	Black		20	**3 842 548 819**
Material:	PP			

50x150L		L (mm)	No.
	1 pc	50 ... 6000	**3 842 993 196 / L**
	1 pc M12	60 ... 6000	**3 842 993 194 / L**
	1 pc M12 M12	110 ... 6000	**3 842 993 199 / L**
	1 pc D17 D17	80 ... 6000	**3 842 993 200 / L**
	1 pc D17V D17V	90 ... 6000	**3 842 993 228 / L**
	4 pcs	6070	**3 842 537 826**

Profile finishing: M12: in all core holes
D17: in slots B/H, C/G, D/F
D17V: in slots A/E

Quick & Easy (p. 2-8, see fold-out section)

50x150L	3 842 993 664 / ...
Length L (mm)	80 ... 6000
Standard profile finishes (note minimum length, p. 2-25)	M12 / M16 / D9.8 (B,C,D,F,G,H)[1] / D17 (B,C,D,F,G,H)[1] / DB17 / F1 (A,E)[1]
Individual profile finishes (L_{max} = 5400 mm)	DI / DIS / MT / MTS / MI / MIS / DG[2]

[1] For the specified slots
[2] DG_{max} = 45°; L_{min1} / L_{min2} = 450 / 600 mm

100x100L

A = 29,9 cm2
I_x =318,3 cm4
I_y =318,3 cm4
W_x = 63,7 cm3
W_y = 63,7 cm3
m = 8,1 kg/m

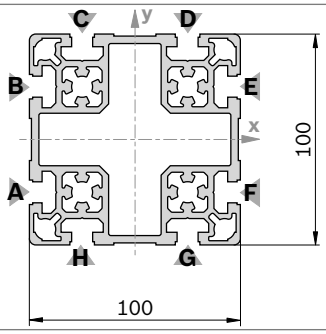

19457

Cap	Color	ESD		No.
100x100 (1x)	Signal gray		20	**3 842 548 824**
100x100 (1x)	Black		20	**3 842 548 825**
Material:	PP			

100x100L		L (mm)	No.
	1 pc	50 ... 6000	**3 842 993 171 / L**
	1 pc M12	60 ... 6000	**3 842 993 172 / L**
	1 pc M12 M12	110 ... 6000	**3 842 993 173 / L**
	1 pc M12 D17	90 ... 6000	**3 842 993 174 / L**
	1 pc D17	60 ... 6000	**3 842 993 175 / L**
	1 pc D17 D17	80 ... 6000	**3 842 993 176 / L**
	1 pc D17 D17V	80 ... 6000	**3 842 993 177 / L**
	6 pcs	6070	**3 842 529 355**

Profile finishing: M12: in all core holes
D17: in slots C/H, D/G
D17V: in slots A/F, B/E

Quick & Easy (p. 2-8, see fold-out section)

100x100L	3 842 993 685 / ...
Length L (mm)	50 ... 6000
Standard profile finishes (note minimum length, p. 2-25)	M12 / M16 / D9,8 / D17 / DB17 / F1
Individual profile finishes (L_{max} = 5400 mm)	DI / DIS / MT / MTS / MI / MIS / DG[1]

[1] DG_{max} = 45°; L_{min1} / L_{min2} = 474 / 648 mm

100x200L

A = 54,0 cm²
I_x = 2133,1 cm⁴
I_y = 602,1 cm⁴
W_x = 213,3 cm³
W_y = 120,4 cm³
m = 14,6 kg/m

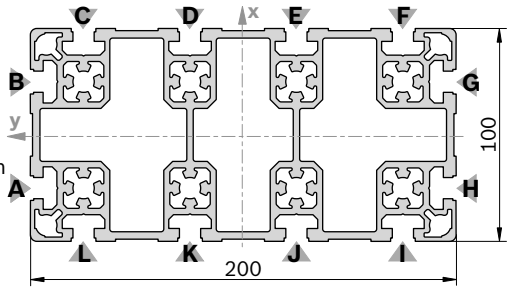

19458

100x200L			L (mm)	No.
	1 pc		50 ... 6000	**3 842 993 178 / L**
	1 pc	M12	60 ... 6000	**3 842 993 179 / L**
	1 pc	M12 M12	110 ... 6000	**3 842 993 180 / L**
	1 pc	M12 D17	90 ... 6000	**3 842 993 181 / L**
	1 pc	D17	60 ... 6000	**3 842 993 182 / L**
	1 pc	D17 D17	80 ... 6000	**3 842 993 183 / L**
	1 pc	D17V D17V	90 ... 6000	**3 842 993 227 / L**
	3 pcs		6070	**3 842 529 357**

Profile finishing: M12: in all core holes
D17: in slots C/L, D/K, E/J, F/I
D17V: in slots A/H, B/G

Cap	Color	ESD		No.
100x100 (2x)	Signal gray		20	**3 842 548 824**
100x100 (2x)	Black		20	**3 842 548 825**
Material:	PP			

Quick & Easy (p. 2-8, see fold-out section)

100x200L	3 842 993 687 / ...
Length L (mm)	50 ... 6000
Standard profile finishes (note minimum length,p.	M12 / M16 / D9.8 (C,D,E,F,I,J,K,L)[1] / D17 (C,D,E,F,I,J,K,L)[1] / DB17 / F1 (A,G)[1]
Individual profile finishes (L_{max} = 5400 mm)	DI / DIS / MT / MTS / MI / MIS / DG[2]

[1] For the specified slots
[2] DG_{max} = 30°; L_{min} = 416 / 532 mm

60x60L

A = 9,6 cm²
I_x = 32,4 cm⁴
I_y = 32,4 cm⁴
W_x = 10,8 cm³
W_y = 10,8 cm³
m = 2,6 kg/m

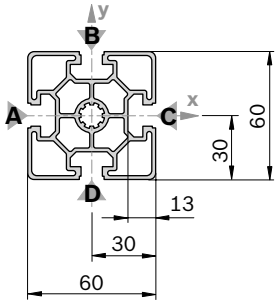

19459

60x60L			L (mm)	No.
	1 pc		50 ... 5600	**3 842 992 443 / L**
	1 pc	M12	60 ... 5600	**3 842 992 444 / L**
	1 pc	M12 M12	110 ... 5600	**3 842 992 445 / L**
	1 pc	M12 D17	90 ... 5600	**3 842 992 446 / L**
	1 pc	D17	60 ... 5600	**3 842 992 449 / L**
	1 pc	D17 D17	80 ... 5600	**3 842 992 447 / L**
	1 pc	D17 D17V	80 ... 5600	**3 842 992 448 / L**
	20 pcs		5600	**3 842 511 872**

Cap	Color	ESD		No.
60x60 (1x)	Signal gray		100	**3 842 548 808**
60x60 (1x)	Black		100	**3 842 548 809**
Material:	PP			

Cap with hole	Color	ESD		No.
60x60 (1x)	Signal gray		20	**3 842 548 810**
60x60 (1x)	Black		20	**3 842 548 811**
Material:	PP			

Quick & Easy (p. 2-8, see fold-out section)

60x60L	3 842 993 670 / ...
Length L (mm)	50 ... 5600
Standard profile finishes (note minimum length, p. 2-25)	M12 / D9.8 / D17 / DB17
Individual profile finishes (L_{max} = 4900 mm)	DI / DIS / MT / MTS / MI / MIS / DG[1]

[1] DG_{max} = 45°; L_{min} = 404 / 508 mm

60x60

A = 14,4 cm²
I_x = 52,2 cm⁴
I_y = 52,2 cm⁴
W_x = 17,4 cm³
W_y = 17,4 cm³
m = 3,9 kg/m

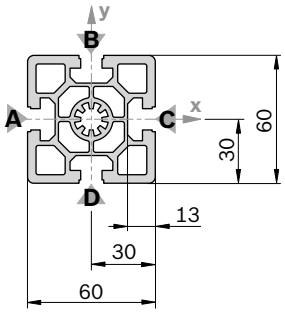

19460

Cap	Color	ESD		No.
60x60 (1x)	Signal gray		100	**3 842 548 808**
60x60 (1x)	Black		100	**3 842 548 809**
Material:	PP			

Cap with hole	Color	ESD		No.
60x60 (1x)	Signal gray		20	**3 842 548 810**
60x60 (1x)	Black		20	**3 842 548 811**
Material:	PP			

60x60		L (mm)	No.
	1 pc	50 ... 5600	**3 842 990 350 / L**
	1 pc M12	60 ... 5600	**3 842 990 351 / L**
	1 pc M12 M12	110 ... 5600	**3 842 990 353 / L**
	1 pc M12 M16	180 ... 5600	**3 842 990 354 / L**
	1 pc M12 D17	90 ... 5600	**3 842 990 355 / L**
	1 pc M16	120 ... 5600	**3 842 990 352 / L**
	1 pc M16 D17	170 ... 5600	**3 842 990 373 / L**
	1 pc D17	50 ... 5600	**3 842 990 370 / L**
	1 pc D17 D17	80 ... 5600	**3 842 990 357 / L**
	1 pc D17 D17V	80 ... 5600	**3 842 990 359 / L**
	20 pcs	5600	**3 842 509 185**

Quick & Easy (p. 2-8, see fold-out section)

60x60	3 842 993 668 / ...
Length L (mm)	50 ... 5600
Standard profile finishes (note minimum length,p.	M12 / M16 / D9,8 / D17 / DB17
Individual profile finishes (L_{max} = 4900 mm)	DI / DIS / MT / MTS / MI / MIS / DG[1)]

[1)] DG_{max} = 45°; L_{min} = 404 / 508 mm

60x90

A = 25,8 cm²
I_x = 214,2 cm⁴
I_y = 90,5 cm⁴
W_x = 47,6 cm³
W_y = 30,2 cm³
m = 7,0 kg/m

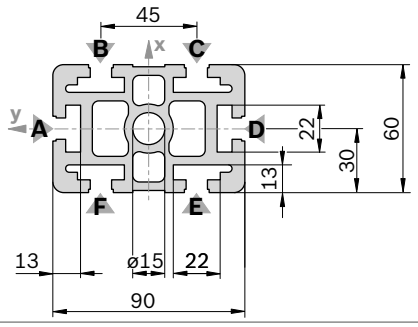

19461

Cap	Color	ESD		No.
60x90 (1x)	Signal gray		20	**3 842 548 812**
60x90 (1x)	Black		20	**3 842 548 813**
Material:	PP			

Cap with hole	Color	ESD		No.
60x90 (1x)	Black		20	**3 842 514 663**
Material:	PA			

Note: A quick connector cannot be used

60x90		L (mm)	No.
	1 pc	50 ... 5600	**3 842 990 450 / ...**
	1 pc M16	120 ... 5600	**3 842 990 453 / ...**
	1 pc M16 M16	240 ... 5600	**3 842 990 454 / ...**
	1 pc M16 D17	170 ... 5600	**3 842 992 962 / ...**
	1 pc M16 D17V	170 ... 5600	**3 842 992 963 / ...**
	1 pc M16 F2	170 ... 5600	**3 842 990 472 / ...**
	1 pc D17 D17	80 ... 5600	**3 842 990 097 / ...**
	1 pc D17 D17V	80 ... 5600	**3 842 990 099 / ...**
	1 pc D17V D17V	90 ... 5600	**3 842 990 098 / ...**
	1 pc F1 F1	110 ... 5600	**3 842 990 464 / ...**
	1 pc F1 F1V	110 ... 5600	**3 842 990 481 / ...**
	1 pc F2 F2	110 ... 5600	**3 842 990 478 / ...**
	10 pcs	5600	**3 842 509 183**

Profile finishing: D17: in slots B/F, C/E
D17V: in slots A/D

Quick & Easy (p. 2-8, see fold-out section)

60x90	3 842 993 671 / ...
Length L (mm)	50 ... 5600
Standard profile finishes (note minimum length, p. 2-25)	M16 / D9.8 / D17 / DB17 / F1 (A, D)[1)]
Individual profile finishes (L_{max} = 4900 mm)	DI / DIS / MT / MTS / MI / MIS / DG[1)]

[1)] For the specified slots
[1)] DG_{max} = 45°; L_{min} = 456 / 612 mm

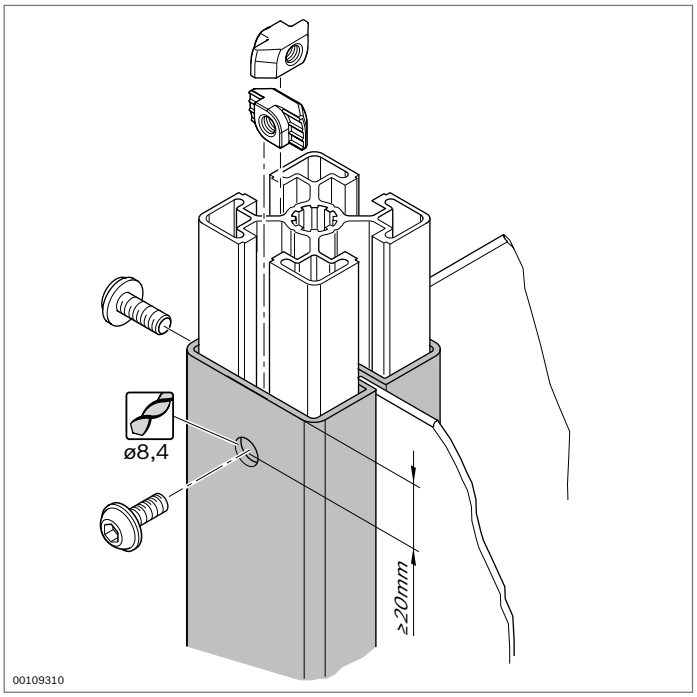

Rectangular tube

- For constructing manually height-adjustable frames
- Cutouts for holding surface elements
- Profile finishing: hole for screw

Required accessories:
fastening material

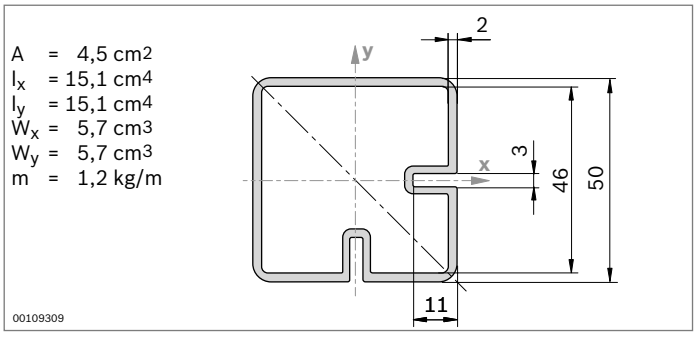

Rectangular tube		L (mm)	No.
1 pc		50 ... 5600	**3 842 992 913 / L**
6 pcs		5600	**3 842 537 817**

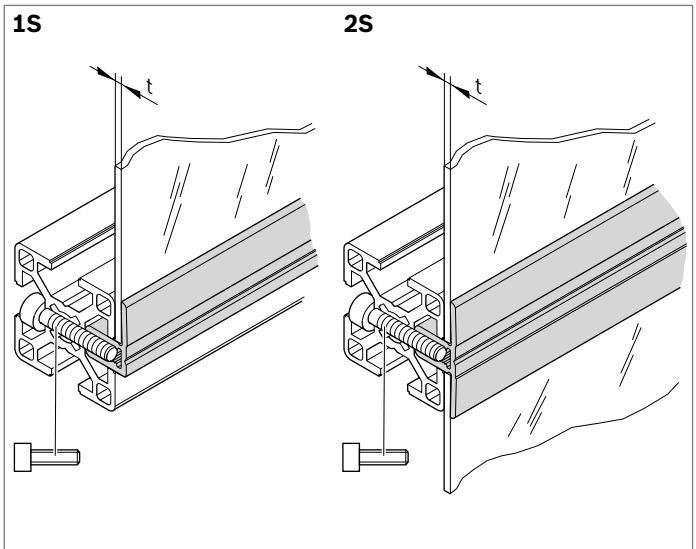

	t (mm)	
8	1,5-5	DIN EN ISO 4762 - M4x20
10	1-8	DIN EN ISO 4762 - M6x30

00133333

Clamping profile

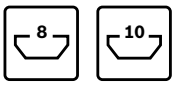

- For simple fastening of panes, surface elements, or grilles on strut profiles
- For subsequent installation in closed frame constructions
- For surface elements with varying thicknesses
- Profile finishing: through-hole for mounting screw

Required accessories:

- Cylinder head bolt DIN EN ISO 4762 – M4x20 (8 mm slot)
- Cylinder head bolt DIN EN ISO 4762 – M6x30 (10 mm slot)

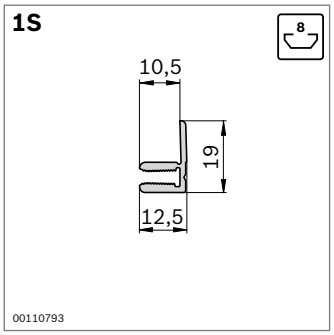

00110793

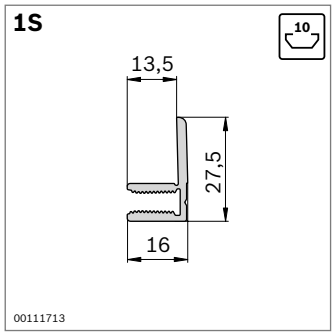

00111713

Clamping profile 1S		Slot	L (mm)	No.
1 pc		8	50 ... 3000	**3 842 993 017 / L**
10 pcs		8	3000	**3 842 524 058**
1 pc		10	50 ... 3000	**3 842 993 019 / L**
10 pcs		10	3000	**3 842 524 064**

Material: Aluminum, anodized

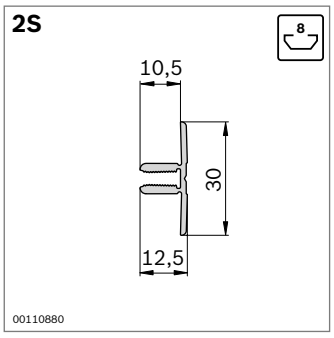

00110880

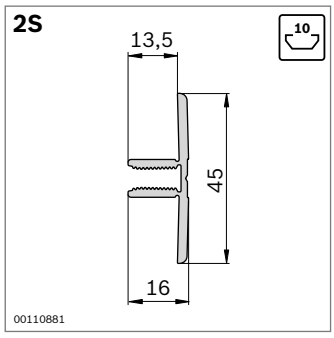

00110881

Clamping profile 2S		Slot	L (mm)	No.
1 pc		8	50 ... 3000	**3 842 993 018 / L**
10 pcs		8	3000	**3 842 524 061**
1 pc		10	50 ... 3000	**3 842 993 020 / L**
10 pcs		10	3000	**3 842 524 067**

Material: Aluminum, anodized

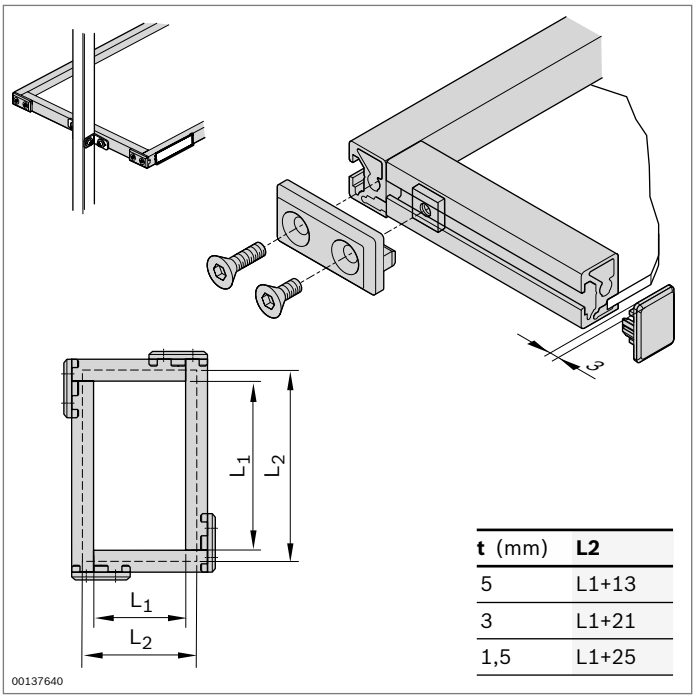

t (mm)	L2
5	L1+13
3	L1+21
1,5	L1+25

Frame profile 22.5x30

- For inexpensive construction of tablets and material shelves
- Surface elements are mounted under tension so that they do not rattle

Accessories, optional:
- Bracket set M6 (p. 3-28)
- Swivel fastening (p. 4-10)
- Lettering clip for 8 mm slot (p. 2-79)
- Plate (p. 2-59)

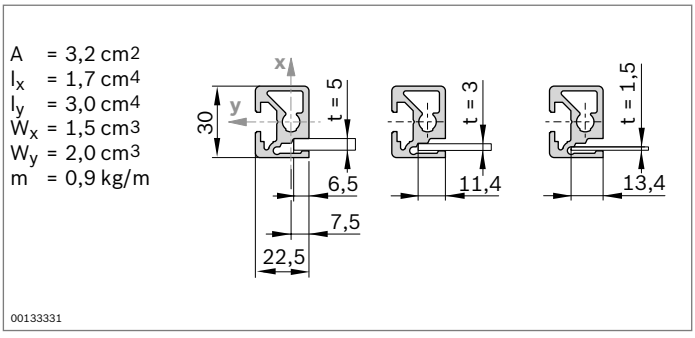

Frame profile 22.5x30		Slot	L (mm)	No.
1 pc		8	50 ... 5600	**3 842 992 493 / L**
20 pcs		8	5600	**3 842 515 229**

Material: Aluminum, anodized

Cap	Color	ESD		No.
22.5x30	Black		20	**3 842 516 720**

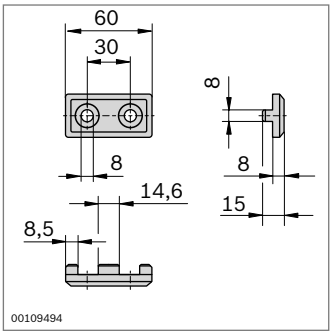

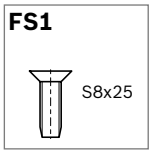

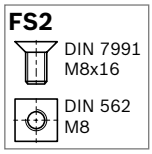

Corner piece for frame profile 22.5x30

- For perpendicular connections between two frame profiles 22.5x30
- Profile finishing: not required

Corner piece	ESD		No.	FS
		20	**3 842 535 661**	FS1, FS2

Material: PA; black
Scope of delivery: Incl. fastening material (FS)

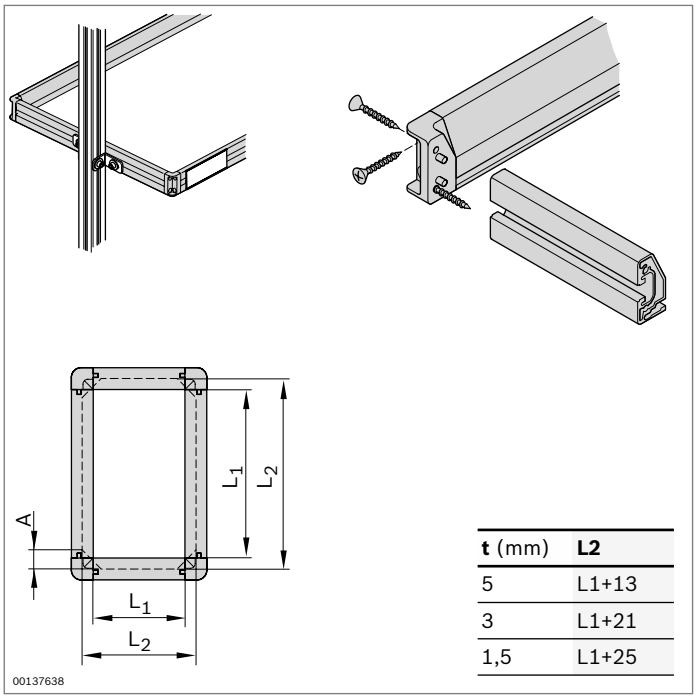

t (mm)	**L2**
5	L1+13
3	L1+21
1,5	L1+25

Frame profile 22.5x45

- For inexpensive construction of tablets and material shelves
- Surface elements are mounted under tension so that they do not rattle

Accessories, optional:
- Bracket set (p. 3-30)
- Swivel fastening (p. 4-10)
- Lettering clip for 10 mm slot (p. 2-79)
- Plate (p. 2-59)

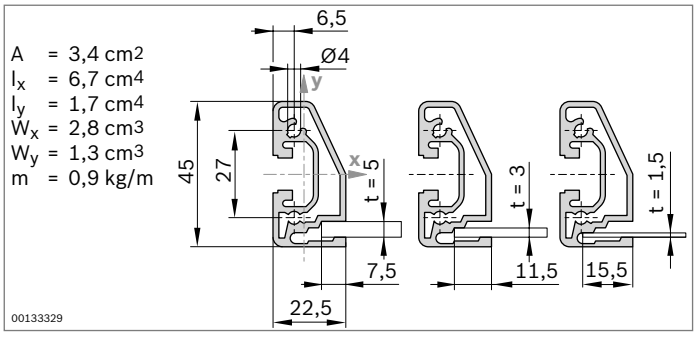

Frame profile 22.5x45	**Slot**	**L** (mm)	**No.**
1 pc	10	50 ... 5600	**3 842 992 411 / L**
20 pcs	10	5600	**3 842 508 102**

Material: Aluminum, anodized

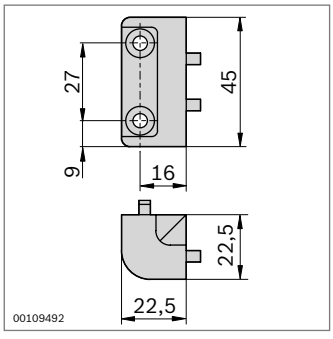

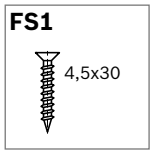

Corner piece for frame profile 22.5x45

- For perpendicular connections of two frame profiles 22.5x45
- Profile machining: not required

Corner bracket	**ESD**		**No.**	**FS**
		20	**3 842 535 637**	4xFS1

Material: Diecast zinc
Scope of delivery: Incl. fastening material (FS)

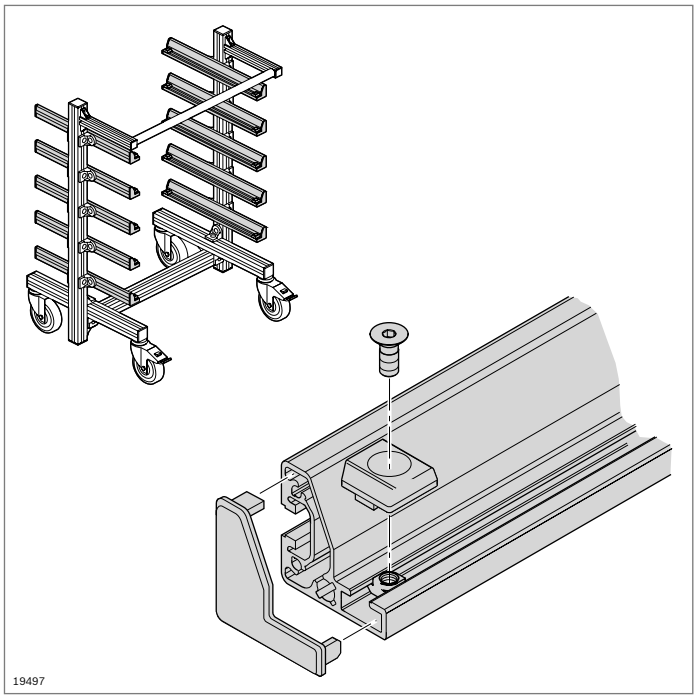

Angle profile

- For supporting containers, plates, or workpiece pallets in flow racks, material shuttles, or hopper stackers

Accessories:
Bracket R40x43 (p. 3-29)

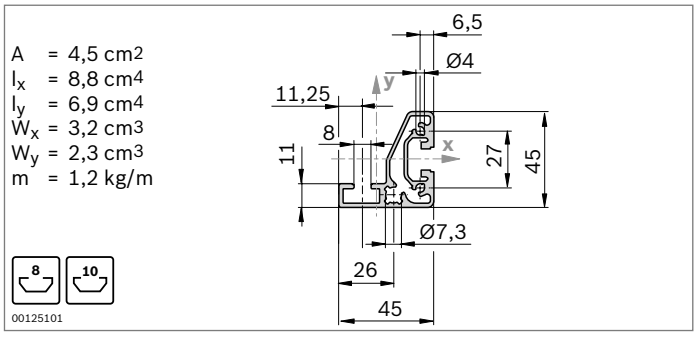

Angle profile		L (mm)	No.
1 pc		50 ... 5600	**3 842 992 412 / L**
20 pcs		5600	**3 842 508 104**

Material: Aluminum, anodized

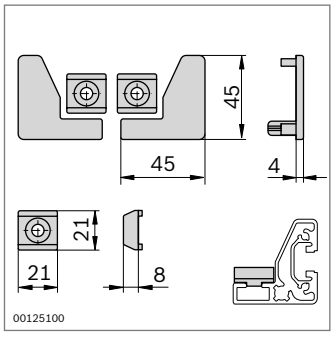

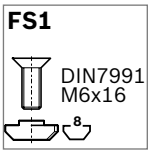

Stopper and cap

- Stoppers prevent containers from sliding on the angle profile
- Cap to prevent injuries at open profile ends
- Attractive design

Stopper, cap		No.	FS
	20	**3 842 508 116**	2xFS1

Material: PA; black
Fastening material: steel; galvanized
Scope of delivery: Incl. fastening material (FS)

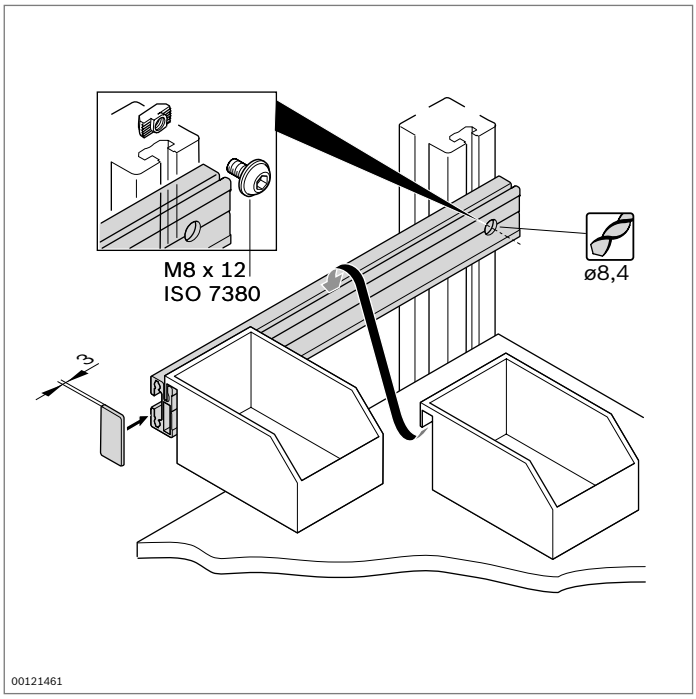

Suspension profile

- For the fast, secure suspension of grab containers, grab ledges, grab trays, and tool holders
- Profile finishing:
  Through hole for screwdriver
- Matching grab containers in the Manual Production Systems catalog (**3 842 538 280**)

Required accessories:

- Screw
- T-nut (p. 3-4)

A = 2,0 cm2
I_x = 2,0 cm4
I_y = 0,5 cm4
W_x = 2,7 cm3
W_y = 0,3 cm3
m = 0,6 kg/m

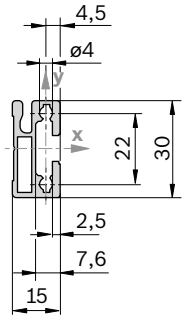

Cap	Color	ESD		No.
15x30	black		20	**3 842 338 990**

Suspension profile		L (mm)	ESD	No.
1 pc		50 ... 3000		**3 842 993 411 / L**
10 pcs		3000		**3 842 537 679**
1 pc		50 ... 3000		**3 842 993 359 / L**
10 pcs		3000		**3 842 537 681**

Material: Suspension profile: aluminum, anodized
ESD suspension profile: aluminum, transparent chromated

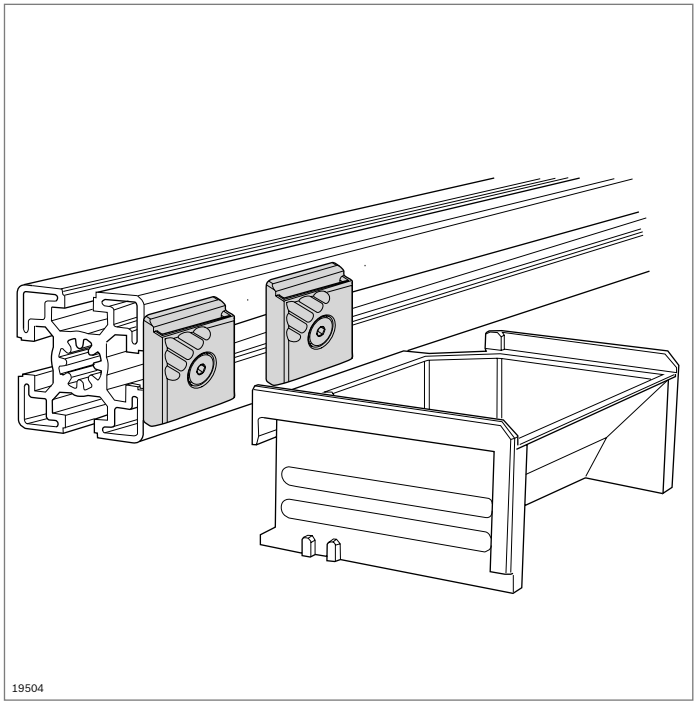

Container mount

- Container mount for mounting tool holders, grab containers, grab trays, and grab ledges
- Suitable for 8 mm and 10 mm slot

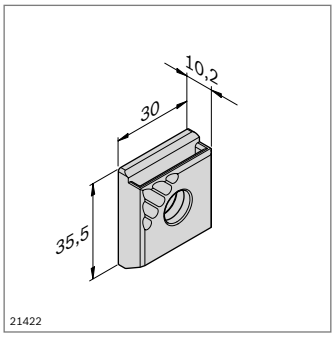

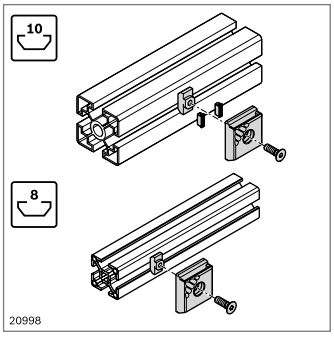

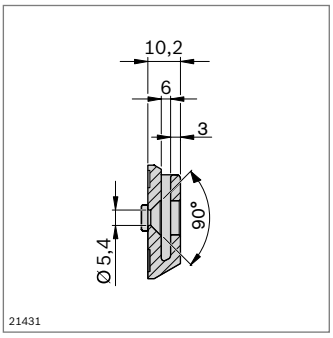

Container mount		ESD	No.
	10		**3 842 544 797**

Material: PA 66; black
Fastening material: steel; galvanized
Scope of delivery: Incl. fastening material (FS)

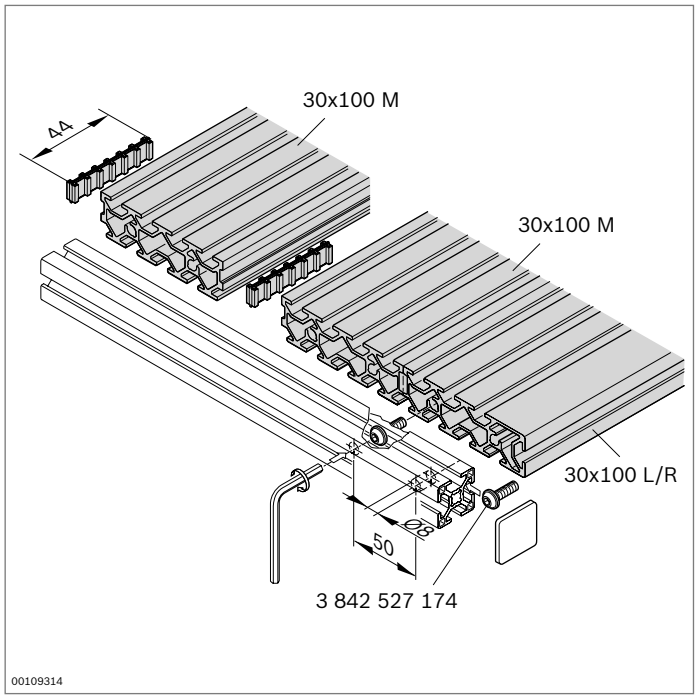

Slotted plate 30x100

- Modular plate profiles with multiple slots for experimental constructions of any size
- Slot spacing 25 mm
- Slot size 8.9 mm
- 8 mm slot connectors may be used

Accessories, optional:
- Profile 30x30 (p. 2-17)
- Sliding block

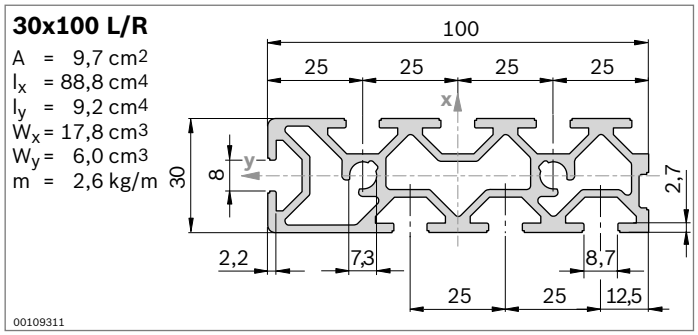

- Slotted plate **30x100 L/R** with lateral 8 mm slot as outer stop

Slotted plate 30x100 L/R	Slot	L (mm)	No.
1 pc	8	100 ... 5600	**3 842 993 337 / L**
18 pcs	8	5600	**3 842 542 696**

Material: Aluminum, anodized

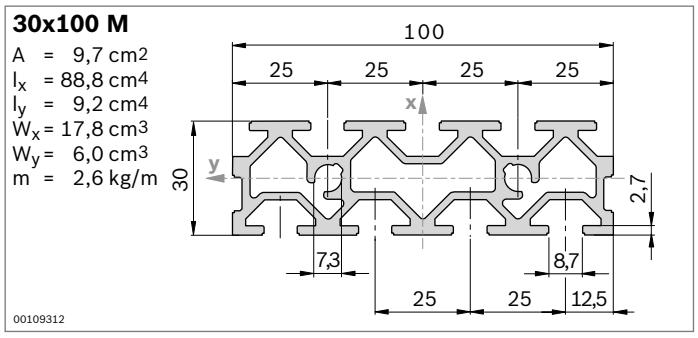

- Slotted plate **30x100 M** for constructing slotted plates of any width

Slotted plate 30x100 M	Slot	L (mm)	No.
1 pc	8	100 ... 5600	**3 842 993 336 / L**
18 pcs	8	5600	**3 842 542 698**

Material: Aluminum, anodized

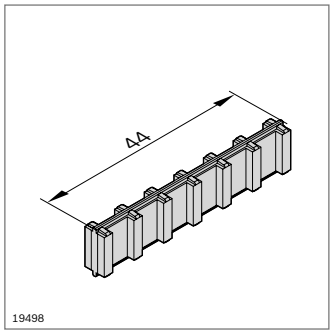

Sliding block

- For connecting slotted plates 30x100
- Recommendation: use 3 sliding blocks per meter of profile length

Sliding block		No.
	100	**3 842 520 922**

Material: PA

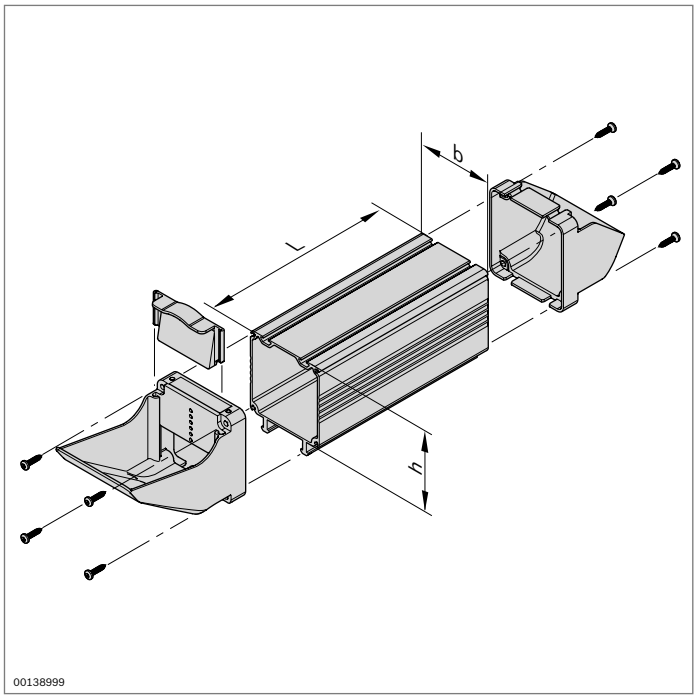

Material chute
refill end-piece, grab ledge, grab container base

- Small parts within easy reach on the workstation
- Components for the individual construction of stable Vario grab containers
- Customizable holding capacity

90x45

A = 7,0 cm2
I_x = 20,7 cm4
I_y = 54,3 cm4
m = 1,8 kg/m

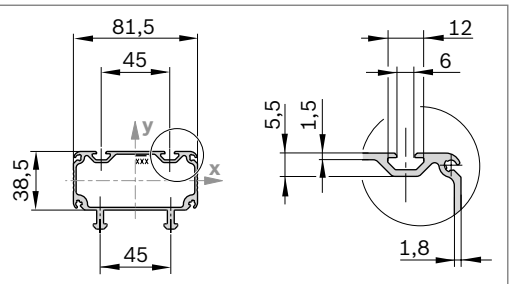

Material chute 90x45		L (mm)	No.
	1 pc	50 ... 3000	**3 842 993 071 / L**
	3 pcs	3000	**3 842 526 671**

Material: Aluminum, anodized

90x90

A = 9,6 cm2
I_x = 118,8 cm4
I_y = 88,1 cm4
m = 2,5 kg/m

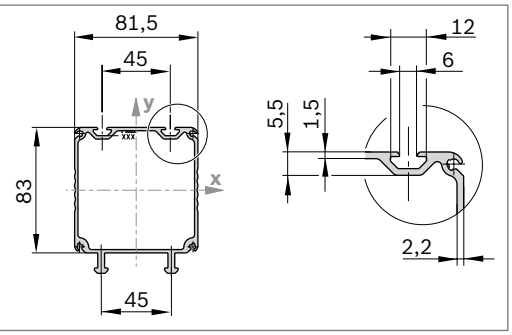

Material chute 90x90		L (mm)	No.
	1 pc	50 ... 3000	**3 842 993 072 / L**
	3 pcs	3000	**3 842 526 672**

Material: Aluminum, anodized

180x90

A = 15,5 cm2
I_x = 208,2 cm4
I_y = 597,5 cm4
m = 4,2 kg/m

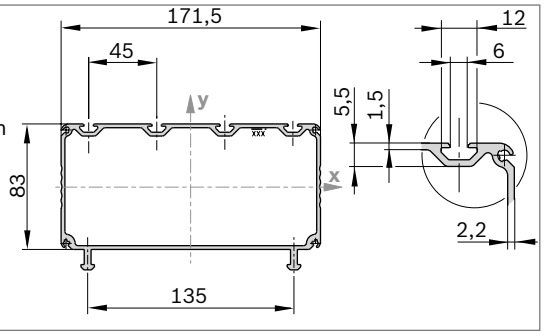

Material chute 180x90		L (mm)	No.
	1 pc	50 ... 3000	**3 842 993 073 / L**
	3 pcs	3000	**3 842 526 673**

Material: Aluminum, anodized

90x45

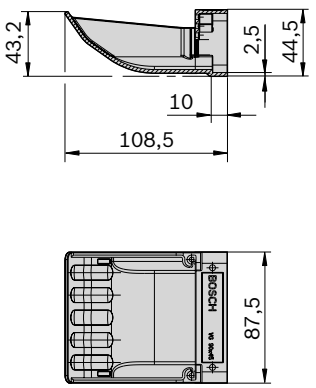

19925

90x45

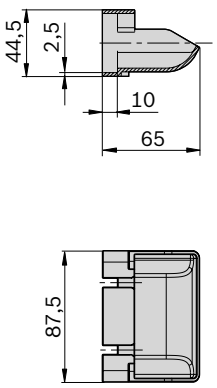

19926

- Refill end-piece with large opening for easy filling
- Ergonomically designed grab ledge for easy, safe grabbing
- Grab container pusher for closing

Grab ledge and refill end-piece	No.	FS
90 x 45	**3 842 526 626**	8xFS1, FS2

Material: Plastic ABS, light gray RAL 7035
Fastening material: steel; galvanized
Scope of delivery: Incl. fastening material (FS)

FS1

DIN 7981
ST4,2x19

FS2

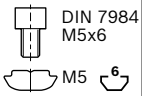

DIN 7984
M5x6
M5 6

90x90
180x90

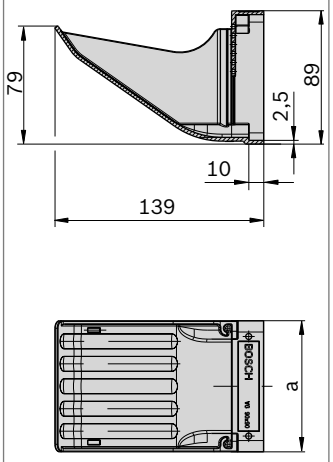

	90x90	180x90
a	87,5	172,5

19600

90x90
180x90

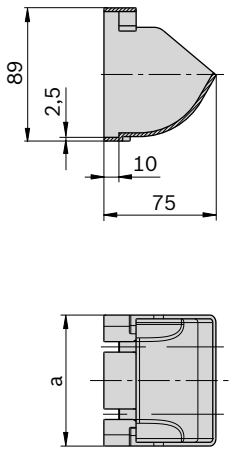

	90x90	180x90
a	87,5	172,5

19601

Grab ledge and refill end-piece	No.	FS
90 x 90	**3 842 526 627**	8xFS1, FS2
180 x 90	**3 842 526 628**	8xFS1, FS2

Material: Plastic ABS, light gray RAL 7035
Fastening material: steel; galvanized
Scope of delivery: Incl. fastening material (FS)

FS1

DIN 7981
ST4,2x19

FS2

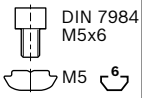

DIN 7984
M5x6
M5 6

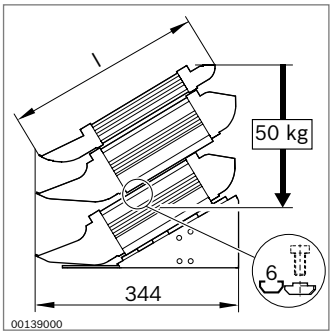

00139000

- Grab container base for an ergonomically optimized arrangement of grab containers

Grab container base	w x h x l (mm)	No.
SG 90	90 x 149 x 315	**3 842 526 660**
SG 180	180 x 149 x 315	**3 842 526 665**

Material: Sheet steel, light gray powder coating (RAL 7035)

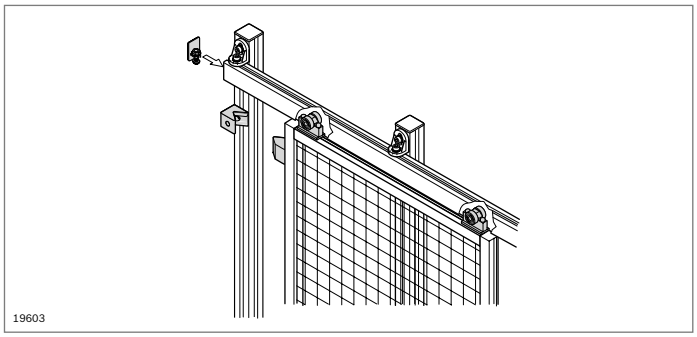

Profile rail, trolley

- Profile rail and trolley for movable mounting of parts, e.g. for use as a screwdriver hanger at work tables or for EcoSafe sliding doors (p. 10-14)

Accessories:

See page 12-4

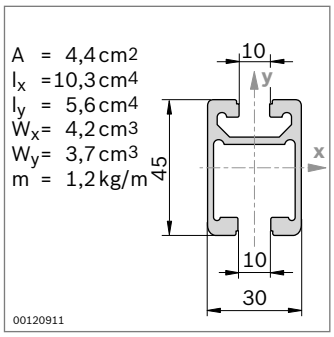

Profile rail 30x45C	L (mm)	No.
1 pc	50 ... 5600	**3 842 992 946 / L**
20 pcs	5600	**3 842 523 598**

Material: Aluminum, anodized

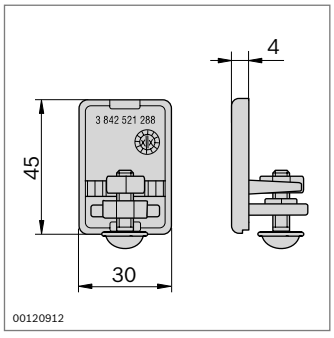

FS1

M8

End piece

- With screw protection
- As stop for trolley

End piece 30x45C		No.	FS
	20	**3 842 521 513**	FS1

Material: Aluminum, anodized
Scope of delivery: Incl. fastening material (FS)

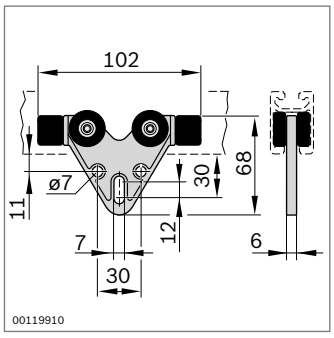

Trolley

- Trolley with ring, e.g. for hanging a spring hook

Trolley for profile rail 30x45C	No.
	3 842 521 510

Material: Injection molded plastic

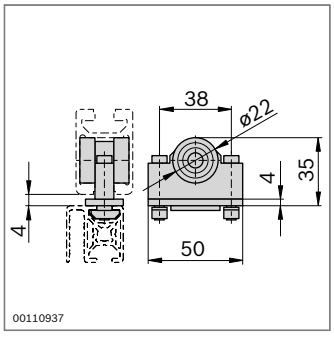

FS2

DIN 4762
M5x30

A 6,4

Trolley

- Trolley with dust-proof ball bearings for smooth movement
- For fastening profiles with a 8 mm slot

Trolley	No.	FS
	3 842 524 153	FS2

Material: PA; black
Scope of delivery: Incl. fastening material (FS)

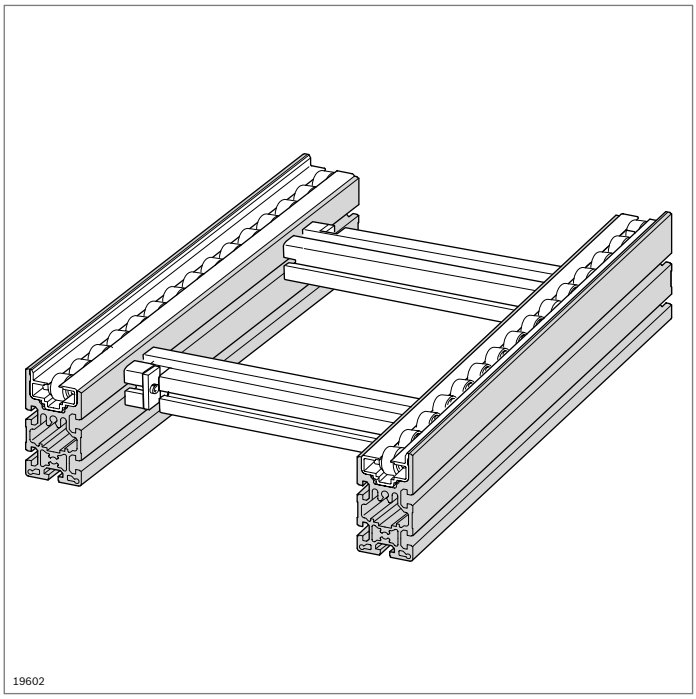

Profiles for installing conveyor media

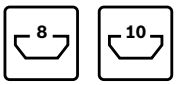

- Profiles that are normally used to construct the transfer systems TS 2*plus* and TS 4, as well as Lean conveyor tracks, are also suitable for the construction of manual conveyor sections. Detailed information is available in chapter 12 “Elements for manual movement” and in the respective special catalogs

U-profile

A = 4,4 cm²
I_x = 10,3 cm⁴
I_y = 8,3 cm⁴
W_x = 4,6 cm³
W_y = 4,1 cm³
m = 1,2 kg/m

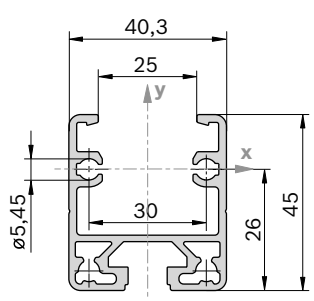

U-profile		Slot	L (mm)	ESD	No.
1 pc		10	50 ... 6000		**3 842 993 316 / L**
20 pcs		10	6070		**3 842 535 115**
1 pc		10	50 ... 6000		**3 842 995 027 / L**
20 pcs		10	6070		**3 842 541 814**

Material: U-profile: aluminum, anodized
U-profile ESD: aluminum, untreated

SP 2/R

A = 5,2 cm²
I_x = 4,3 cm⁴
I_y = 11,7 cm⁴
W_x = 2,4 cm³
W_y = 5,2 cm³
m = 1,4 kg/m

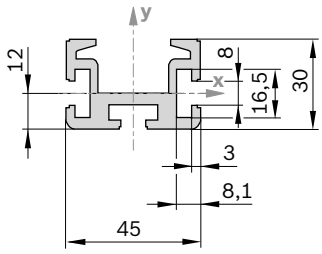

Section profile SP 2/R	L (mm)	No.
	50 ... 6000	**3 842 992 676**

Material: Aluminum, natural-colored, anodized

SP 2/B

A = 10,4 cm²
I_x = 49,6 cm⁴
I_y = 25,8 cm⁴
W_x = 12,1 cm³
W_y = 11,5 cm³
m = 2,8 kg/m

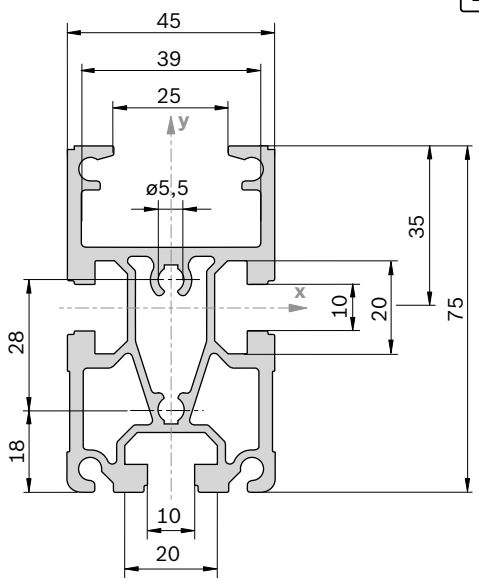

Section profile SP 2/B		Slot	L (mm)	No.
1 pc		10	200 ... 6000	**3 842 992 884 / L**
16 pcs		10	6070	**3 842 532 695**

Material: Aluminum, natural-colored, anodized

SP 2/B-50

A = 6,9 cm²
I_x = 16,1 cm⁴
I_y = 16,9 cm⁴
W_x = 5,3 cm³
W_y = 7,5 cm³
m = 1,9 kg/m

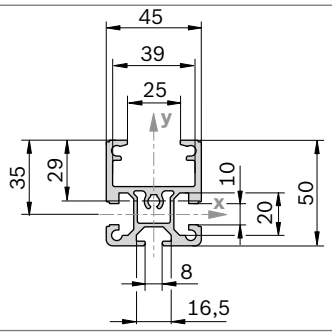

Section profile SP 2/B-50		Slot	L (mm)	No.
1 pc		8 / 10	200 ... 6000	**3 842 992 903 / L**
20 pcs		8 / 10	6070	**3 842 532 697**

Material: Aluminum, natural-colored, anodized

SP 2/B-100

A = 11,9 cm²
I_x = 95,1 cm⁴
I_y = 30,4 cm⁴
W_x = 20,0 cm³
W_y = 13,5 cm³
m = 3,2 kg/m

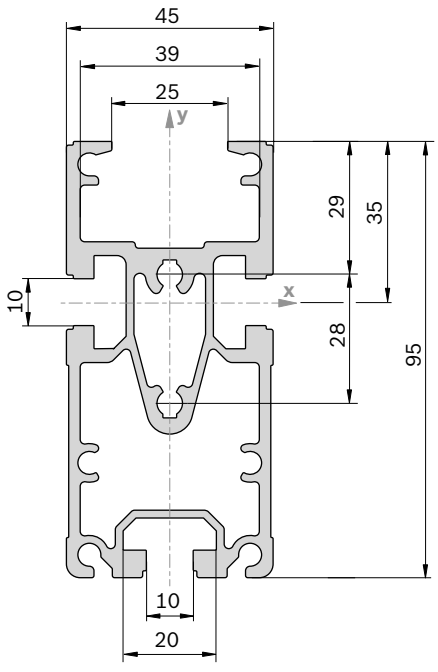

Section profile SP 2/B-100		Slot	L (mm)	No.
1 pc		10	200 ... 6000	**3 842 993 259 / L**
16 pcs		10	6070	**3 842 532 608**

Material: Aluminum, natural-colored, anodized

SP 2/BH

A = 12,4 cm²
I_x = 53,7 cm⁴
I_y = 28,6 cm⁴
W_x = 14,0 cm³
W_y = 13,8 cm³
m = 3,3 kg/m

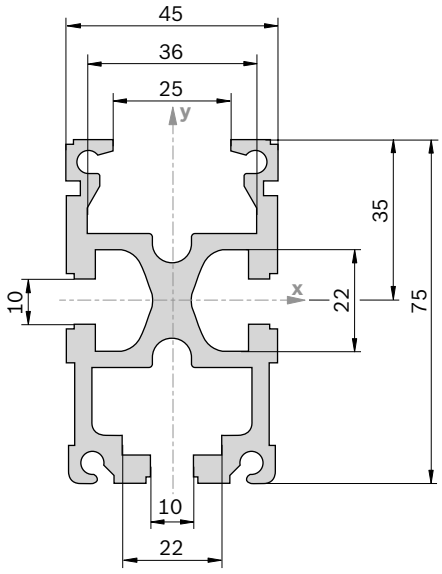

19906

Section profile SP 2/BH	Slot	L (mm)	No.
1 pc	10	200 ... 6000	**3 842 990 409 / L**
16 pcs	10	6070	**3 842 532 696**

Material: Aluminum, natural-colored, anodized

SP 4/R

A = 26,1 cm²
I_x = 222,0 cm⁴
I_y = 95,5 cm⁴
W_x = 84,9 cm³
W_y = 16,4 cm³
m = 3,5 kg/m

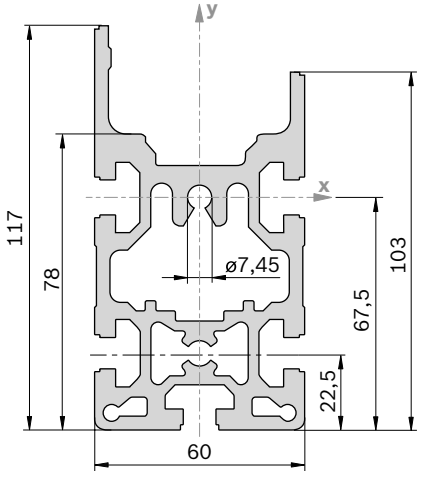

19907

Section profile SP 4/R	Slot	L (mm)	No.
10 pcs	10	6000	**3 842 532 505**

Material: Aluminum, natural-colored, anodized

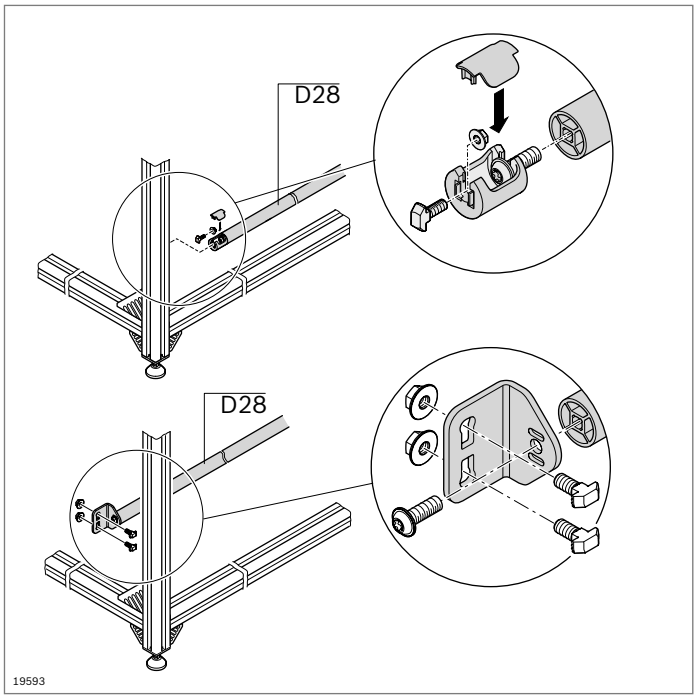

Round tube D28, strut profile D28x55 bracket, T-connector

- For constructing cross ties in flow racks or workstations
- Designed for heavy loads
- Use of brackets makes for easy assembly
- Elongated hole in the mounting bracket for longitudinal compensation
- Central holes can be used for self-tapping screws S8x25 (p. 3-38)
- For matching components to construct conveyor tracks, see chapter 12 “Elements for manual movement”

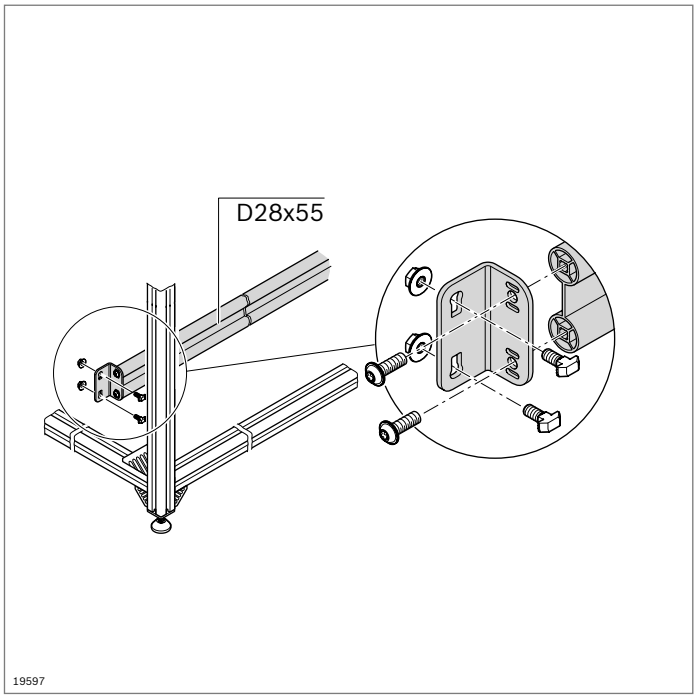

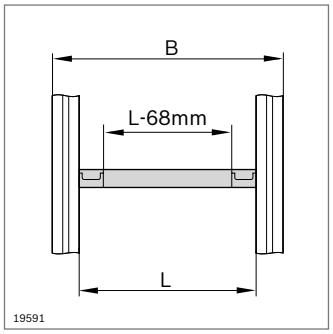

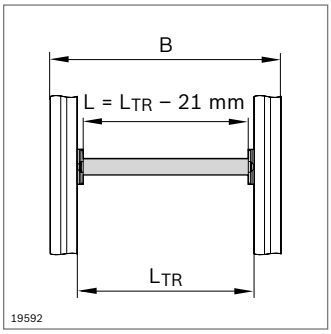

D28

A = 2,4 cm²
I_x = 1,5 cm⁴
I_y = 1,5 cm⁴
W_x = 1,1 cm³
W_y = 1,1 cm³
m = 0,7 kg/m

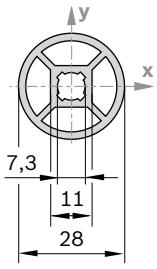

19505

Round tube D28	L (mm)	No.
1 pc	50 ... 6000	**3 842 993 317 / L**
20 pcs	6070	**3 842 535 118**

Material: Aluminum, anodized
Accessories, optional: Lettering clip (p. 2-84)

Cap D28	Color	ESD		No.
	Gray		20	**3 842 537 718**
	Black		20	**3 842 535 835**

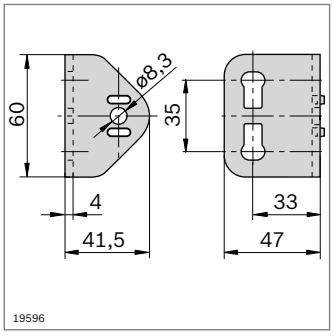

19596

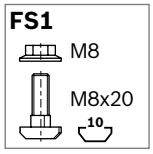

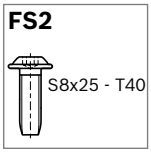

Holding bracket for round tube D28

- For mounting a round tube D28 to a strut profile with a 10 mm slot
- Extremely simple mounting thanks to easy adjustment of the installation height

Bracket 60x47x4		No.	FS
	20	**3 842 536 002**	2xFS1, FS2

Material: Steel; galvanized
Scope of delivery: Incl. fastening material (FS)

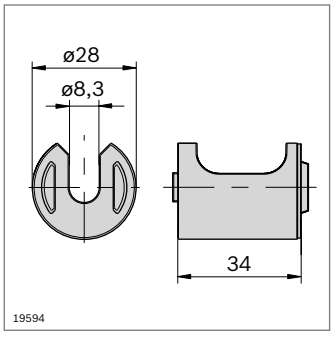

19594

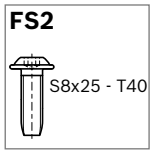

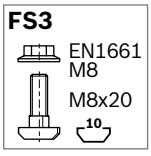

T-connector for round tube D28

- For mounting a round tube D28 to a strut profile with a 10 mm slot
- Without interfering contours

T-connector D28		No.	FS
	20	**3 842 532 879**	FS2, FS3

Material: T-connector: diecast aluminum
Cover cap: ABS; black
Scope of delivery: Incl. cap, fastening material (FS)

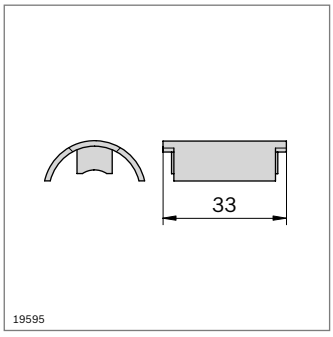

19595

Cap D28		No.
	20	**3 842 532 878**

Material: ABS; black

D28x55

A = 5,9 cm2
I_x = 3,2 cm4
I_y = 88,3 cm4
W_x = 2,3 cm3
W_y = 23,1 cm3
m = 1,6 kg/m

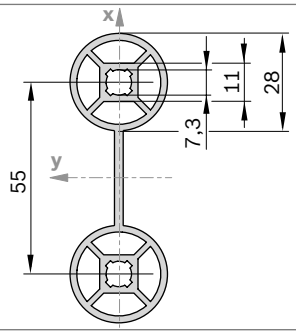

19468

Strut profile D28x55	L (mm)	No.
1 pc	100 ... 6000	**3 842 993 489 / L**
20 pcs	6070	**3 842 537 477**

Material: Aluminum, anodized
Accessories, optional: Lettering clip (p. 2-84)

Cap D28	Color	ESD		No.
(2x)	Gray		20	**3 842 537 718**
(2x)	Black		20	**3 842 535 835**

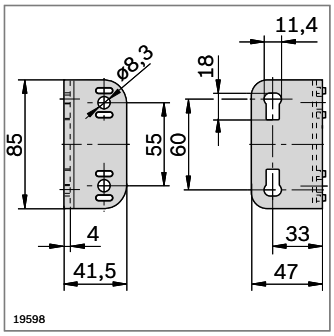

19598

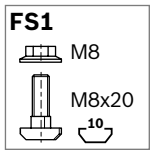

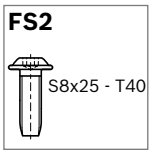

Bracket 85x47x4

- For mounting a strut profile D28x55 to a strut profile with a 10 mm slot
- Extremely simple mounting thanks to easy adjustment of the installation height

Bracket 85x47x4		No.	FS
	20	**3 842 536 730**	2xFS1, 2xFS2

Material: Steel; galvanized
Scope of delivery: Incl. fastening material (FS)

EcoShape tubular framing system

- All connectors can be combined with the EcoShape round tubes D28L and D28L, N10, and the D28 round tube
- Integrated poka-yoke system for easy and secure connector installation
  - Anti-torsion element for secure joints
  - Positive interlocking connection
- All connectors are suitable for building ESD-conductive systems.

Material: Diecast zinc
Scope of delivery: incl. fastening material

31 components – a myriad of options

The EcoShape system is characterized by its consistent simplicity and efficiency: using just a few components, you can build complete assembly lines as well as simple transport shuttles.

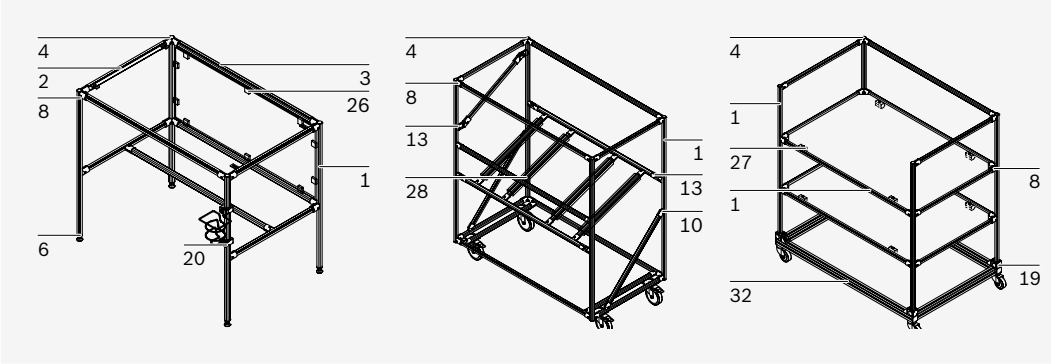

1 D28L round tube

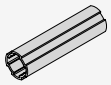

24878

2 D28L, N10 round tube

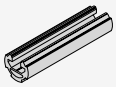

24879

3 Slide rail

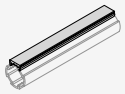

24880

4 Cap D28L

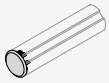

24881

5 Cap D28L, N10

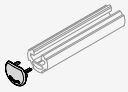

24882

6 Threaded sleeve D28L; PA

24883

7 Threaded sleeve D28L, Zn

24884

8 90° connector

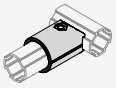

24885

9 Parallel connector

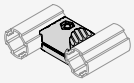

24886

10 45° connector

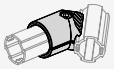

24887

11 Strut D28L, 45°

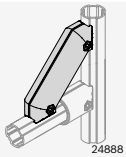

24888

12 Cross connector

24889

13 0°-90° Connector

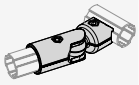

24890

14 0°-90° D28 connector

24891

15 Corner piece D28

24892

16 Retaining ring D28L

24893

17 Swivel bearing D28L

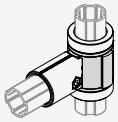

24894

18 N8, N10 adapter

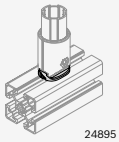

24895

19 N10/45 adapter

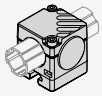

24896

20 N10/30 adapter

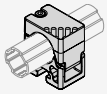

24897

21 Adapter fix D28L

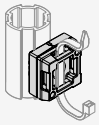

24898

22 XLean adapter

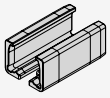

24899

23 Tube clamp D28L, N10

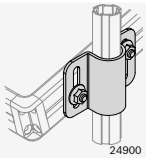

24900

24 Hinge D28L/D28L

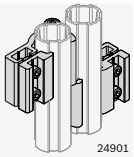

24901

25 Hinge D28L/-

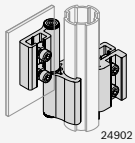

24902

26 Variofix block PA

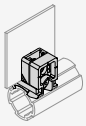

24903

27 Variofix Block Zn

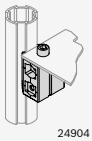

24904

28 Impact protection device

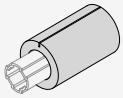

24905

29 Ring D50

24906

30 Rubber foot D28

24907

31 Stopper D28L, N10

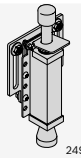

24908

32 Profile 45x45L

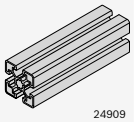

24909

1

A = 1,8 cm²
I_x = 1,3 cm⁴
I_y = 1,3 cm⁴
W_x = 1,0 cm³
W_y = 1,0 cm³
m = 0,5 kg/m

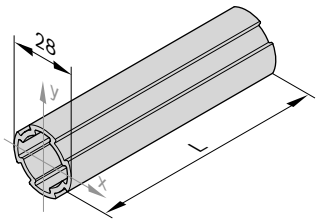

00134985

- Round tube D28L with 4 interfaces for attaching EcoShape connectors

Round tube D28L	L (mm)	No.
1 pc	50 ... 5600	**3 842 996 191/L**
50 pcs	5600	**3 842 541 211**

Material: Aluminum, anodized

2

A = 2,6 cm²
I_x = 1,2 cm⁴
I_y = 2,0 cm⁴
W_x = 0,8 cm³
W_y = 1,4 cm³
m = 0,7 kg/m

10

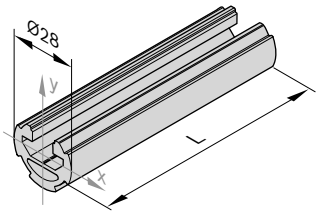

00134986

- Round tube D28L, N10 with a 10 mm slot for mounting accessories from the modular aluminum framing system
- 3 interfaces for attaching EcoShape connectors

Round tube D28L, N10	L (mm)	No.
1 pc	50 ... 5600	**3 842 996 192/L**
20 pcs	5600	**3 842 541 213**

Material: Aluminum, anodized

3

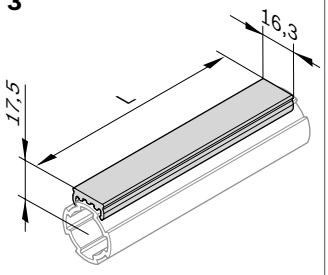

00134987

- Slide rail for creating a simple conveyor track or manual slide section by clipping the slide rail onto the round tube D28L or D28L, N10

Slider rail	L (mm)	ESD		No.
	2000		10	**3 842 541 196**
	2000	✓	10	**3 842 548 117**

Material: PVC; gray
ESD: PVC (conductive); black

4

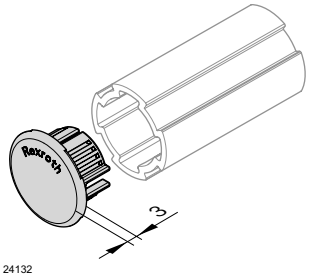

24132

5

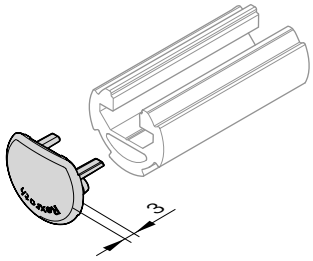

24133

- Cap for round tube D28L and D28L, N10

Cap	ESD		No.
4 D28L	✓	20	**3 842 548 129**
5 D28L, N10	✓	20	**3 842 548 130**

Material: PA66 (conductive); black

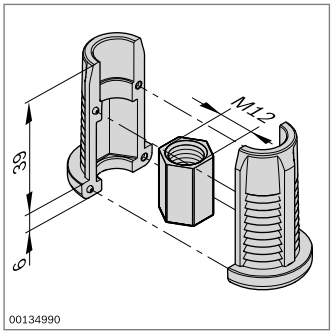

▶ Threaded sleeve for incorporating a leveling foot or caster. For further information (see p. 6-7)

Threaded sleeve D28L, PA	ESD		No.
		20	**3 842 541 185**

Material: PA66 (conductive); black
Hexagon nut: aluminum

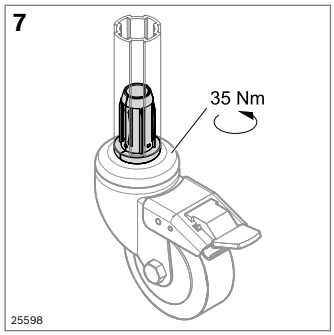

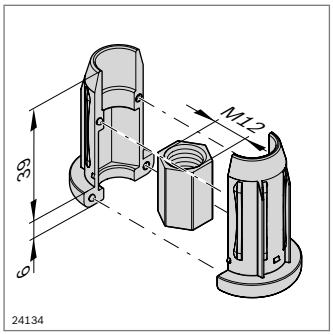

Threaded sleeve D28L, Zn	ESD		No.
		20	**3 842 548 119**

Material: Diecast zinc
Hexagon nut: aluminum

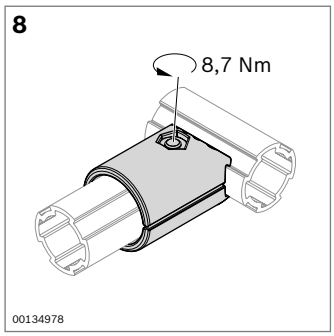

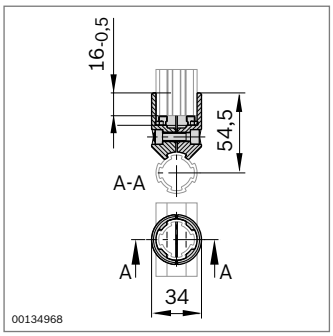

90° connector	ESD		No.	FS
		20	**3 842 541 173**	FS1

Material: Diecast zinc
Scope of delivery: Incl. fastening material (FS)

FS1
ISO 4762 M6x25
ISO 4032 M6

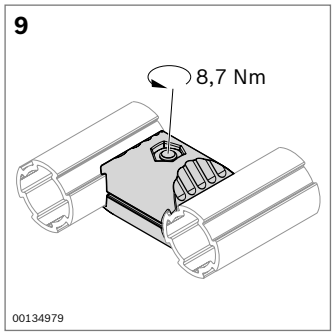

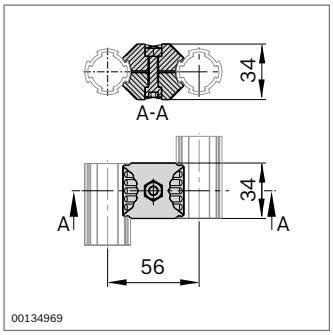

Parallel connector	ESD		No.	FS
		20	**3 842 541 183**	FS1

Material: Diecast zinc
Scope of delivery: Incl. fastening material (FS)

FS1
ISO 4762 M6x25
ISO 4032 M6

10

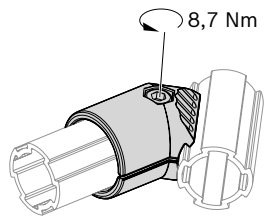

00134980

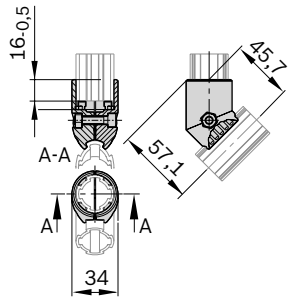

00134970

45° connector	ESD		No.	FS
		20	**3 842 541 175**	FS1

Material: Diecast zinc
Scope of delivery: Incl. fastening material (FS)

FS1
ISO 4762 M6x25
ISO 4032 M6

11

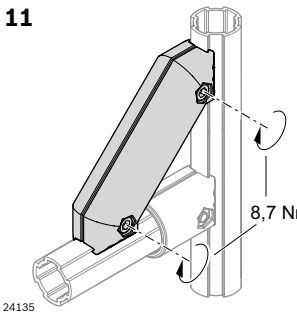

24135

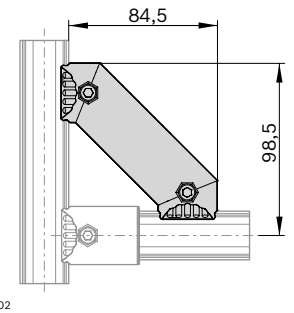

24002

Strut D28L, 45°	ESD		No.	FS
		20	**3 842 548 118**	2xFS1

Material: Diecast zinc
Scope of delivery: Incl. fastening material (FS)

FS1
ISO 4762 M6x25
ISO 4032 M6

12

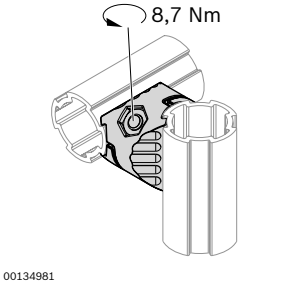

00134981

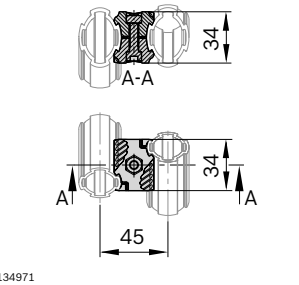

00134971

Cross connector	ESD		No.	FS
		20	**3 842 541 181**	FS1

Material: Diecast zinc
Scope of delivery: Incl. fastening material (FS)

FS1
ISO 4762 M6x25
ISO 4032 M6

13

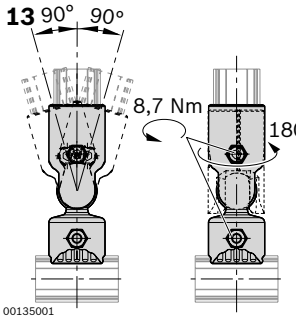

00135001

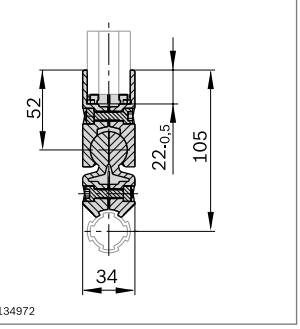

00134972

0°-90° connector	ESD		No.	FS
		20	**3 842 541 178**	2xFS1

Material: Diecast zinc
Scope of delivery: Incl. fastening material (FS)

FS1
ISO 4762 M6x25
ISO 4032 M6

14

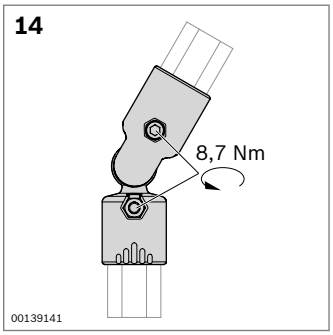

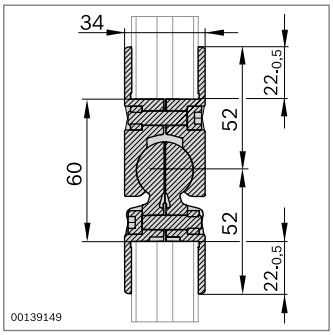

0°-90° D28 connector	ESD		No.	FS
		20	**3 842 543 480**	2xFS1

Material: Diecast zinc
Scope of delivery: Incl. fastening material (FS)

FS1
ISO 4762 M6x25
ISO 4032 M6

15

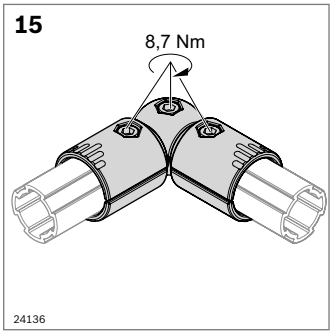

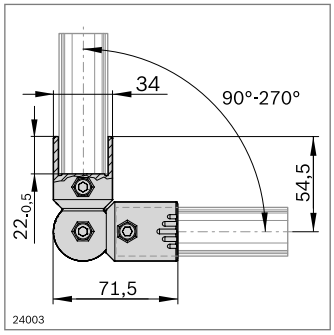

- Corner piece D28 for easy adjustment within a 15° range
- Swivel range: 90°-270°

Corner piece D28	ESD		No.	FS
		20	**3 842 548 123**	3xFS1

Material: Diecast zinc
Scope of delivery: Incl. fastening material (FS)

FS1
ISO 4762 M6x25
ISO 4032 M6

16

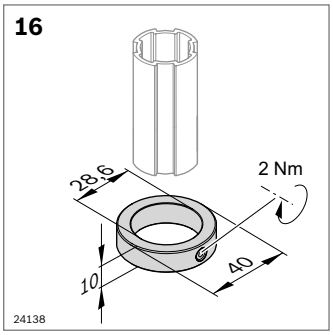

Retaining ring D28L	ESD		No.	FS
		20	**3 842 548 122**	FS2

Material: Aluminum
Scope of delivery: Incl. fastening material (FS)

FS2
ISO 4026 M6x6

17

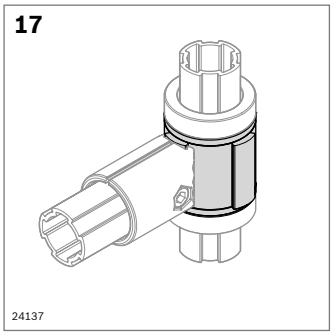

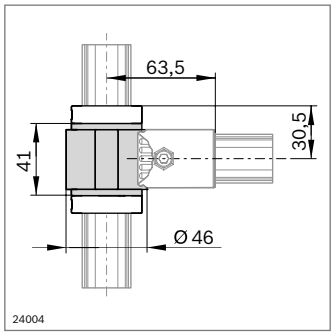

- For axial shifting along the D28L or D28L, N10 round tube; the retaining ring defines the end position.
- Construction of swiveling applications

Swivel bearing D28L		No.
	20	**3 842 548 121**

Material: Aluminum,
Socket: POM; black

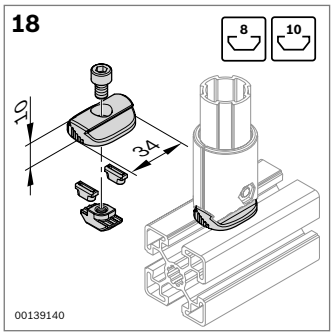

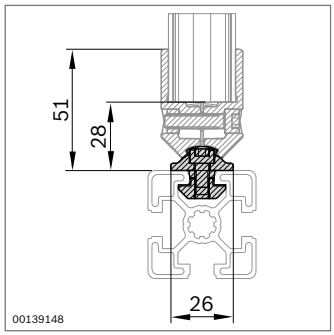

- N8, N10 adapter for connecting an MGE strut profile (8 mm, 10 mm slots)

N8, N10 adapter	ESD		No.	FS
		20	**3 842 543 272**	FS4, FS5

Material: Diecast zinc
Scope of delivery: Incl. fastening material (FS)

FS4
ISO4762 M6x10
M6 8

FS5
ISO4762 M6x12
2x M6 10

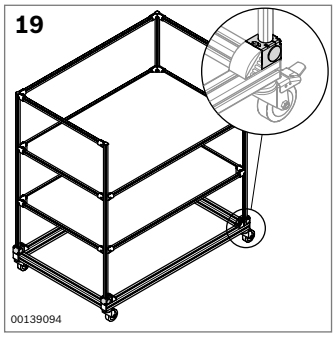

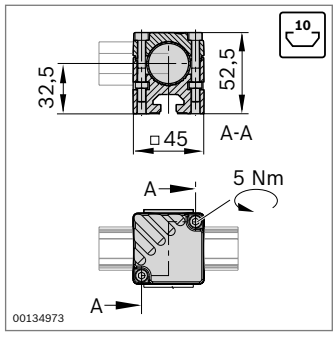

- N10/45 adapter for connecting D28L or D28L, N10 round tubes to profiles with a 10 mm slot

N10/45 adapter	ESD		No.	FS
		20	**3 842 541 187**	2xFS3

Material: Adapter: Diecast zinc
Cap: PE
Scope of delivery: Incl. cap, fastening material (FS)

FS3
ISO 4762 M5x40
DIN 934 M5

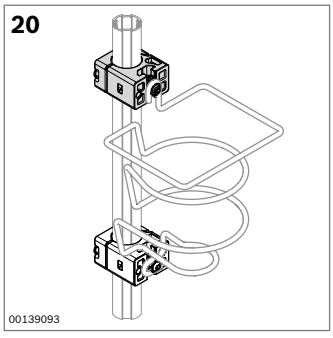

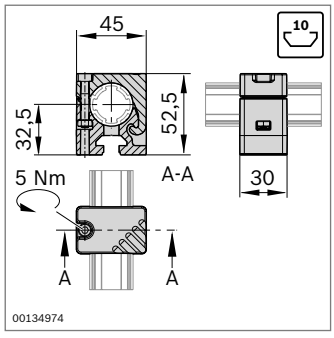

- N10/30 adapter for mounting light accessories such as a bottle holder to a D28L round tube

N10/30 adapter	ESD		No.	FS
		20	**3 842 541 190**	FS6

Material: Diecast zinc
Scope of delivery: Incl. fastening material (FS)

FS6
ISO 4762 M5x30
DIN 934 M5

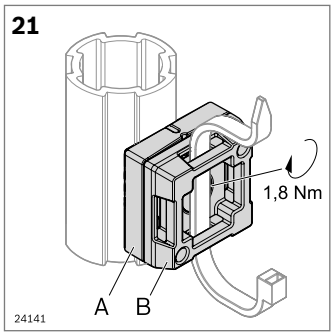

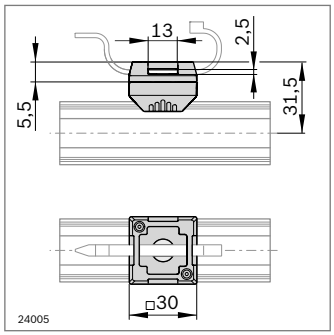

▶ For attaching cable ties

Adapter fix D28L		No.	FS
A + B	20	**3 842 548 120**	FS7

Material: PA66 (conductive); black
Scope of delivery: Incl. fastening material (FS)

FS7
ISO 10642
M5x10

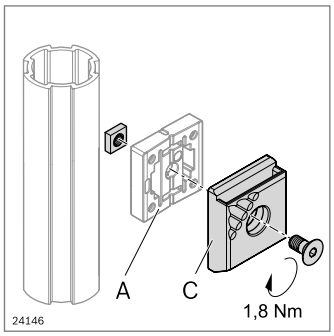

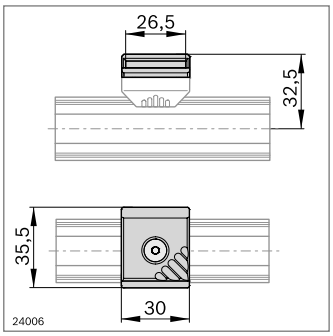

▶ For attaching containers using the container mount

Container mount	ESD		No.	FS
C		10	**3 842 544 797**	FS7

Material: PA66 (conductive); black
Scope of delivery: Incl. fastening material (FS)

FS7
ISO 10642
M5x10

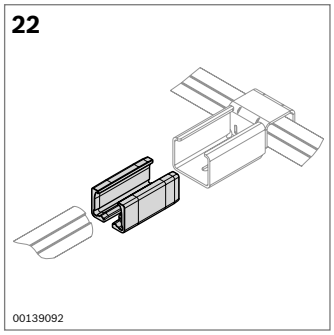

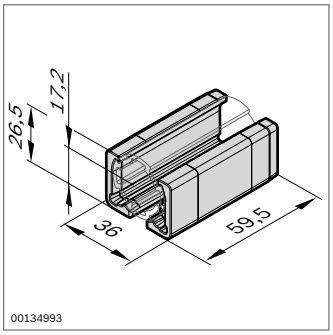

▶ XLean adapter for combination with XLean. The XLean adapter connects the D28L round tube with the XLean rail holder (p. 12-26)

XLean adapter	ESD		No.
		20	**3 842 541 296**

Material: PA66 (conductive); black

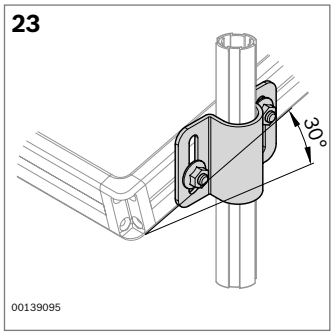

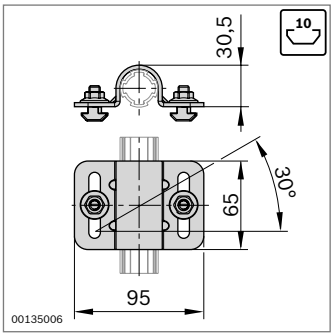

▶ D28L, N10 tube clamp for fastening material shelves with a 10 mm slot to the D28L round tube; oblique positioning up to 30 degrees is possible

Tube clamp D28L, N10	ESD		No.	FS
		20	**3 842 541 193**	2xFS8

Material: Steel; galvanized
Scope of delivery: Incl. fastening material (FS)

FS8
M8
M8x20
10

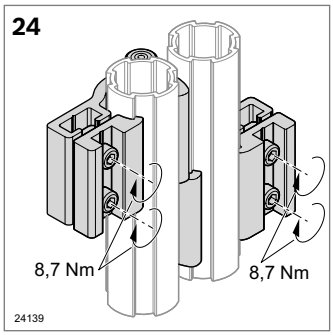

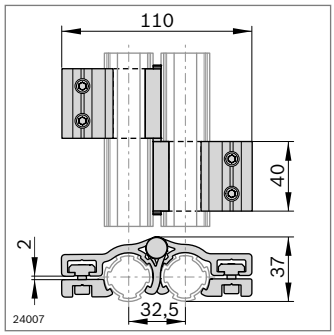

- Opening angle: 180°
- For mounting D28L round tube

Hinge D28L/D28L	ESD		No.	FS
		2	**3 842 548 126**	4xFS9, FS10

Material: aluminum
Scope of delivery: Incl. fastening material (FS)

FS9
ISO4762 M6x10
M6 8

FS10
ISO8741 6x60
DIN125 A6,4

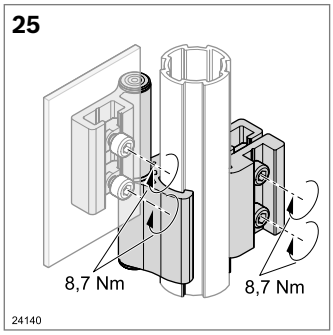

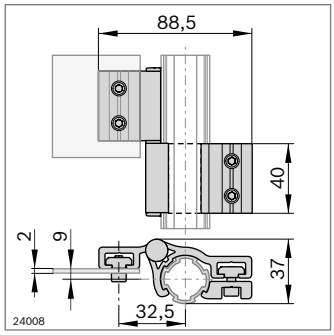

- Opening angle: 180°
- For mounting surface elements

Hinge D28L/-	ESD		No.	FS
		2	**3 842 548 127**	2xFS9, FS10

Material: Aluminum
Scope of delivery: Incl. fastening material (FS)

FS9
ISO4762 M6x10
M6 8

FS10
ISO8741 6x60
DIN125 A6,4

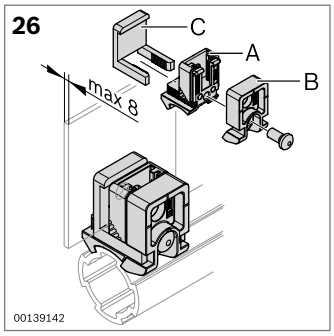

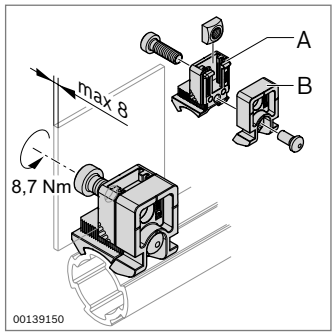

- Plastic Variofix block for fastening surface elements with a snap-in clip or screw
- Variofix remover for releasing the snap-in clip (p. 14-7)

Variofix block PA		No.	FS
A + B	20	**3 842 543 311**	FS11, FS12

Material: PA66 (conductive); black
Scope of delivery: Incl. fastening material (FS)

FS11
ISO 4762 M6x16
DIN 557 M6

FS12
M5x10

Snap-in clip		No.
C	10	**3 842 184 738**

Material: PA6; transparent

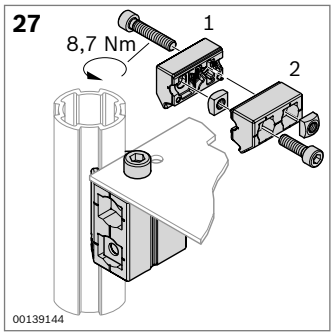

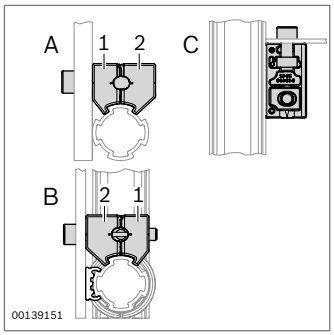

- Diecast zinc Variofix block for fastening surface elements
- Three arrangements possible (“A”, “B”, “C”)

Variofix block Zn	ESD		No.	FS
		20	**3 842 543 494**	FS13

Material: Diecast zinc
Scope of delivery Incl. fastening material (FS)

FS13
ISO 4762
M6x22
ISO 4762
M6x30
2x DIN 557
M6

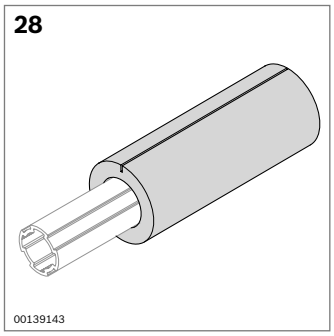

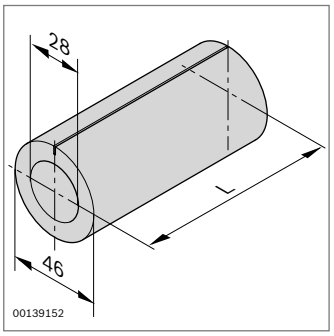

- Bumper for round tube D28 and D28L

Impact protection device	L (mm)		No.
	2000	10	**3 842 544 637**

Material: PE-LD; gray

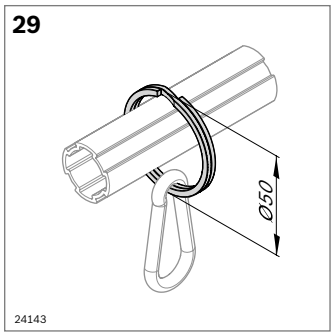

- For designing simple tool holders

Ring D50		No.
	20	**3 842 548 131**

Material: Steel; nickel-plated

Spring hook		No.
	1	**0 842 901 309**

Material: Steel, galvanized

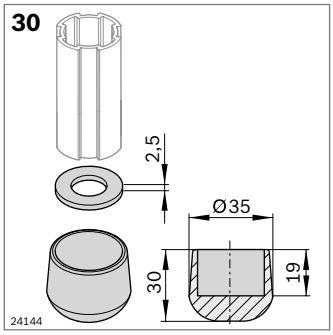

- Non-slip design of flow racks and stands

Rubber foot D28	ESD		No.	FS
		20	**3 842 548 128**	FS14

Material: NR/SBR (conductive); black

FS14

ISO 7089-14-200HV-CM

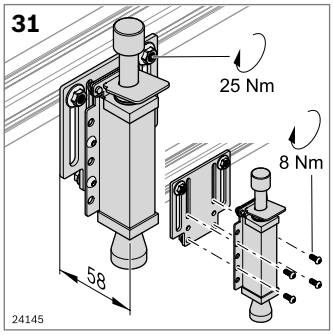

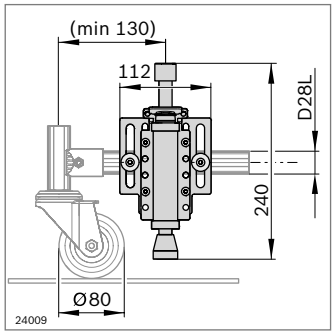

- To stop material shuttles ergonomically at just one point
- All-purpose option for attachment to different round tubes and profile cross-sections
- Clamping travel stopper: 34 mm

Stopper D28L, N10	No.	FS
	3 842 548 132	4xFS15, 2xFS16

Material: Stopper: stainless steel .EPDM
Attachment plate: aluminum

Scope of delivery: Incl. fastening material (FS)

FS15

ISO 7380 M6x14

M6

FS16

ISO 7380 M6x35

DIN9021 6,4

M8

M8x20

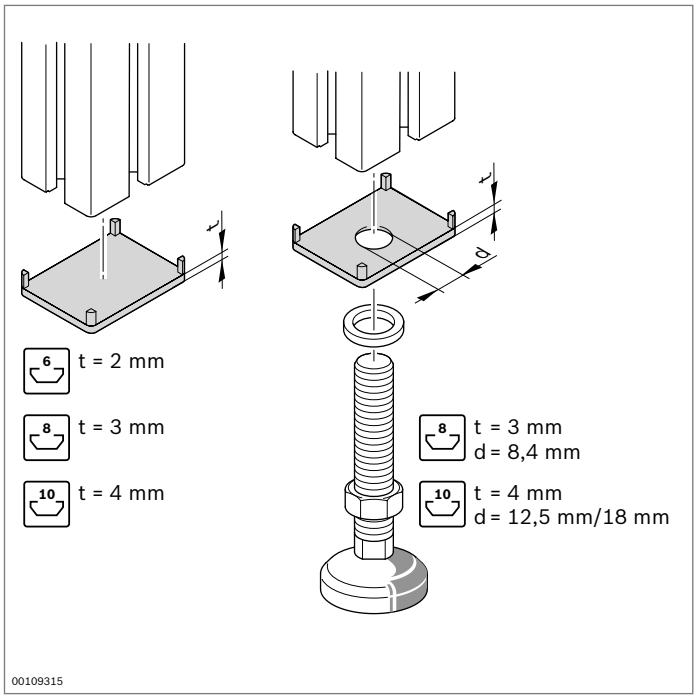

Cap
Cap with hole

- To prevent injuries at open profile ends
- Attractive design
- Cap with hole for use with leveling feet and rollers
- Cap material: PA or PP

Order information for the caps can be found in the profile section

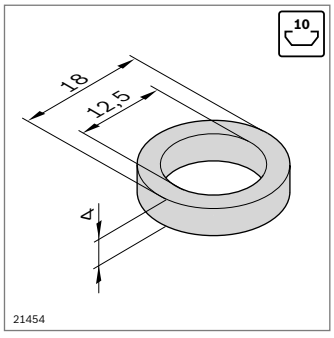

Bearing ring

- For caps with hole
- For M12 threads
- To protect the caps when tightening accessories

Bearing ring		No.
	100	**3 842 536 321**

Material: stainless steel

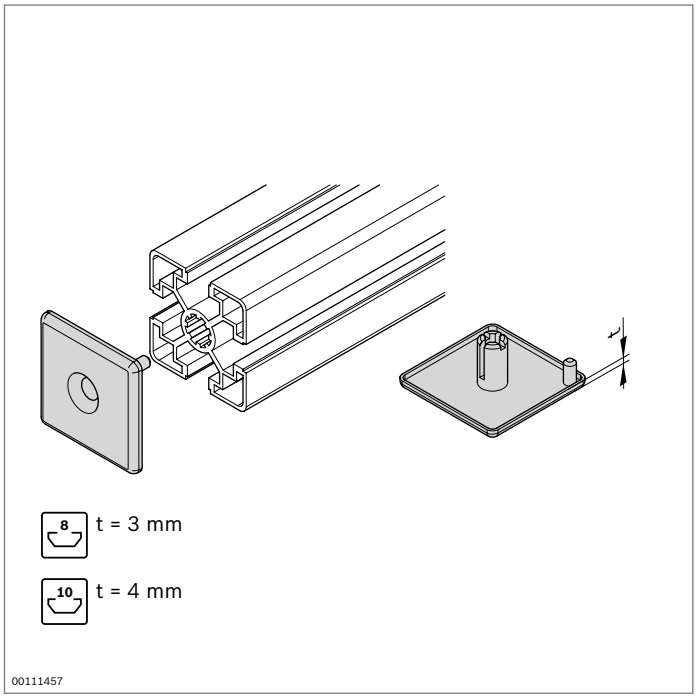

Diecast zinc cover cap

- Shock-proof
- Resistant to aggressive media
- Fastening with countersunk screw; profile finishing not required

Cap		L1xL2	No.	FS
30x30-ZN		30x30	**3 842 518 204**	FS1
40x40-ZN		40x40	**3 842 541 807**	FS2
45x45-ZN		45x45	**3 842 518 205**	FS2

Material: Diecast zinc

FS1

DIN 7991
M4x16

FS2

DIN 7991
M6x16

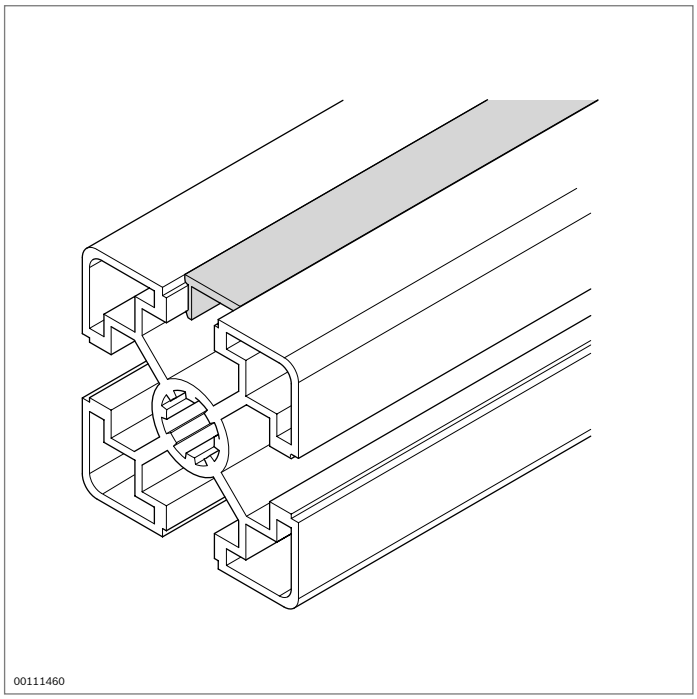

Cover profiles

- For mounting cables
- To prevent dirt from entering the profile slot
- Attractive design
- Soft PVC cover profile for 6 mm slot is provided as a roller
- Flush with profile
- An ESD-conductive connection between the cover profile and the strut profile must ensured through a design solution, e.g. screw

Cover profile, 6 mm slot	Color	Material	ESD	L (mm)		No.
00109365	Colorless, natural	Aluminum, anodized		2000	10	**3 842 523 254**
00117777	Light gray (RAL 7035)	Soft PVC		10000	1	**3 842 542 435**
Cover profile, 8 mm slot	**Color**	**Material**	**ESD**	**L** (mm)		**No.**
00109366	Colorless, natural	Aluminum, anodized		2000	10	**3 842 523 256**
00109367	Signal gray (RAL 7004)	PP		2000	10	**3 842 548 878**
	Black (RAL 9005)	PP		2000	10	**3 842 548 879**
	Black (RAL 9005)	Hard PVC		2000	10	**3 842 501 962**
	Light gray (RAL 7035)	Hard PVC		2000	10	**3 842 518 375**
	Red (RAL 3020)	Hard PVC		2000	10	**3 842 518 376**
	Yellow (RAL 1023)	Hard PVC		2000	10	**3 842 518 377**
	Yellow (RAL 6032)	Hard PVC		2000	10	**3 842 549 882**
	Blue (RAL 5010)	Hard PVC		2000	10	**3 842 538 956**
	Orange (RAL 2004)	Hard PVC		2000	10	**3 842 538 958**
	Colorless, transparent	Hard PVC		2000	10	**3 842 503 073**
Cover profile, 10 mm slot	**Color**	**Material**	**ESD**	**L** (mm)		**No.**
00109368	Colorless, natural	Aluminum, anodized		2000	10	**3 842 523 258**
19502	Signal gray (RAL 7004)	Hard PVC		2000	10	**3 842 548 876**
	Black (RAL 9005)	Hard PVC		2000	10	**3 842 548 877**
	Black (RAL 9005)	Hard PVC		2000	10	**3 842 146 901**
	Light gray (RAL 7035)	Hard PVC		2000	10	**3 842 518 367**
	Red (RAL 3020)	Hard PVC		2000	10	**3 842 518 368**
	Yellow (RAL 1023)	Hard PVC		2000	10	**3 842 518 369**
	Yellow (RAL 6032)	Hard PVC		2000	10	**3 842 549 888**
	Blue (RAL 5010)	Hard PVC		2000	10	**3 842 538 955**
	Orange (RAL 2004)	Hard PVC		2000	10	**3 842 538 957**
	Colorless, transparent	Hard PVC		2000	10	**3 842 191 182**

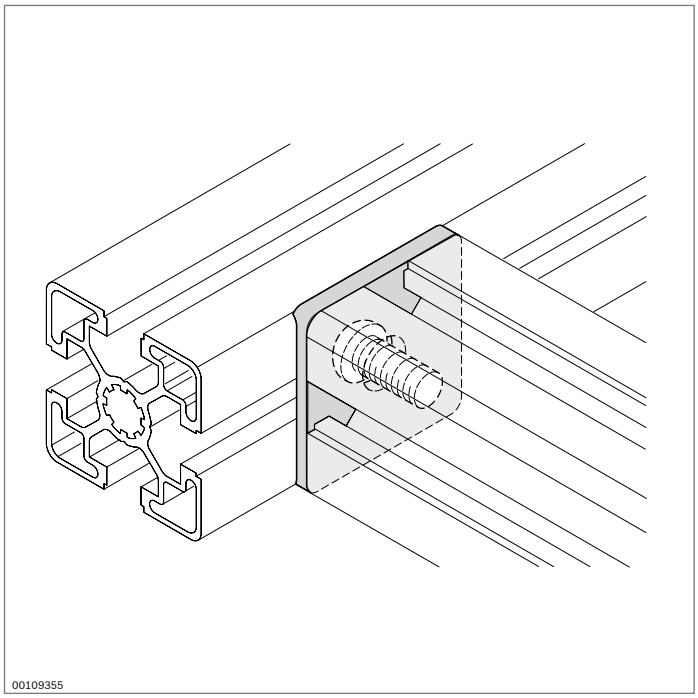

Radial compensation

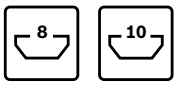

- For avoiding gaps and sharp edges on T-connections between two profiles using a central bolt or quick connector (note spacing of hole from the end of the profile)
- Slot segments can be broken out to support surface elements in the slot
- Important note: the load carrying capacity of the profile connection is reduced when using radial compensation (see “Technical data”, page 19-10)!

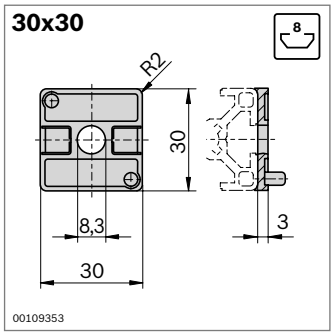

Radial compensation	Slot		No.
30x30	8	10	**3 842 524 415**
Material:	PA; light gray RAL 7035		

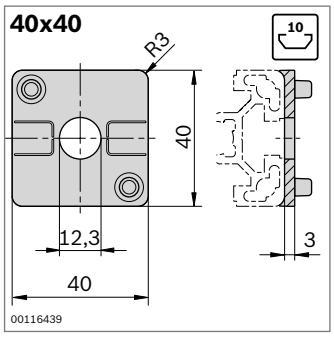

Radial compensation	Slot		No.
40x40	10	10	**3 842 529 026**
Material:	PA; light gray RAL 7035		

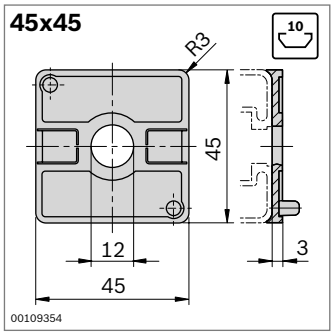

Radial compensation	Slot		No.
45x45	10	10	**3 842 524 414**
Material:	PA; light gray RAL 7035		

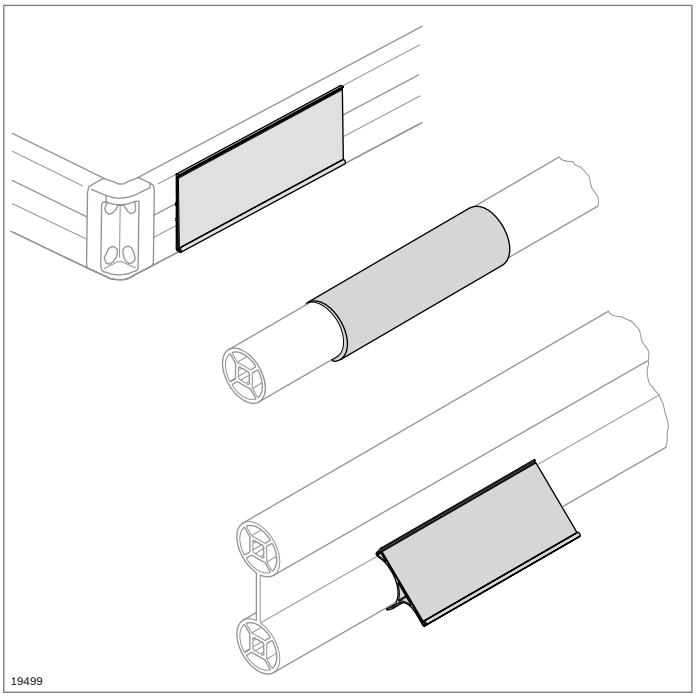

Lettering clips

- For labeling profiles and tubular cross ties

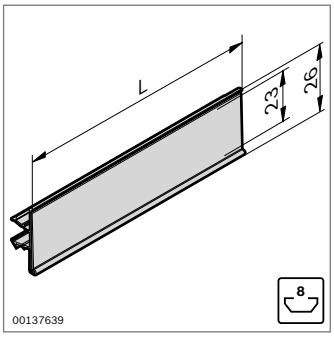

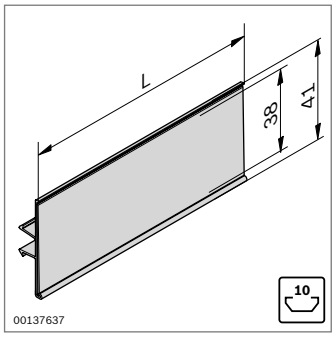

- Lettering clip for strut profiles with 8 mm and 10 mm slot

Lettering clip	Slot	L (mm)		No.
	8	2000	20	**3 842 537 113**
	8	102	20	**3 842 537 650**
	10	2000	20	**3 842 537 116**
	10	102	20	**3 842 537 651**

Material: Hard PVC, light gray (RAL 7035), transparent

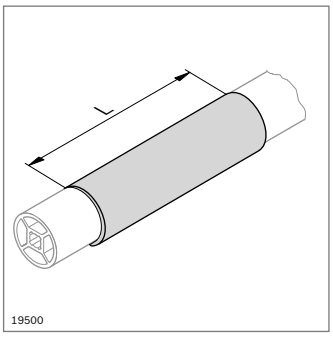

- Self-adhesive
- Lettering clip with rounded text surface for strut profiles D28; D28L; D28L, N10, and D28x55
- Label height 38 mm

Lettering clip	L (mm)		No.
For tubular cross ties	2000	20	**3 842 535 136**
	120	20	**3 842 538 093**

Material: Hard PVC, colorless, transparent

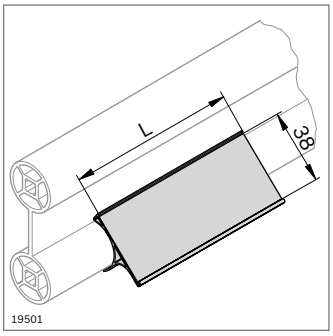

- Self-adhesive
- Lettering clip with flat text surface for strut profiles D28; D28L; D28L, N10, and D28x55

Lettering clip	L (mm)		No.
For tubular cross ties	2000	20	**3 842 537 119**
	120	20	**3 842 537 652**

Material: Hard PVC, light gray (RAL 7035), transparent

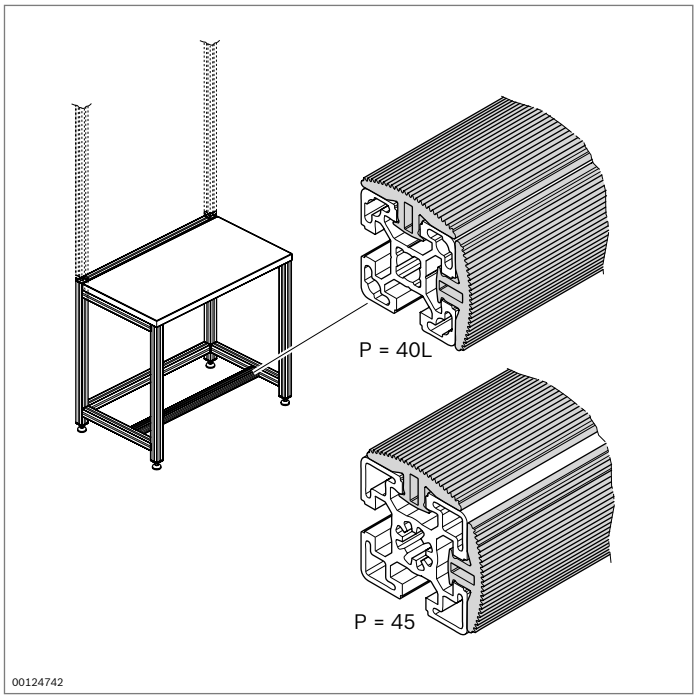

Rubber profile
Cloth holder

Rubber profile

- To avoid impact on hard edges, such as when setting down impact-sensitive products
- For use as footrest to clip in from top and front on the cross strut of the workstation
- Very simple and inexpensive
- Suitable for the construction of ESD workstations

Rubber profile	L (mm)	ESD		No.
	30 ... 2000		1	**3 842 994 979 / L**
	2000		10	**3 842 537 135**

Material: EPDM; conduction resistance
RA = $1x10^3$ – $1x10^9$ Ω

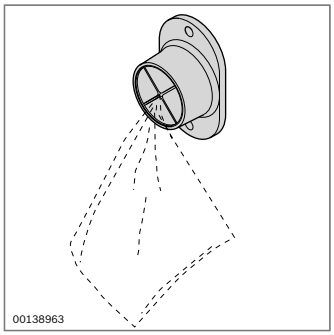

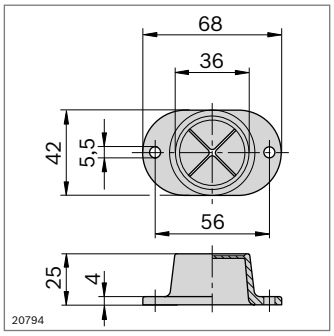

Screwed-on cloth holder

- For hanging cleaning cloths

Required accessories:

- T-nut, 10 mm slot, M5 (**3 842 530 283**) (p. 3-4)
- Screw DIN 7984 M5x12

Screwed-on cloth holder	No.
	1 845 719 000

Material: PE; black

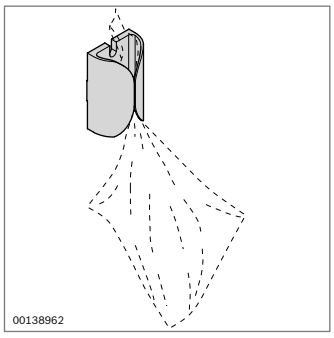

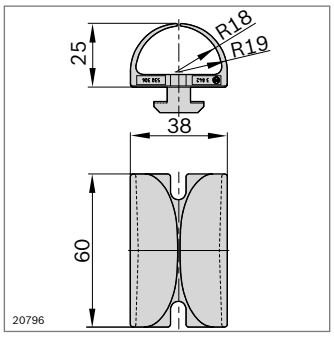

Cloth holder with clamp base

- With injection molded clamp base for direct assembly on strut profile with 10 mm slot
- Can also be used as a cable guide

Cloth holder with clamp base	No.
	3 842 530 306

Material: PA6, black

Connection elements

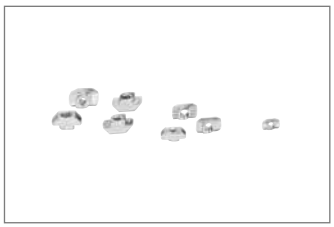

T-nut (p. 3-4)
Collar screw (p. 3-5)

Flange nut, T-bolt (p. 3-6)

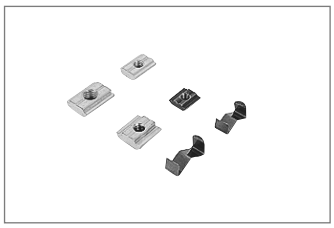

Sliding block (p. 3-8)

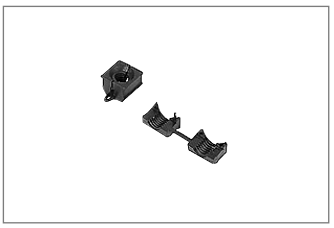

Straddling nut (p. 3-10)

Parallel connector (p. 3-11)

Tensioning connector
(p. 3-12)

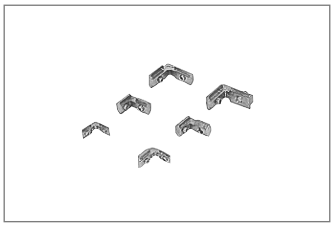

Inner bracket (p. 3-13)
Inner bracket R (p. 3-14)

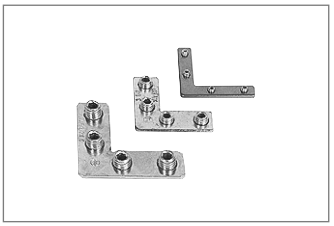

Miter bracket (p. 3-16)

Bracket (p. 3-17)

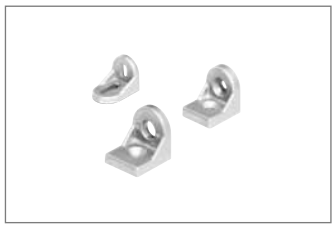

Bracket R (p. 3-28)

Steel bracket (p. 3-30)

Metal bracket, Supporting
bracket (p. 3-31)

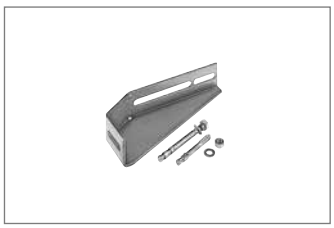

Foundation bracket (p. 3-32)

Holder (p. 3-33)

Supporting bracket (p. 3-35)

Profile connector (p. 3-37)

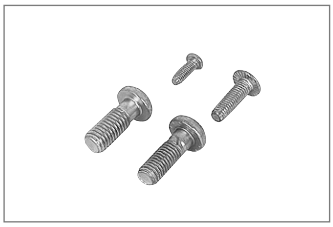

Central bolt (p. 3-38)

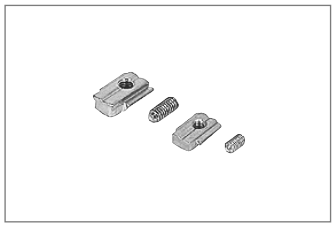

Anti-torsion element (p. 3-39)

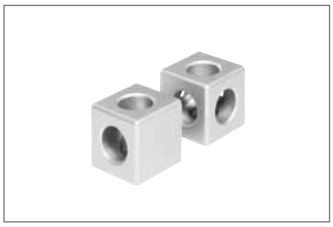

Cubic connector (p. 3-40)

Corner bracket (p. 3-44)

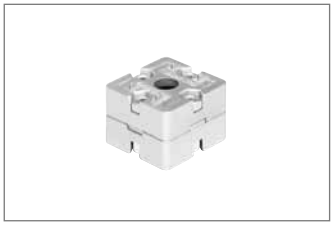

End connector (p. 3-46)

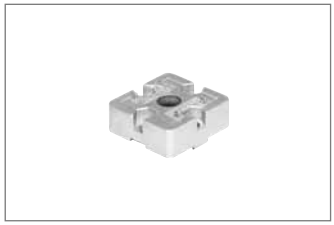

T-connector (p. 3-48)

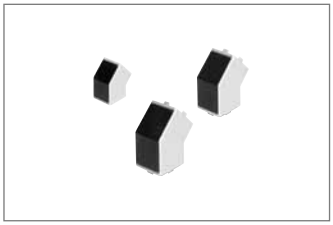

45° connector (p. 3-50)

Quick connector (p. 3-51)

Quick connector, bendable (p. 3-54)

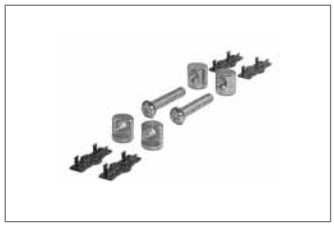

Longitudinal end connector (p. 3-56)

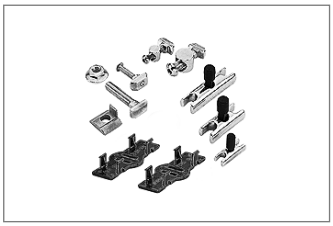

Bolt connector (p. 3-57)

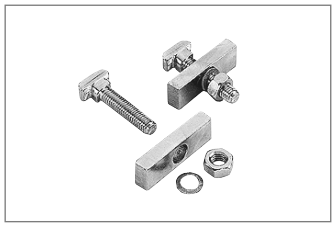

Cross connector (p. 3-59)

Connection elements, selection criteria

● recommended ◐ suitable ○ unsuitable

	Bracket	Inner bracket	Bolt connector	Central bolt	Quick connector	T-connector	Tensioning connector
High feed force	●	○	●	●	●	●	●
High moment	●	○	●	◐	○	◐	◐
High torsional moment	◐	○	●	○	○	●	●
Minimal finishing work	●	●	◐ D17	◐ M12 9,8	◐ D17	●	●
Minimal assembly	●	●	○	●	●	○	●
Low parts costs	◐	◐	○	●	◐	○	◐
Subsequent mounting in closed frame	●	○	●	○	○	◐	●
Adjustment possible	●	◐	●	○	●	●	●
Support of surface elements	◐	◐	○	●	●	○	◐
Internal connection (concealable)	○	●	●	●	◐	◐	●

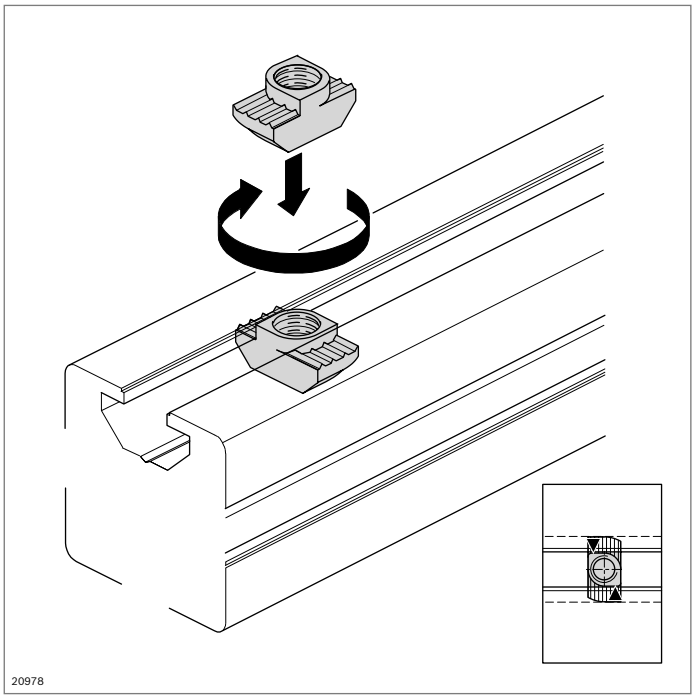

T-nut

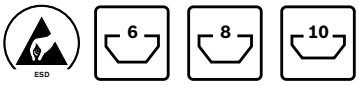

- Standard element for secure, conductive connections
- Stop for correct positioning in the profile slot
- Stainless steel T-nut, e.g. for outdoor or cleanroom applications
- Profile machining: not required

Technical data (p. 19-5)

Accessories:
insulating cap (p. 3-5)

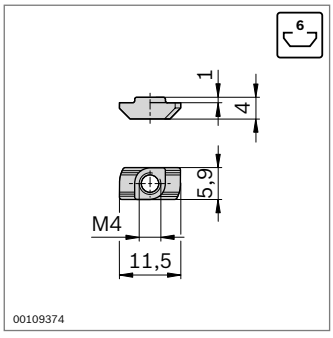

Slot	F_{max}
6	1700 N

T-nut, 6 mm slot	Slot	M	ESD		No.
Steel, galvanized	6	M4		100	**3 842 523 135**
Stainless steel	6	M4		100	**3 842 536 599**

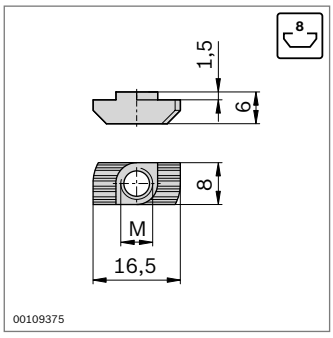

Slot	F_{max}
8 (M6)	4000 N

T-nut, 8 mm slot	Slot	M	ESD		No.
Steel, galvanized	8	M4		100	**3 842 501 751**
		M5		100	**3 842 501 752**
		M6		100	**3 842 501 753**
Stainless steel	8	M4		100	**3 842 536 600**
		M5		100	**3 842 536 601**
		M6		100	**3 842 536 602**

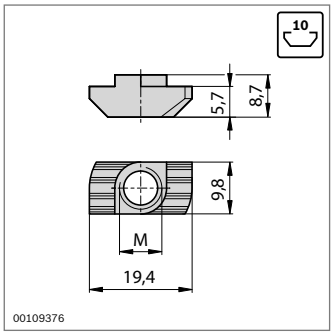

Slot	F_{max}
10 (M8)	6000 ... 18000 N[1)]

[1)] Depending on profile (p. 19-5)

T-nut, 10 mm slot	Slot	M	ESD		No.
Steel, galvanized	10	M4		100	**3 842 530 281**
		M5		100	**3 842 530 283**
		M6		100	**3 842 530 285**
		M8		100	**3 842 530 287**
Stainless steel	10	M4		100	**3 842 536 606**
		M5		100	**3 842 536 605**
		M6		100	**3 842 536 604**
		M8		100	**3 842 536 603**

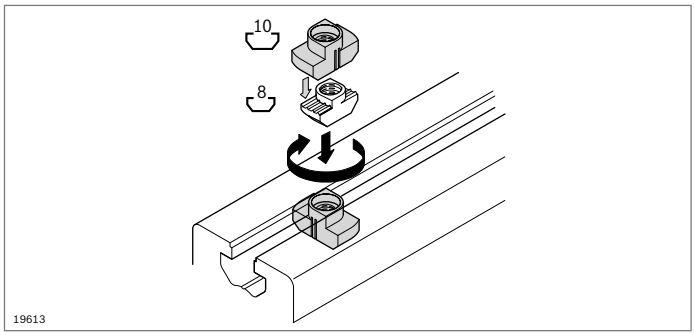

- Insulating cap for decoupling directly grounded components; for use with T-nuts for 8 mm slots in a 10 mm slot

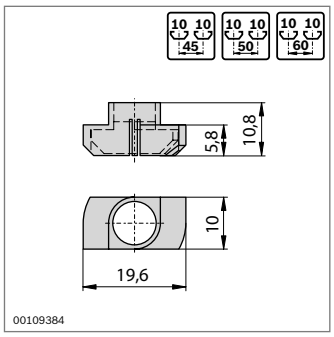

Insulating cap for T-nut, 8 mm slot	Slot		No.
	10	10	**3 842 524 012**

Material: high-strength PA, black

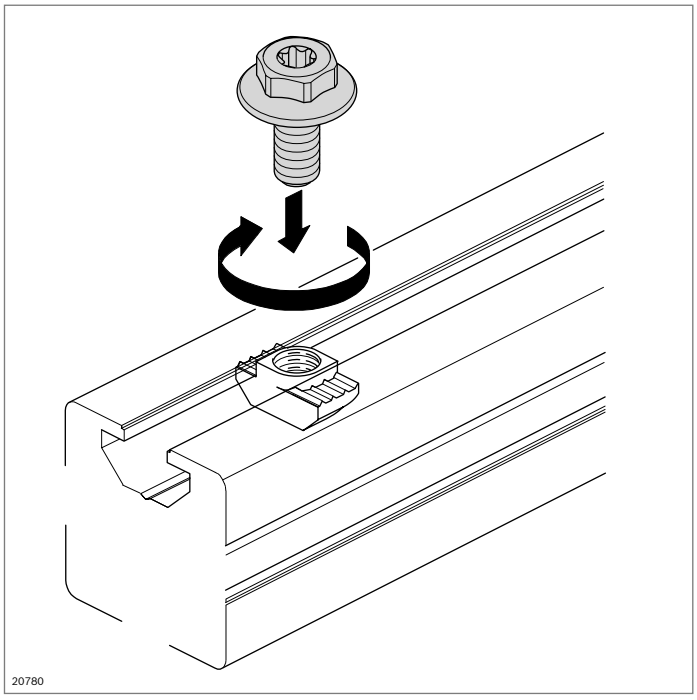

Collar screw

- Collar screw with multi-function head for tightening with ring/open-end wrench (WS 13) or Torx screwdriver (T40)
- Machine threading possible
- Preferably for bracket fastening
- Quick and simple assembly
- Excellent force transmission via broad flange
- ESD-capable
- Polymer spot for precise positioning of T-nut

Tool:
offset screwdriver (p. 14-6)

Accessories:
T-nut (p. 3-4)

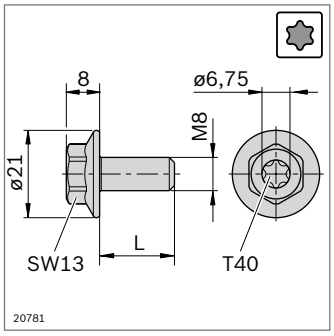

Collar screw	M	L (mm)	ESD		No.
M8x18-SW13-T40[1]	M8	18		100	**3 842 541 246**
M8x20-SW13-T40[2]	M8	20		100	**3 842 541 409**

[1] For 40/40 and 60/60 brackets

[2] For all other brackets for 10 mm slot

Material: Steel, galvanized

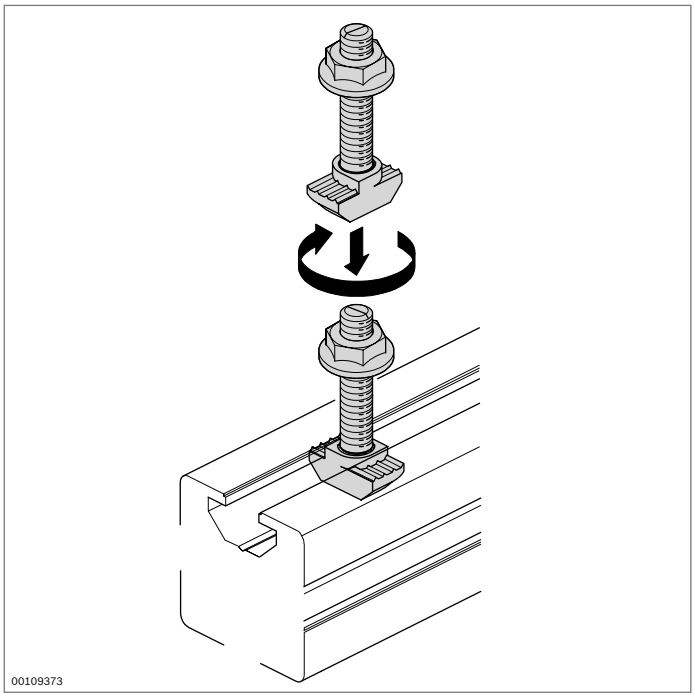

Flange nut
T-bolt

- Secure, conductive connection
- Notch at bolt end as marker for correct position identification
- Profile machining: not required

Technical data (p. 19-5)

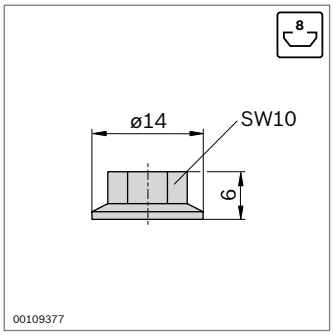

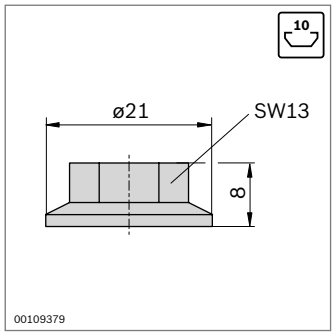

Flange nut	Slot	M	ESD		No.
	8	M6		100	**3 842 523 925**
	10	M8		100	**3 842 345 081**

Material: Steel, galvanized

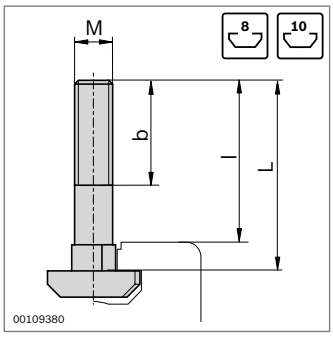

Slot	F_{max}
8	4000 N
10	6000 ... 18000 N[1)]

[1)] Depending on profile (p. 19-5)

T-bolt	Slot	MxL	b (mm)	l (mm)	ESD		No.
	8	M6x16	10	14		100	**3 842 523 920**
		M6x20	14	18		100	**3 842 523 921**
		M6x25	18	23		100	**3 842 523 922**
	10	M8x20	14	14		100	**3 842 528 715**
		M8x25	19	19		100	**3 842 528 718**
		M8x30	24	24		100	**3 842 528 721**
		M8x40	22	34		100	**3 842 528 724**
		M8x50	22	44		100	**3 842 528 727**

Material: Steel, galvanized

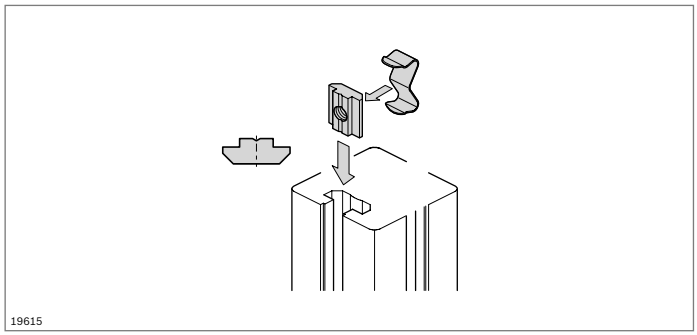

Sliding block, sliding block profile

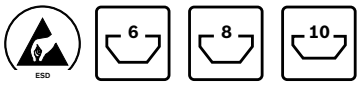

- Sliding block for reliable absorption of high forces
- Sliding block profile for self-assembly of individual fastening elements
- Profile machining: not required
- The spring assists with the assembly and positioning of the sliding block and swivel-in sliding block (p. 3-8)

Technical data (p. 19-5)

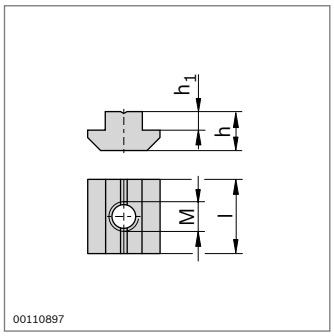

Slot	F_{max}
6 (M5)	3 000 N
8 (M8)	6 000 N
10 (M8)	8 000 ... 24 000 N[1)]

[1)] Depending on profile (p. 19-5)

Sliding block	Slot	M	h (mm)	h_1 (mm)	l (mm)	ESD		No.
Steel, galvanized	6	M4	4.0	1.0	12		100	**3 842 542 692**
		M5	4.0	1.0	12		100	**3 842 542 693**
	8	M4	6.0	2.0	16		100	**3 842 514 928**
		M5	6.0	2.0	16		100	**3 842 514 929**
		M6	6.0	2.0	16		100	**3 842 514 930**
		M8	6.0	2.0	16		100	**3 842 514 931**
	10	M5	10.5	5.0	20		100	**3 842 528 741**
		M6	10.5	5.0	20		100	**3 842 528 738**
		M8	10.5	5.0	20		100	**3 842 528 735**
Steel, stainless	6	M4	4.0	1.0	20		100	**3 842 523 140**
		M5	4.0	1.0	20		100	**3 842 523 142**
	8	M4	6.0	2.0	16		100	**3 842 547 817**
		M5	6.0	2.0	16		100	**3 842 547 816**
		M6	6.0	2.0	16		100	**3 842 547 815**
		M8	6.0	2.0	16		100	**3 842 547 814**
	10	M5	10.5	5.0	20		100	**3 842 547 813**
		M6	10.5	5.0	20		100	**3 842 547 812**
		M8	10.5	5.0	20		100	**3 842 547 811**

Accessories: Spring (p. 3-9)

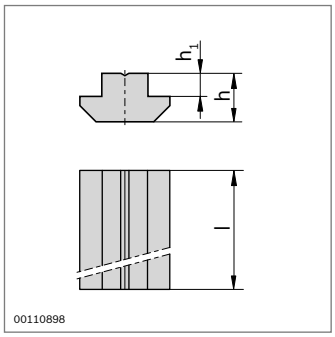

Sliding block profile	Slot	h (mm)	h_1 (mm)	l (mm)	No.
Steel, galvanized	6	4.0	1.0	1000	**3 842 542 694**
	8	6.0	2.0	1000	**3 842 510 078**
	10	10.5	5.0	1000	**3 842 528 744**
Steel, stainless	6	4.0	1.0	1000	**3 842 523 438**

Accessories: Spring (p. 3-9)

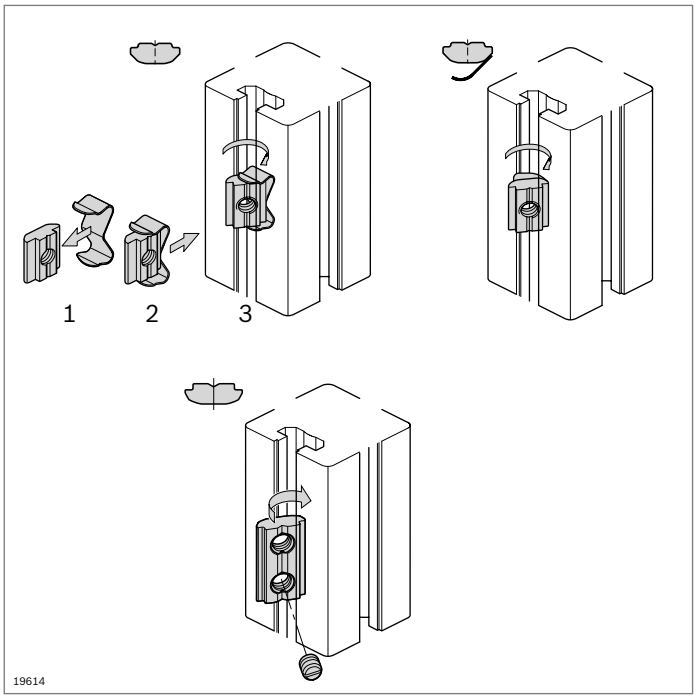

Sliding block, swivel-in
sliding block profile, swivel-in spring

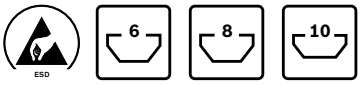

- Swivel-in sliding block profile for self-assembly of individual fastening elements
- The swivel-in sliding block can be inserted directly at the assembly point for easy assembly
- The swivel-in sliding block with spring can be inserted directly at the assembly point and fixed in position thanks to attached springs
- The swivel-in sliding block with headless setscrews permits shake-proof fixing in all positions
- Profile machining: not required

Technical data (p. 19-5)

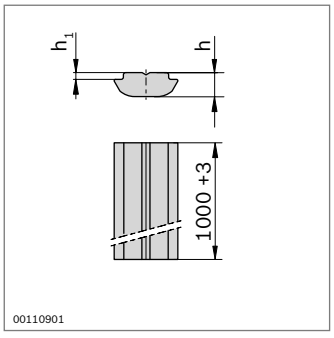

Slot	F_{max}
8 (M8)	2 200 N
10 (M8)	8 000 ... 18 000 N[1)]

[1)] Depending on profile (p. 19-5)

Sliding block profile, swivel-in	Slot	h (mm)	h_1 (mm)	l (mm)	No.
Steel, galvanized	8	4.8	1.0	1000	**3 842 529 327**
	10	5.3	1.5	1000	**3 842 529 325**

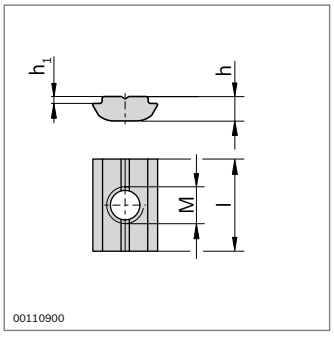

Sliding block, swivel-in	Slot	M	h (mm)	h_1 (mm)	l (mm)	ESD		No.
Steel, galvanized	8	M5	4.8	1.0	16	✓	100	**3 842 529 319**
		M6	4.8	1.0	16		100	**3 842 529 320**
		M8	4.8	1.0	16	✓	100	**3 842 529 321**
	10	M6	5.3	1.5	20		100	**3 842 529 323**
		M8	5.3	1.5	20		100	**3 842 529 324**
Steel, stainless	6	M3	3.0	0.9	12	✓	100	**3 842 547 826**
		M4	3.0	0.9	12		100	**3 842 536 669**
		M5	3.0	0.9	12	✓	100	**3 842 547 825**
	8	M6	4.8	1.0	16		100	**3 842 530 321**
	10	M8	5.3	1.5	20		100	**3 842 530 316**

Accessories: Spring (p. 3-9)

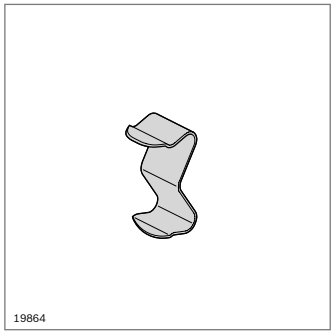

▶ The spring assists with the assembly and positioning of the sliding block and swivel-in sliding block

Spring	Slot		No.
Spring steel, stainless	6	100	**3 842 523 145**
	8	100	**3 842 516 685**
	10	100	**3 842 516 669**

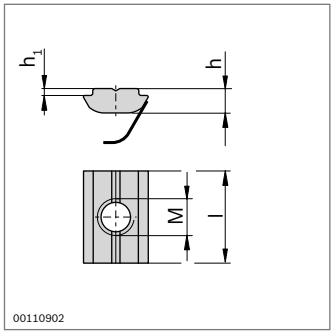

Slot	Fmax
8 (M8)	2 200 N
10 (M8)	8 000 ... 18 000 N[1)]

[1)] Depending on profile (p. 19-5)

Swivel-in sliding block with spring	Slot	M	h (mm)	h_1 (mm)	l (mm)	ESD		No.
Steel, galvanized	8	M4	4.8	1.0	16		100	**3 842 529 294**
		M5	4.8	1.0	16		100	**3 842 529 295**
		M6	4.8	1.0	16		100	**3 842 529 296**
		M8	4.8	1.0	16		100	**3 842 529 297**
	10	M4	5.3	1.5	20		100	**3 842 541 393**
		M5	5.3	1.5	20		100	**3 842 529 298**
		M6	5.3	1.5	20		100	**3 842 529 299**
		M8	5.3	1.5	20		100	**3 842 529 300**
Steel, stainless	8	M4	4.8	1.0	16		100	**3 842 547 824**
		M5	4.8	1.0	16		100	**3 842 547 823**
		M6	4.8	1.0	16		100	**3 842 547 822**
		M8	4.8	1.0	16		100	**3 842 547 821**
	10	M5	5.3	1.5	20		100	**3 842 547 808**
		M6	5.3	1.5	20		100	**3 842 547 807**
		M8	5.3	1.5	20		100	**3 842 547 806**

Material: Spring: spring steel, stainless

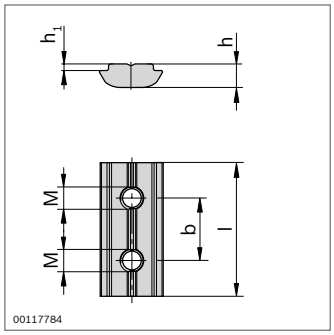

Sliding block, swivel-in, with headless setscrew	Slot	M	b (mm)	h (mm)	h_1 (mm)	l (mm)		No.
Steel, galvanized	8	M5	12	4.8	1.0	24	100	**3 842 536 675**
	10	M5	14	5.3	1.5	30	100	**3 842 536 676**
Steel, stainless	6	M4	8	3.0	0.9	15	100	**3 842 536 673**

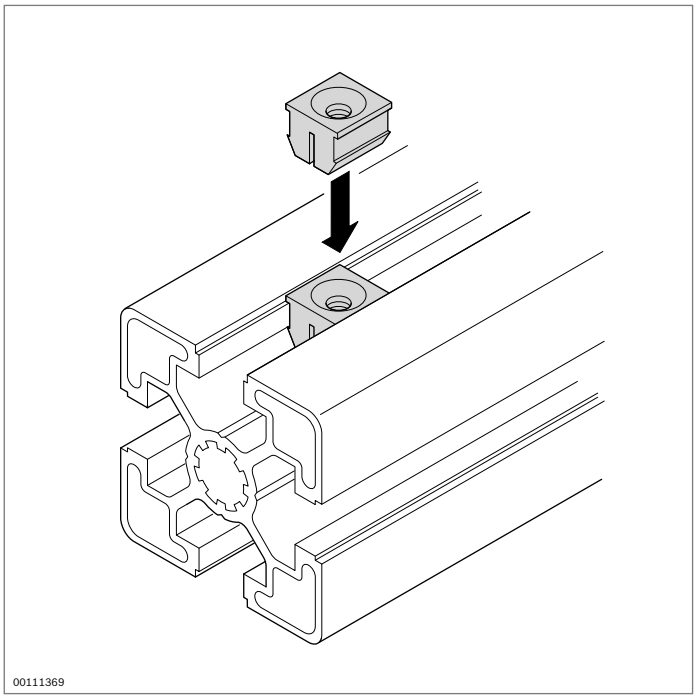

Straddling nut

- For attaching light accessories such as cable fasteners or rings
- Easy assembly by clipping into the profile groove
- Profile machining: not required

Accessories, required:
Countersunk screw

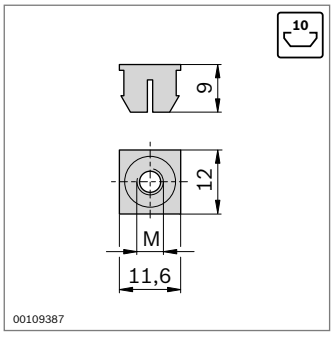

Straddling nut	Slot	M		No.
	10	M4	100	**3 842 111 987**
		M5	100	**3 842 111 988**
		M6	100	**3 842 111 989**

Material: PA; black

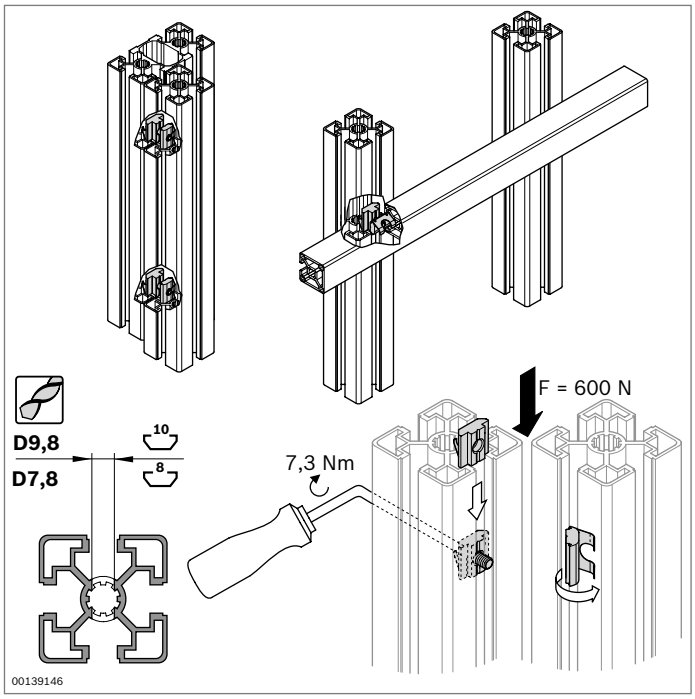

Parallel connector

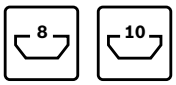

- For a gap-free connection between two strut profiles, parallel to the axis or at any angle
- Parallel connector consisting of two sliding blocks with welded springs for simple assembly
- Attractive-looking interior connection, e.g. for material shelves
- Connection possible in any position
- Transferable displacement force per parallel connector: 600 N
- Profile machining: through-hole

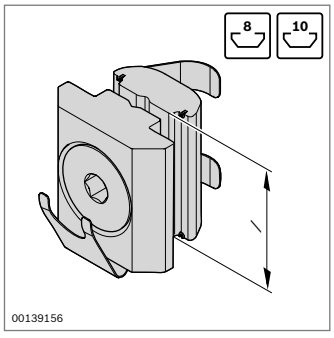

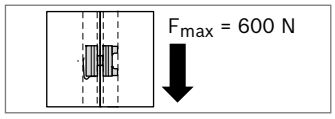

Parallel connector	Slot	l (mm)		No.
	8	16	10	**3 842 542 737**
	10	20	10	**3 842 542 736**

Material: Sliding block: steel, galvanized
Spring: spring steel, stainless

Scope of delivery: Sliding block with spring, swivel-in sliding block with spring, countersunk screw M5

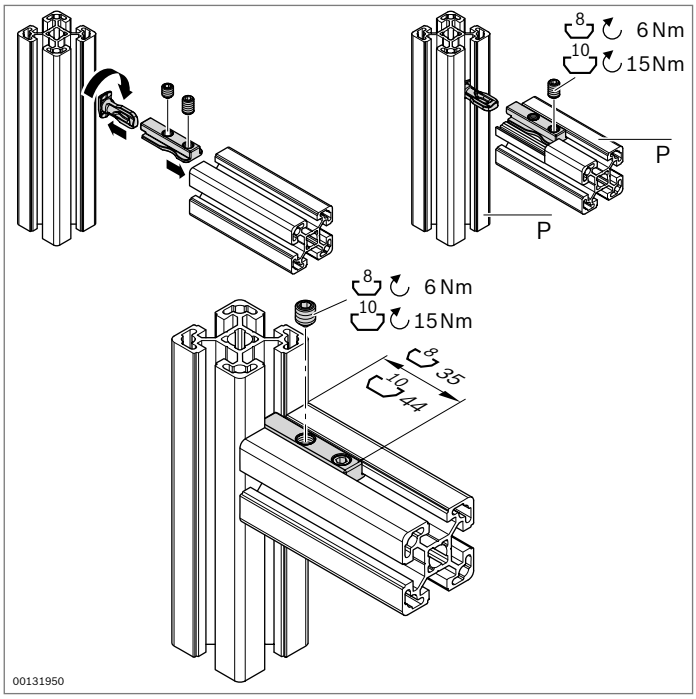

Tensioning connector

- Tensioning connector for fast assembly
- The connector can be moved within the slot
- Easily accessible screws
- Three slots are left free for mounting surface elements
- Profile machining: not required

Technical data (p. 19-8)

P	F_{max}	M_{max}	M_{max}
30x...	1000 N	35 Nm	15 Nm
45x...L	3500 N	110 Nm	30 Nm
40x..., 45x..., 50x..., 90x...	3500 N	110 Nm	30 Nm
60x...	3500 N	195 Nm	60 Nm

Tensioning connector	Slot	P	ESD		No.
8	8	30x...		10	**3 842 538 489**
10L	10	45x...L		10	**3 842 538 491**
10	10	40x..., 45x..., 50x..., 60x..., 90x...		10	**3 842 538 490**

Material: Steel, galvanized

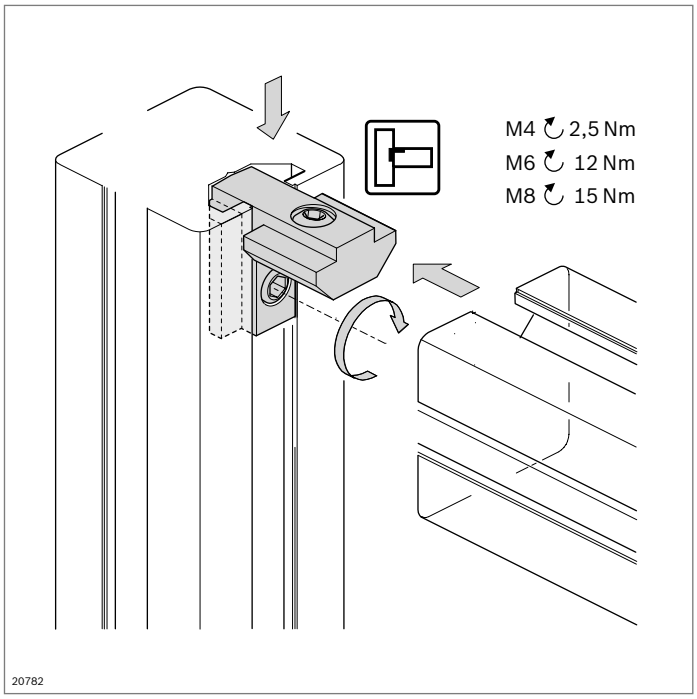

Inner bracket

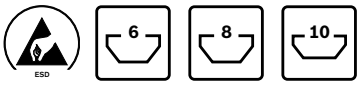

- For elegant, easy-to-assemble profile connections
- Especially suitable for constructing door frames, protective grilles, or partition walls
- The inner bracket, 6 mm slot, can also be used as an inner bracket R, 6 mm slot
- Profile machining: not required

Technical data (p. 19-8)

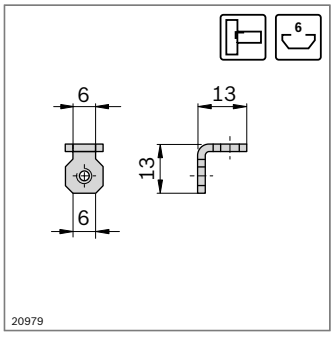

FS1

DIN 915
M4x6

Inner bracket	Slot	ESD		No.	FS
	6 / 6		10	**3 842 535 574**	2xFS1

Material: Sheet steel; galvanized
Fastening material: steel, galvanized
Scope of delivery: Incl. fastening material (FS)

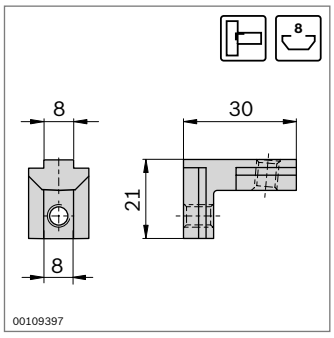

Slot	F_{max}	M_{max}
8 / 8	2200 N	50 Nm

FS2

DIN 913
M6x8

Inner bracket	Slot	ESD		No.	FS
	8 / 8		10	**3 842 535 578**	2xFS2

Material: Cast steel; galvanized
Fastening material: steel, galvanized
Scope of delivery: Incl. fastening material (FS)

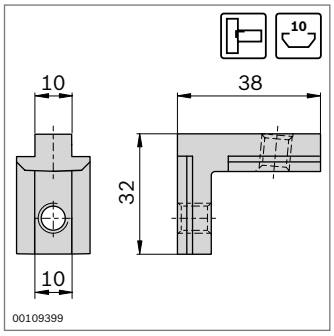

Slot	F_{max}	M_{max}
10 / 10	2800 N	100 Nm

FS3

DIN 913
M8x12

Inner bracket	Slot	ESD		No.	FS
	10 / 10		10	**3 842 535 572**	2xFS3

Material: Cast steel; galvanized
Fastening material: steel, galvanized
Scope of delivery: Incl. fastening material (FS)

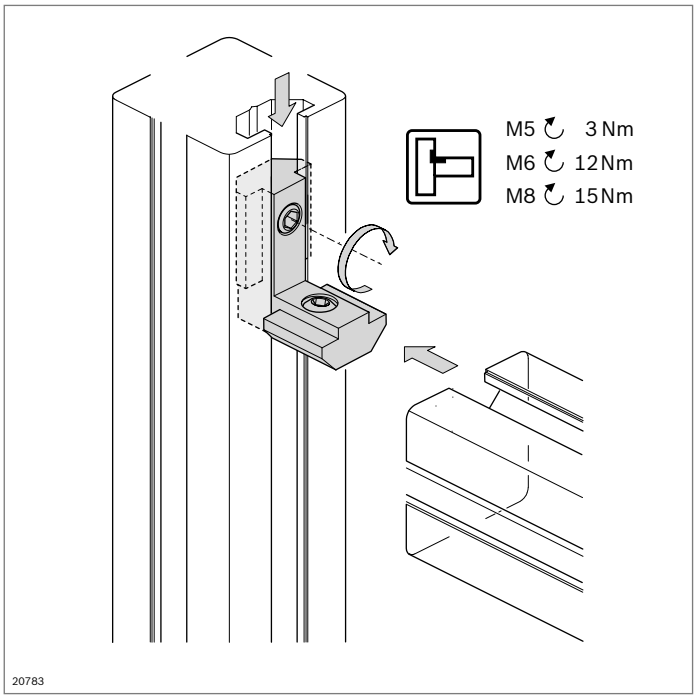

Inner bracket R

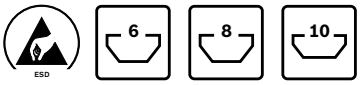

- For elegant, easy-to-assemble profile connections
- Especially suitable for constructing door frames, protective grilles, or partition walls
- Profile machining: not required

Technical data (p. 19-8)

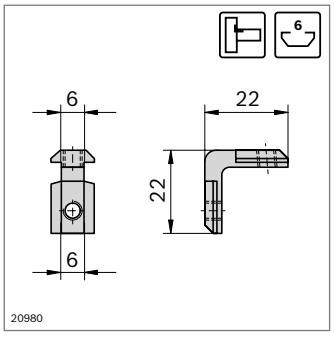

Slot	F_{max}	M_{max}
6 / 6	600 N	10 Nm

FS1
DIN 913
M5x5

Inner bracket R	Slot	ESD		No.	FS
	6 / 6		10	**3 842 535 575**	2xFS1

Material: Cast steel; galvanized
Fastening material: steel, galvanized
Scope of delivery: Incl. fastening material (FS)

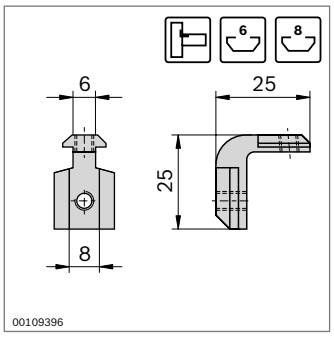

Slot	F_{max}	M_{max}
6 / 8	600 N	10 Nm

FS1
DIN 913
M5x5

Inner bracket R	Slot	ESD		No.	FS
	6 / 8		10	**3 842 535 573**	2xFS1

Material: Cast steel; galvanized
Fastening material: steel, galvanized
Scope of delivery: Incl. fastening material (FS)

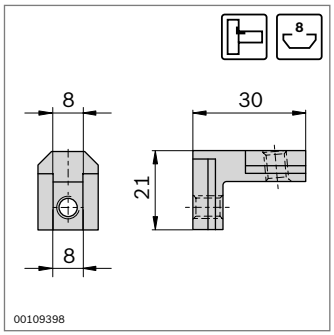

Slot	F_{max}	M_{max}
8 / 8	2500 N	50 Nm

FS2

DIN 913
M6x8

Inner bracket R	Slot	ESD		No.	FS
	8 / 8		10	**3 842 535 577**	2xFS2

Material: Cast steel; galvanized
Fastening material: steel, galvanized
Scope of delivery: Incl. fastening material (FS)

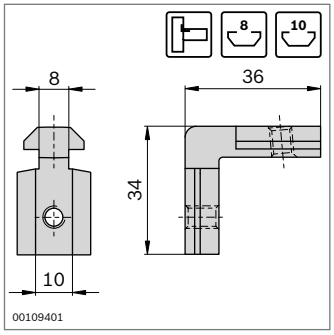

Slot	F_{max}	M_{max}
8 / 10	2500 N	50 Nm

FS2

DIN 913
M6x8

FS3

DIN 913
M6x12

Inner bracket R	Slot	ESD		No.	FS
	8 / 10		10	**3 842 535 576**	FS2, FS3

Material: Cast steel; galvanized
Fastening material: steel, galvanized
Scope of delivery: Incl. fastening material (FS)

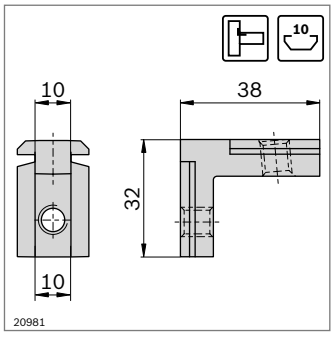

Slot	F_{max}	M_{max}
10 / 10	3000 N	100 Nm

FS4

DIN 913
M8x12

Inner bracket R	Slot	ESD		No.	FS
	10 / 10		10	**3 842 535 571**	2xFS4

Material: Cast steel; galvanized
Fastening material: steel, galvanized
Scope of delivery: Incl. fastening material (FS)

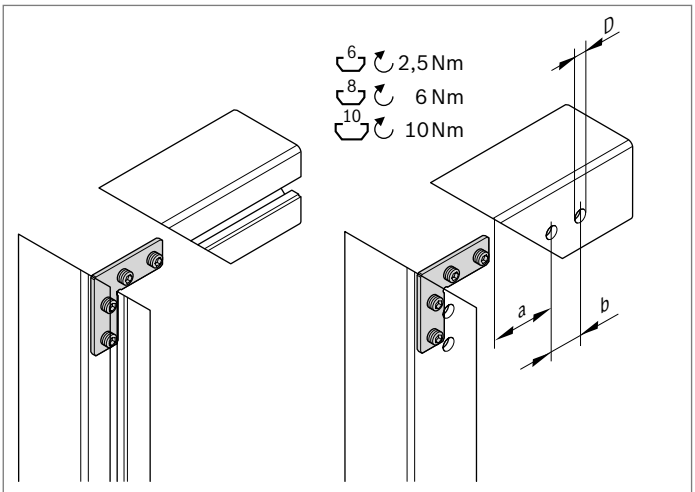

	a (mm)	**b** (mm)	**D** (mm)
20x20	24,4	20	4,5
30x30	26	20	8,5
45x45	37,5	25	10,5
50x50	40	25	10,5

00139159

Miter bracket

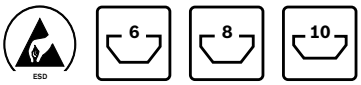

- For right-angled connections of miter-cut profiles
- Profile finishing with open profile slots: not required
- Profile finishing with closed profile slots: through-holes for screwdriver

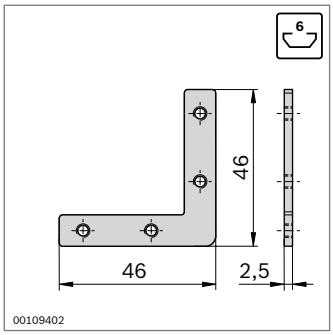

00109402

FS1

DIN 915
M4x5

Miter bracket	Slot	ESD		No.	FS
	6		20	**3 842 535 626**	4xFS1

Material: Steel, stainless
Fastening material: steel, galvanized
Scope of delivery: Incl. fastening material (FS)

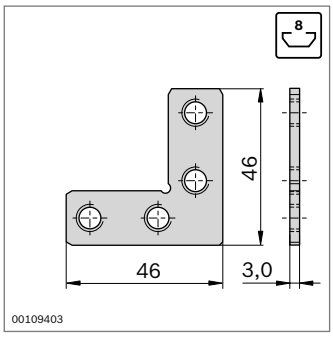

00109403

FS2

DIN 913
M8x8

Miter bracket	Slot	ESD		No.	FS
	8		20	**3 842 535 627**	4xFS2

Material: Steel, galvanized
Fastening material: steel, galvanized
Scope of delivery: Incl. fastening material (FS)

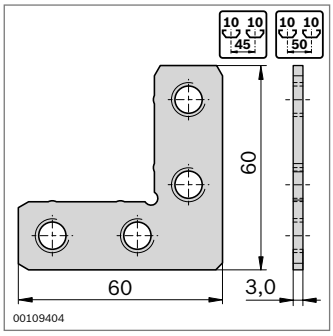

00109404

FS3

DIN 913
M10x10

Miter bracket	Slot	ESD		No.	FS
	10		20	**3 842 535 625**	4xFS3

Material: Steel, galvanized
Fastening material: steel, galvanized
Scope of delivery: Incl. fastening material (FS)

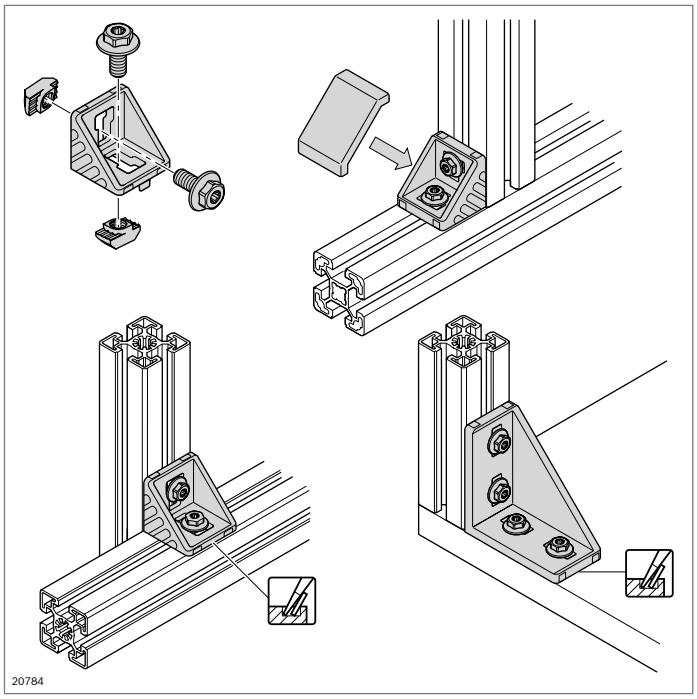

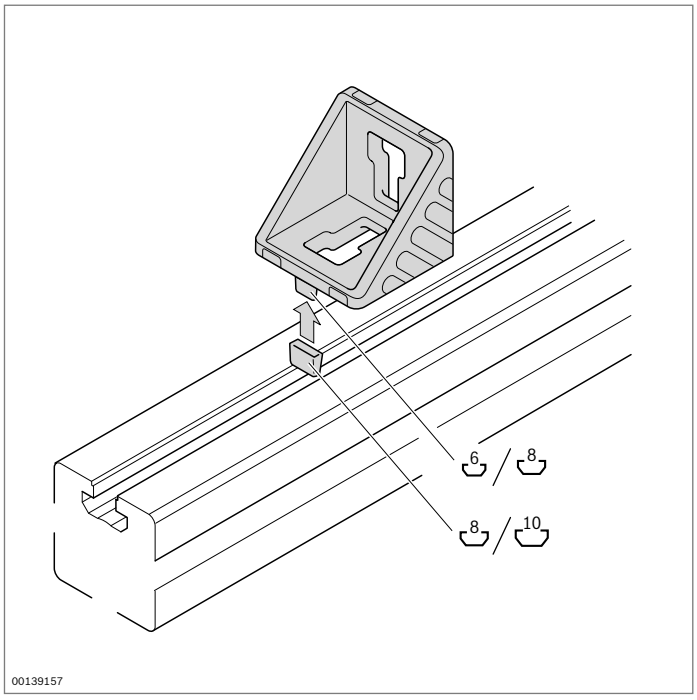

Bracket

designLINE

- Brackets with centering lugs for rapid, precise assembly with protection against turning
- Centering lugs can be easily broken off for assembly on plates or at right angles to the slot
- *designLINE* version with special silver paint (RAL 9006) for an attractive, high-quality design
- Intermediate element for positioning brackets in the next largest slot
- Offset sliding block for off-center positioning of the 45/45 bracket
- Cover cap to protect from dirt, available in signal gray (RAL 7004) and black ESD (RAL 9005)
- Profile machining: not required

Technical data (p. 19-9)

Notice: The collar screws enable the brackets to be assembled really quickly and easily (p. 3-5)

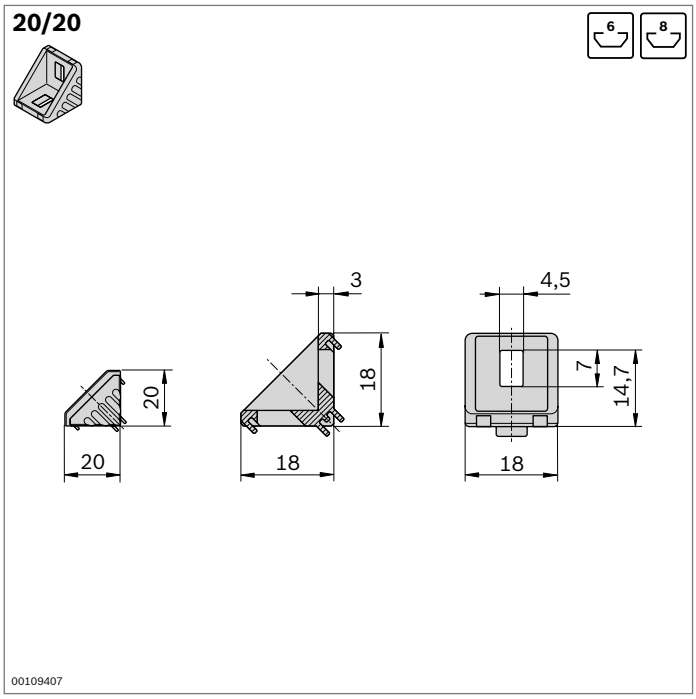

20/20	Slot	ESD		No.	FS
Set (standard)	6 / 6		1	**3 842 523 511**	2xFS1
designLINE set	6 / 6		1	**3 842 551 596**	2xFS1
Bracket (standard)	6		100	**3 842 523 508**	
Cap, signal gray			100	**3 842 548 842**	
Cap, black			100	**3 842 548 843**	
Adapter for 8 mm slot	6 / 8		100	**3 842 523 516**	

Material: Bracket: Diecast aluminum, vibratory ground
designLINE bracket: painted (RAL 9006)
Adapter: PA, black
Cap: PP
Fastening material: steel, galvanized

Scope of delivery: Set incl. fastening material (FS)

Model	F_{max}	M_{max}	M_{max}	M_{max}
20/20	700 N	6 Nm	25 Nm	–

FS1
DIN 7984
M4x8
6

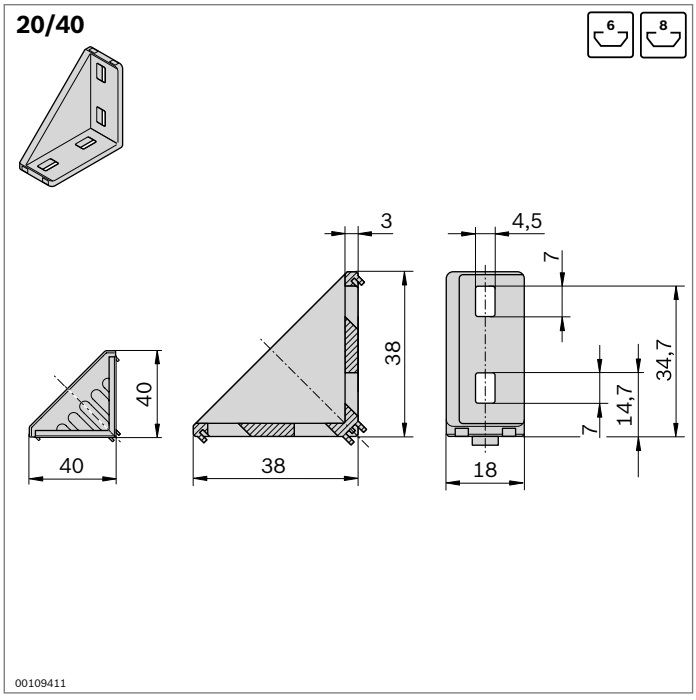

20/40	Slot	ESD		No.	FS
Set (standard)	6 / 6		1	**3 842 523 520**	4xFS1
designLINE set	6 / 6		1	**3 842 551 597**	4xFS1
Bracket (standard)	6		20	**3 842 523 517**	
Cap, signal gray			20	**3 842 548 844**	
Cap, black			20	**3 842 548 845**	
Adapter for 8 mm slot	6 / 8		100	**3 842 523 516**	

Material: Bracket: Diecast aluminum, vibratory ground
Bracket *designLINE*: painted (RAL 9006)
Adapter: PA; black
Cap: PP
Fastening material: steel, galvanized

Scope of delivery: Set incl. fastening material (FS)

Model	F_{max}	M_{max}	M_{max}	M_{max}
20/40	1400 N	15 Nm	50 Nm	8 Nm

FS1
DIN 7984
M4x8
6

20x28

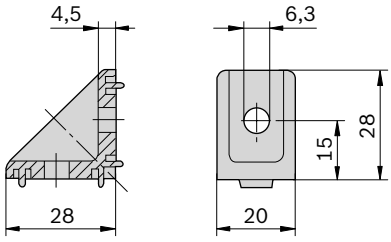

00125983

20x28	Slot	ESD		No.	FS
Set (standard)	8 / 8		1	**3 842 502 137**	2xFS1
Bracket (standard)	8		100	**3 842 501 587**	

Material: Diecast zinc
Fastening material: steel, galvanized
Scope of delivery: Set incl. fastening material (FS)

FS1

DIN 7984
M6x12

30/30

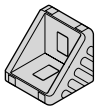

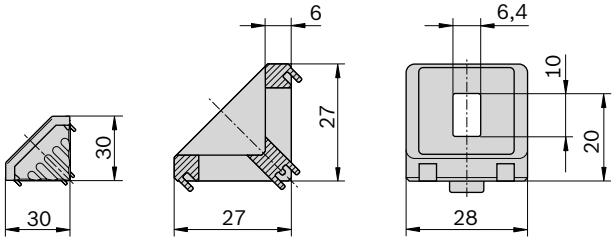

00109415

30/30	Slot	ESD		No.	FS
Set (standard)	8 / 8		1	**3 842 523 528**	2xFS2
	8 / 10		1	**3 842 523 530**	1xFS2, 2xFS3, 1xFS4
	10 / 10		1	**3 842 523 532**	4xFS3, 2xFS4
designLINE set	8 / 8		1	**3 842 551 598**	2xFS2
	8 / 10		1	**3 842 551 600**	1xFS2, 2xFS3, 1xFS4
	10 / 10		1	**3 842 551 599**	4xFS3, 2xFS4
Bracket (standard)	8		100	**3 842 523 525**	
Cap, signal gray			100	**3 842 548 846**	
Cap, black			100	**3 842 548 847**	
Adapter for 10 mm slot	8 / 10		100	**3 842 523 537**	

Material: Bracket: Diecast aluminum, vibratory ground
Bracket *designLINE*: painted (RAL 9006)
Adapter: PA, black
Cap: PP
Fastening material: steel, galvanized
Scope of delivery: Set incl. fastening material (FS)

Model	F_{max}	M_{max}	M_{max}	M_{max}
30/30	1250 N	25 Nm	75 Nm	–

FS2

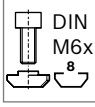

DIN 7984
M6x14

FS3

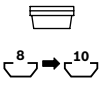

FS4

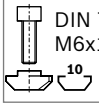

DIN 7984
M6x18

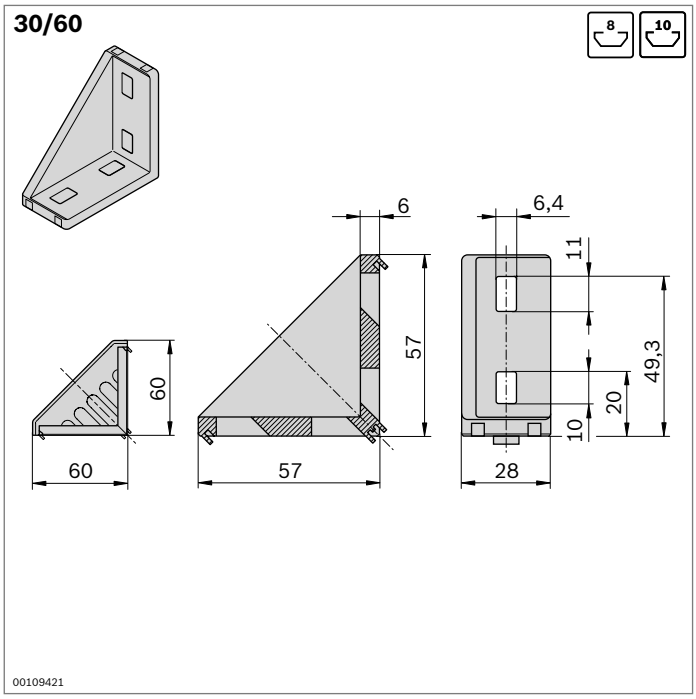

30/60	Slot	ESD		No.	FS
Set (standard)	8 / 8		1	**3 842 523 541**	4xFS2
designLINE set	8 / 8		1	**3 842 551 601**	4xFS2
Bracket (standard)	8		20	**3 842 523 538**	
Cap, signal gray			20	**3 842 548 848**	
Cap, black			20	**3 842 548 849**	
Adapter for 10 mm slot	8 / 10		100	**3 842 523 537**	

Material: Bracket: Diecast aluminum, vibratory ground
Bracket *designLINE*: painted (RAL 9006)
Adapter: PA, black
Cap: PP
Fastening material: steel, galvanized

Scope of delivery: Set incl. fastening material (FS)

Model	F_{max}	M_{max}	M_{max}	M_{max}
30/60	2500 N	100 Nm	170 Nm	25 Nm

FS2

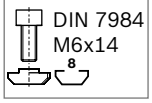

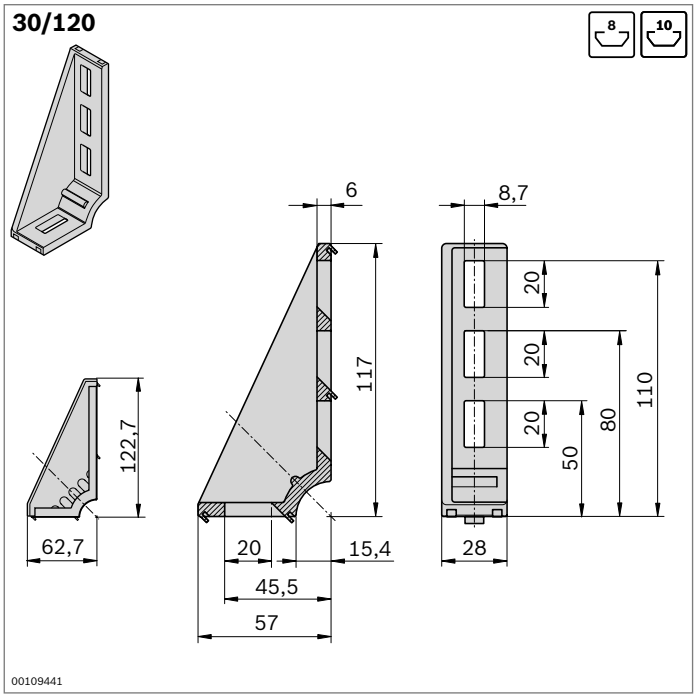

30/120	Slot	ESD		No.	FS
designLINE set	8 / 8		1	**3 842 551 602**	2xFS6
Bracket (standard)	8		20	**3 842 523 587**	
Cap, signal gray			20	**3 842 548 850**	
Cap, black			20	**3 842 548 851**	
Adapter for 10 mm slot	8 / 10		100	**3 842 523 537**	

Material: Bracket: Diecast aluminum, vibratory ground
Bracket *designLINE*: painted (RAL 9006)
Adapter: PA, black
Cap: PP
Fastening material: steel, galvanized

Scope of delivery: Set incl. fastening material (FS)

Model	F_{max}	M_{max}	M_{max}
30/120	3750 N	100 Nm	47 Nm

FS6

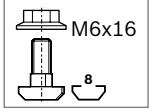

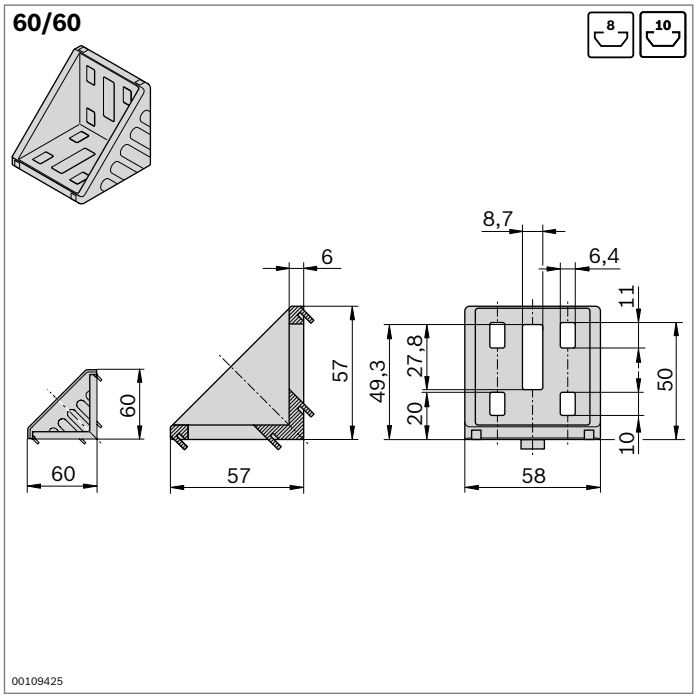

60/60	Slot	ESD		No.	FS
Set (standard)	8 / 8		1	**3 842 523 549**	8xFS2
	8 / 10		1	**3 842 523 551**	4xFS2, 1xFS5
	10 / 10		1	**3 842 523 553**	2xFS5
designLINE set	8 / 8		1	**3 842 551 609**	8xFS2
	8 / 10		1	**3 842 551 610**	4xFS2, 1xFS5
	10 / 10		1	**3 842 551 611**	2xFS5
Bracket (standard)	8		20	**3 842 523 546**	
Cap, signal gray			20	**3 842 548 852**	
Cap, black			20	**3 842 548 853**	
Adapter for 10 mm slot	10		100	**3 842 523 537**	

Material: Bracket: Diecast aluminum, vibratory ground
Bracket *designLINE*: painted (RAL 9006)
Adapter: PA; black
Cap: PP
Fastening material: steel, galvanized

Scope of delivery: Set incl. fastening material (FS)

Model	Slot	F_{max}	M_{max}	M_{max}	M_{max}
60/60	8	5000 N	320 Nm	370 Nm	110 Nm
	10	3000 N	125 Nm	150 Nm	–

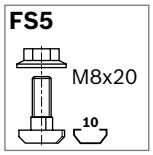

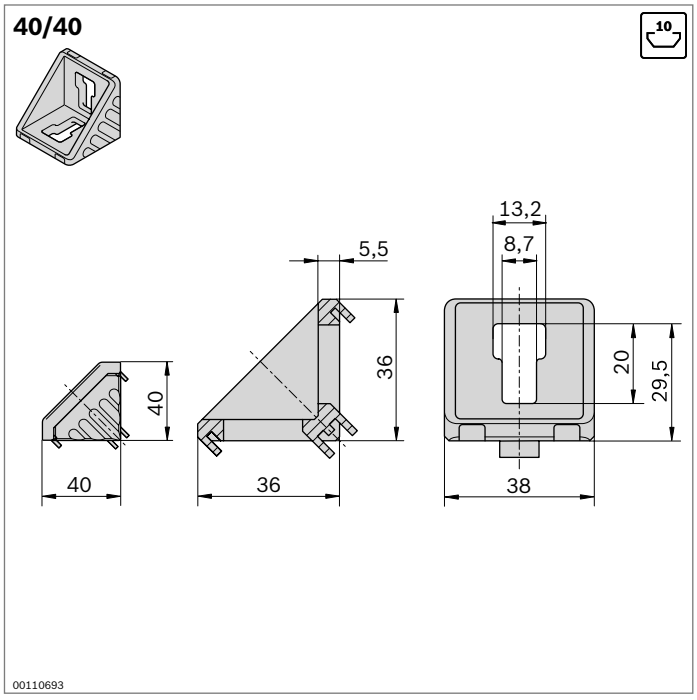

40/40	Slot	ESD		No.	FS
Set (standard)	10 / 10		1	**3 842 529 383**	2xFS5
designLINE set	10 / 10		1	**3 842 551 603**	2xFS5
Bracket (standard)	10		100	**3 842 528 967**	
Cap, signal gray			100	**3 842 548 854**	
Cap, black			100	**3 842 548 855**	

Material: Bracket: Diecast aluminum, vibratory ground
Bracket *designLINE*: painted (RAL 9006)
Cap: PP
Fastening material: steel, galvanized

Scope of delivery: Set incl. fastening material (FS)

Model	F_{max}	M_{max}	M_{max}	M_{max}
40/40	3000 N	55 Nm	145 Nm	35 Nm

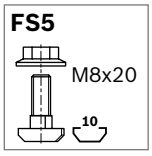

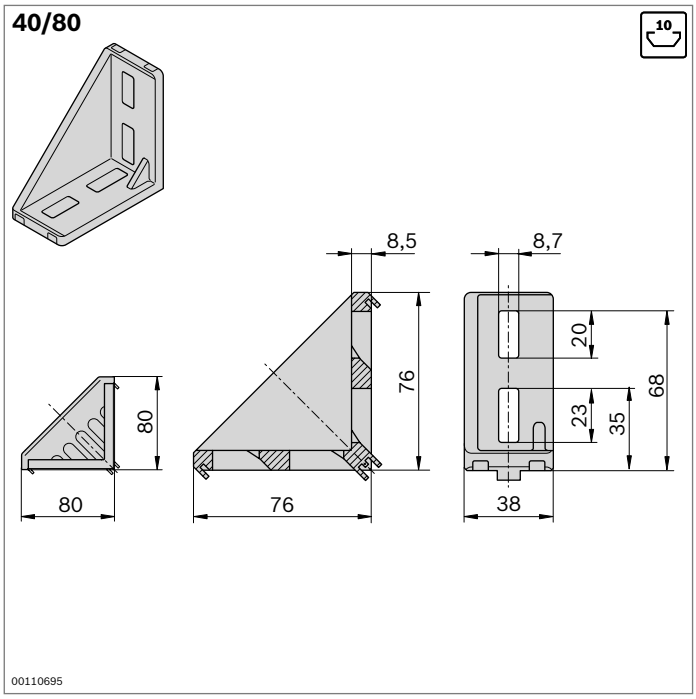

40/80	Slot	ESD		No.	FS
Set (standard)	10 / 10		1	**3 842 529 386**	4xFS7
designLINE set	10 / 10		1	**3 842 551 604**	4xFS7
Bracket (standard)	10		20	**3 842 529 005**	
Cap, signal gray			20	**3 842 548 856**	
Cap, black			20	**3 842 548 857**	

Material: Bracket: Diecast aluminum, vibratory ground
designLINE bracket: painted (RAL 9006)
Cap: PP
Fastening material: steel, galvanized

Scope of delivery: Set incl. fastening material (FS)

Model	F_{max}	M_{max}	M_{max}	M_{max}
40/80	6000 N	180 Nm	400 Nm	60 Nm

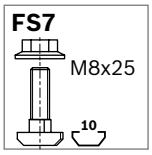

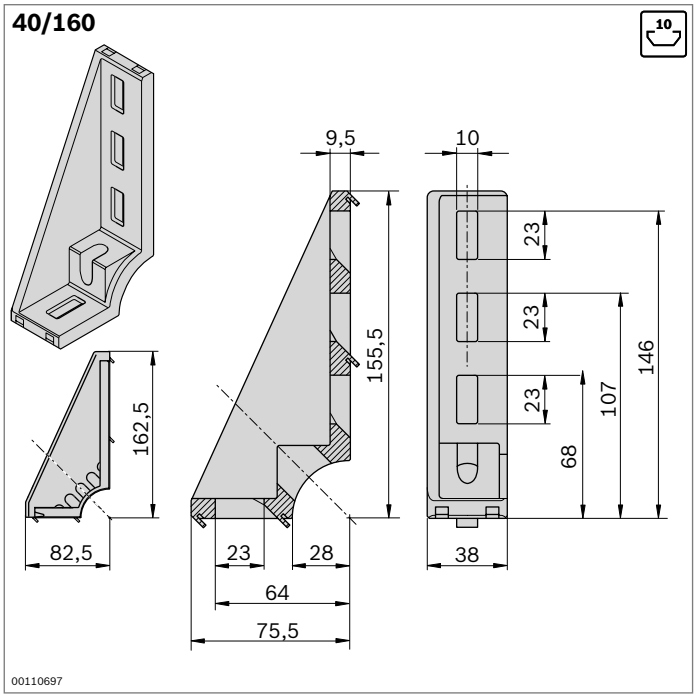

40/160	Slot	ESD		No.	FS
designLINE set	10 / 10		1	**3 842 551 605**	2xFS7
Bracket (standard)	10		20	**3 842 529 006**	
Cap, signal gray			20	**3 842 548 858**	
Cap, black			20	**3 842 548 859**	

Material: Bracket: Diecast aluminum, vibratory ground
Bracket *designLINE*: painted (RAL 9006)
Cap: PP
Fastening material: steel, galvanized

Scope of delivery: Set incl. fastening material (FS)

Model	F_{max}	M_{max}	M_{max}
40/160	9000 N	250 Nm	60 Nm

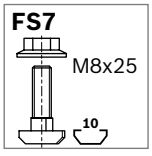

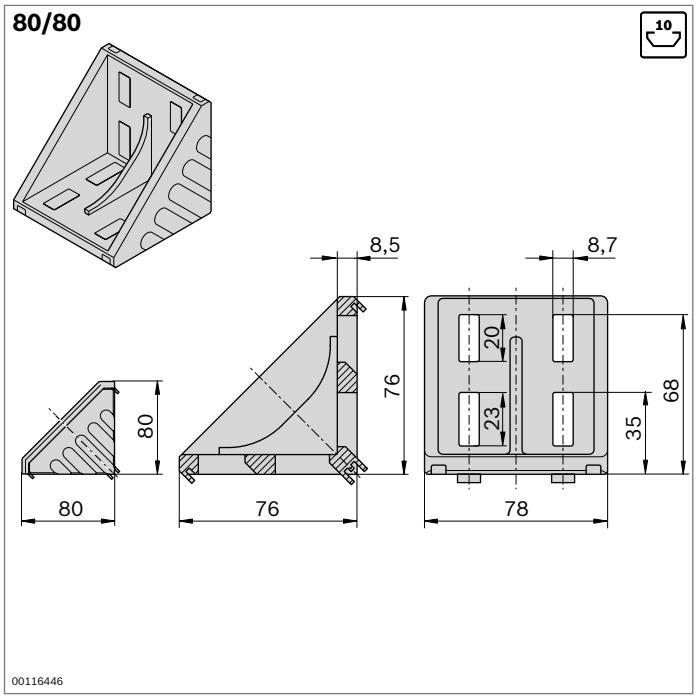

80/80	Slot	ESD		No.	FS
Set (standard)	10 / 10		1	**3 842 530 360**	8xFS7
designLINE set	10 / 10		1	**3 842 551 612**	8xFS7
Bracket (standard)	10		20	**3 842 530 231**	
Cap, signal gray			20	**3 842 548 860**	
Cap, black			20	**3 842 548 861**	

Material: Bracket: Diecast aluminum, vibratory ground
Bracket *designLINE*: painted (RAL 9006)
Cap: PP
Fastening material: steel, galvanized

Scope of delivery: Set incl. fastening material (FS)

Model	F_{max}	M_{max}	M_{max}	M_{max}
80/80	14000 N	500 Nm	1000 Nm	400 Nm

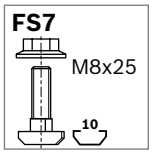

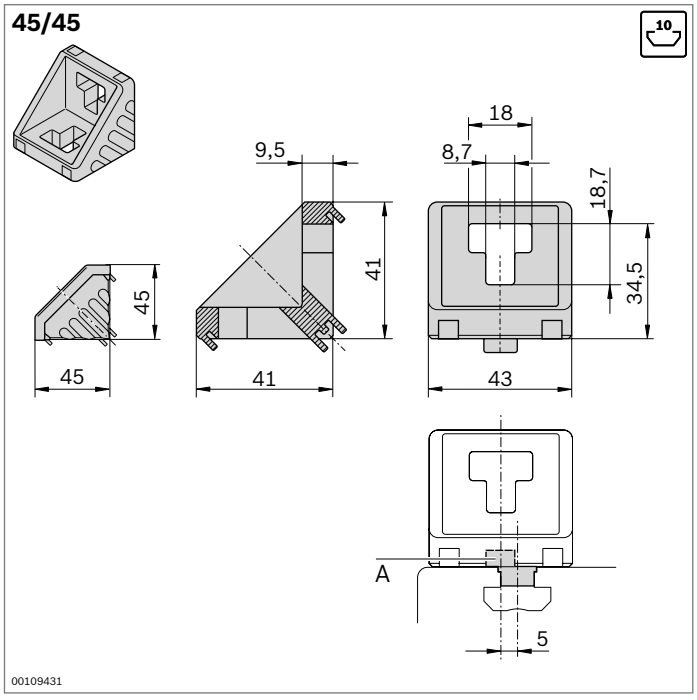

45/45	Slot	ESD		No.	FS
Set (standard)	10 / 10		1	**3 842 523 561**	2xFS7
designLINE set	10 / 10		1	**3 842 551 606**	2xFS7
Bracket (standard)	10		100	**3 842 523 558**	
Cap, signal gray			100	**3 842 548 862**	
Cover cap, black			100	**3 842 548 863**	
Sliding block, offset (**A**)	10		100	**3 842 523 593**	

Material: Bracket: Diecast aluminum, vibratory ground
Bracket *designLINE*: painted (RAL 9006)
Sliding block, offset: PA, black
Cap: PP
Fastening material: steel, galvanized

Scope of delivery: Set incl. fastening material (FS)

Model	F_{max}	M_{max}	M_{max}	M_{max}
45/45	3000 N	60 Nm	160 Nm	–

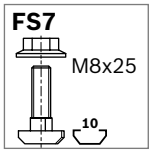

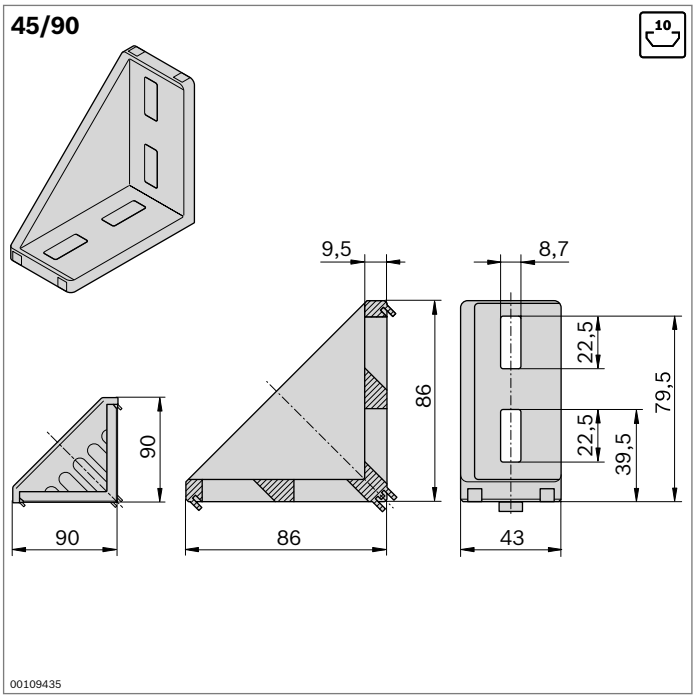

45/90	Slot	ESD		No.	FS
Set (standard)	10 / 10		1	**3 842 523 570**	4xFS7
designLINE set	10 / 10		1	**3 842 551 607**	4xFS7
Bracket (standard)	10		100	**3 842 523 567**	
Cap, signal gray			100	**3 842 548 864**	
Cap, black			100	**3 842 548 865**	

Material: Bracket: Diecast aluminum, vibratory ground
designLINE bracket: painted (RAL 9006)
Cap: PP
Fastening material: steel, galvanized

Scope of delivery: Set incl. fastening material (FS)

Model	F_{max}	M_{max}	M_{max}	M_{max}
45/90	6000 N	180 Nm	400 Nm	60 Nm

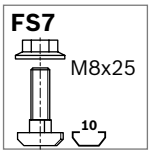

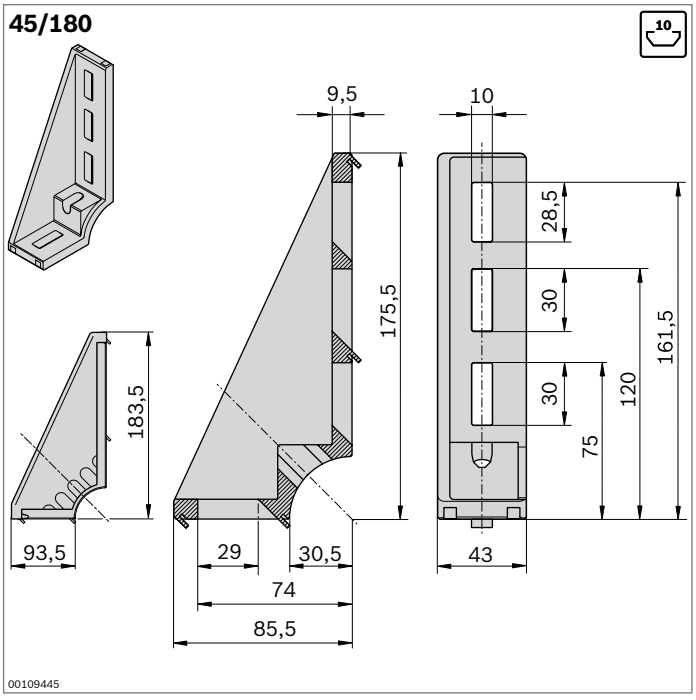

45/180	Slot	ESD		No.	FS
designLINE set	10 / 10		1	**3 842 551 608**	2xFS7
Bracket (standard)	10		20	**3 842 523 583**	
Cap, signal gray			20	**3 842 548 866**	
Cap, black			20	**3 842 548 867**	

Material: Bracket: Diecast aluminum, vibratory ground
Bracket *designLINE*: painted (RAL 9006)
Cap: PP
Fastening material: steel, galvanized

Scope of delivery: Set incl. fastening material (FS)

Model	F_{max}	M_{max}	M_{max}
45/180	9000 N	250 Nm	65 Nm

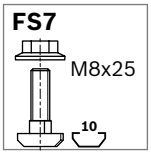

90/90

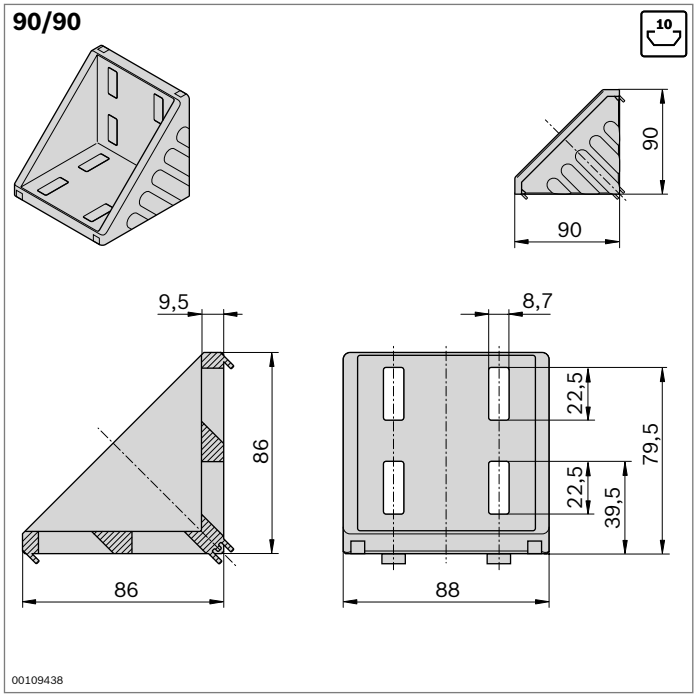

90/90	Slot	ESD		No.	FS
Set (standard)	10 / 10		1	**3 842 523 578**	8xFS7
designLINE set	10 / 10		1	**3 842 551 613**	8xFS7
Bracket (standard)	10		20	**3 842 523 575**	
Cap, signal gray			20	**3 842 548 868**	
Cap, black			20	**3 842 548 869**	

Material: Bracket: Diecast aluminum, vibratory ground
designLINE bracket: painted (RAL 9006)
Cap: PP
Fastening material: steel, galvanized

Scope of delivery: Set incl. fastening material (FS)

Model	F_{max}	M_{max}	M_{max}	M_{max}
90/90	12000 N	370 Nm	800 Nm	200 Nm

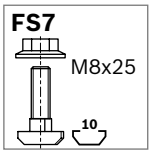

43x42

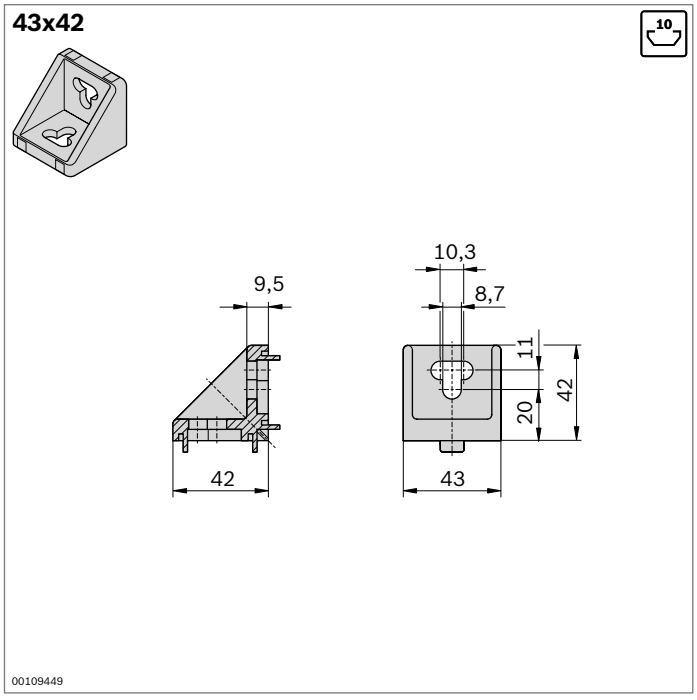

43x42	Slot	ESD		No.	FS
Set (standard)	10 / 10		1	**3 842 352 009**	2xFS7
Bracket (standard)	10		100	**3 842 348 526**	

Material: Bracket: Die-cast aluminum
Fastening material: steel, galvanized

Scope of delivery: Set incl. fastening material (FS)

Model	F_{max}	M_{max}	M_{max}	M_{max}
43x42	2000 N	–	160 Nm	–

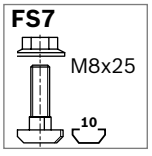

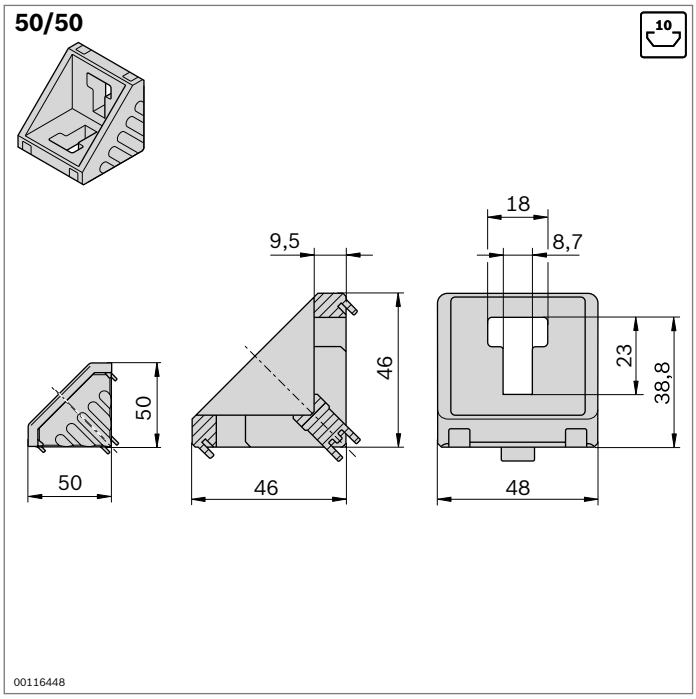

50/50	Slot	ESD		No.	FS
Set (standard)	10 / 10		1	**3 842 530 259**	2xFS7
Bracket (standard)	10		20	**3 842 530 381**	
Cap, signal gray			20	**3 842 548 870**	
Cap, black			20	**3 842 548 871**	

Material: Bracket: Diecast aluminum, vibratory ground
Cover cap: PP
Fastening material: steel, galvanized

Scope of delivery: Set incl. fastening material (FS)

Model	F_{max}	M_{max}	M_{max}	M_{max}
50/50	4000 N	125 Nm	250 Nm	38 Nm

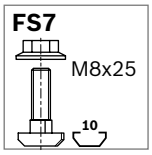

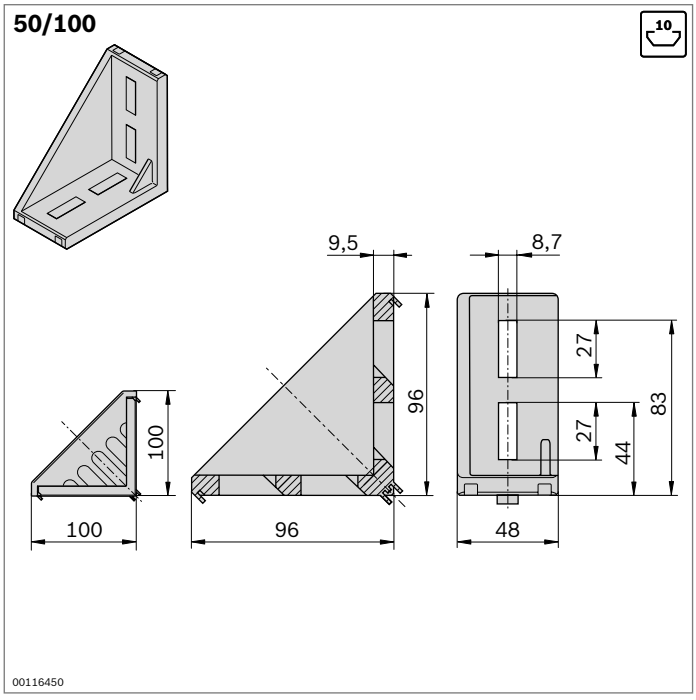

50/100	Slot	ESD		No.	FS
Set (standard)	10 / 10		1	**3 842 530 260**	4xFS7
Bracket (standard)	10		20	**3 842 530 382**	
Cap, signal gray			20	**3 842 548 872**	
Cap, black			20	**3 842 548 873**	

Material: Bracket: Diecast aluminum, vibratory ground
Cap: PP
Fastening material: steel, galvanized

Scope of delivery: Set incl. fastening material (FS)

Model	F_{max}	M_{max}	M_{max}	M_{max}
50/100	7500 N	300 Nm	600 Nm	73 Nm

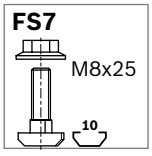

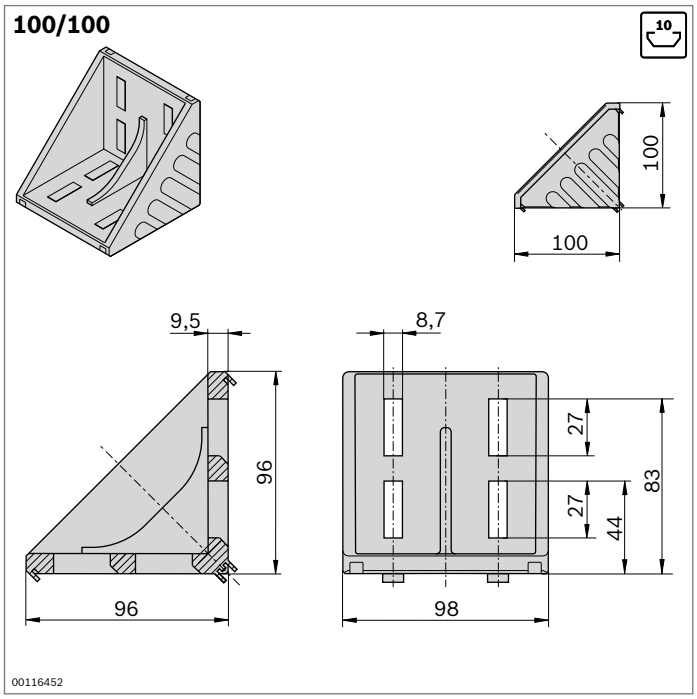

100/100	Slot	ESD		No.	FS
Set (standard)	10 / 10		1	**3 842 530 361**	8xFS7
Bracket (standard)	10		20	**3 842 530 460**	
Cap, signal gray			20	**3 842 548 874**	
Cap, black			20	**3 842 548 875**	

Material: Bracket: Diecast aluminum, vibratory ground
Cap: PP
Fastening material: steel, galvanized

Scope of delivery: Set incl. fastening material (FS)

Model	Fmax	Mmax	Mmax	Mmax
100/100	15000 N	550 Nm	1100 Nm	480 Nm

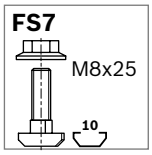

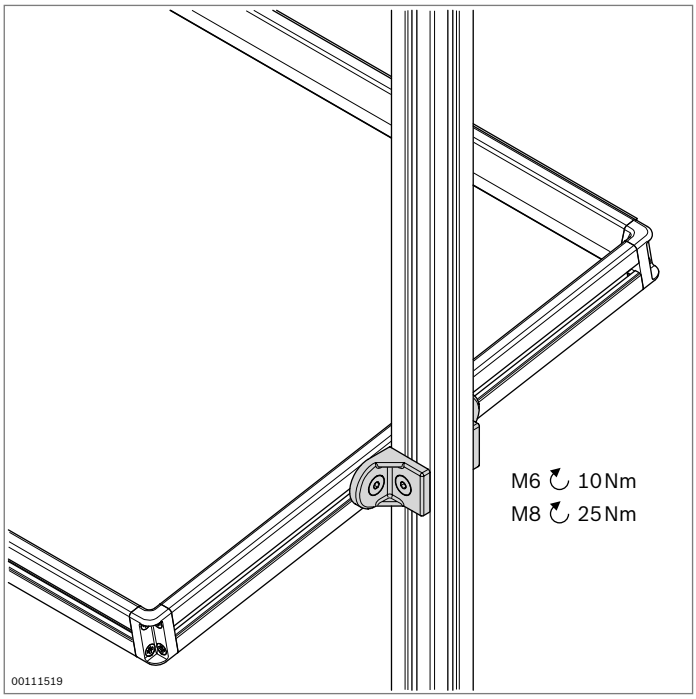

Bracket R

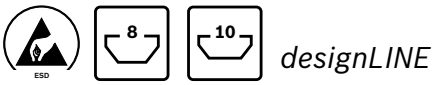

designLINE

- For connecting profiles at any angle
- No interfering edges thanks to rounded bracket
- Brackets with centering lugs for rapid, precise assembly with protection against turning
- Centering lugs can be easily broken off for assembly on plates or at right angles to the slot
- *designLINE* version with special silver paint (RAL 9006) for an attractive, high-quality design
- Profile machining: not required

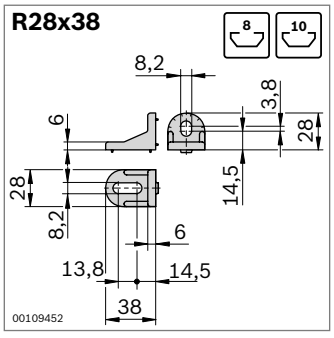

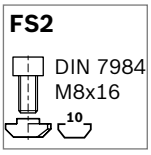

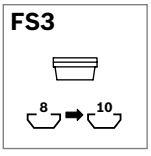

R28x38	Slot	ESD		No.	FS
Set (standard)	8 / 10		1	**3 842 515 547**	FS1, FS2, 2xFS3
	10 / 10		1	**3 842 521 580**	2xFS2, 4xFS3
designLINE set	8 / 10		1	**3 842 538 703**	FS1, FS2, 2xFS3
	10 / 10		1	**3 842 538 704**	2xFS2, 4xFS3
Bracket (standard)	8, 10		100	**3 842 515 473**	

Material: Bracket: Diecast zinc
designLINE bracket: painted (RAL 9006)
Adapter: PA; black
Fastening material: steel, galvanized

Scope of delivery: Set incl. fastening material (FS)

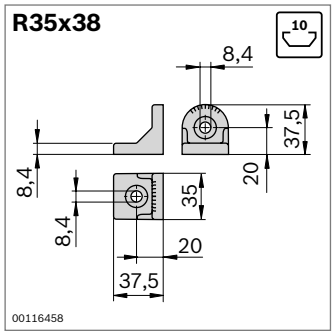

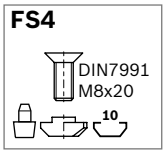

R35x38	Slot	ESD		No.	FS
Set (standard)	10 / 10		1	**3 842 532 274**	2xFS4
designLINE set	10 / 10		1	**3 842 538 705**	2xFS4
Bracket (standard)	10		100	**3 842 529 020**	

Material: Bracket: Die-cast aluminum
Bracket *designLINE*: painted (RAL 9006)
Centering bolts: PA6, black
Fastening material: steel, galvanized

Scope of delivery: Set incl. fastening material (FS)

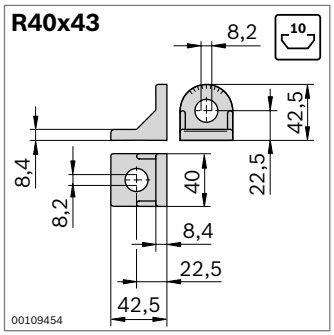

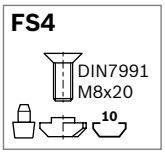

R40x43	Slot	ESD		No.	FS
Set (standard)	10 / 10		1	**3 842 518 424**	2xFS4
designLINE set	10 / 10		1	**3 842 538 706**	2xFS4
Bracket (standard)	10		100	**3 842 504 760**	

Material: Bracket: Diecast zinc
designLINE bracket: painted (RAL 9006)
Centering bolts: PA6, black
Fastening material: steel, galvanized

Scope of delivery: Set incl. fastening material (FS)

3

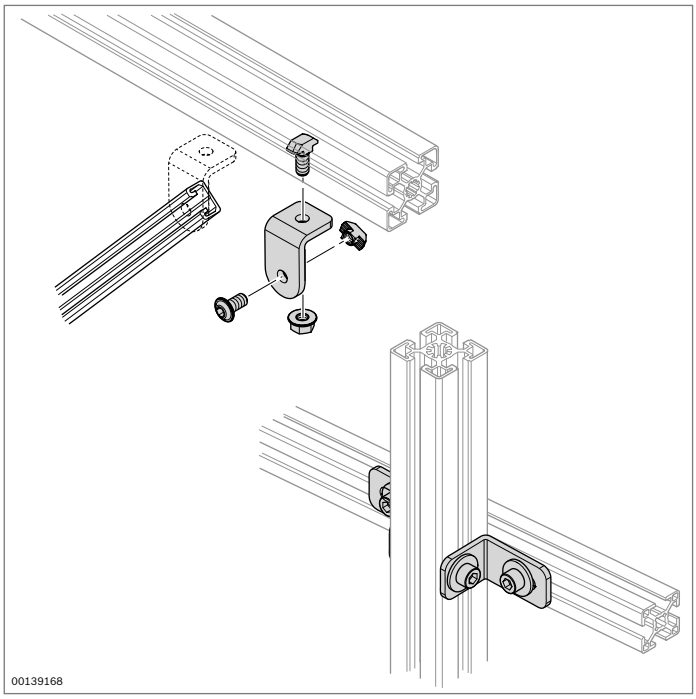

Steel bracket

- Steel bracket without centering lugs for fastening at any angle
- Profile machining: not required

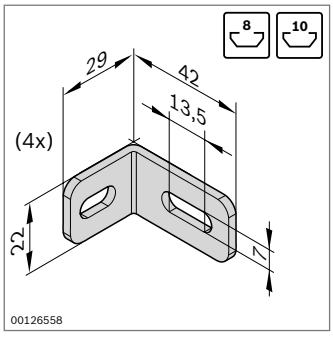

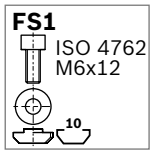

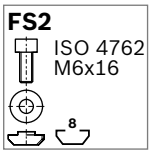

Bracket set	Slot	ESD		No.	FS
	8 / 10		4	**3 842 537 862**	4xFS1, 4xFS2

Material: Steel, galvanized
Fastening material: steel, galvanized
Scope of delivery: Set incl. fastening material (FS)

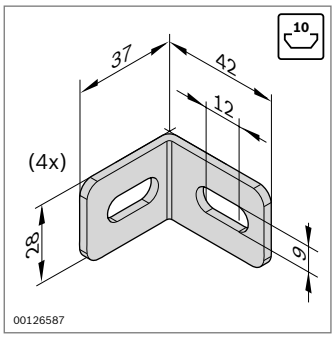

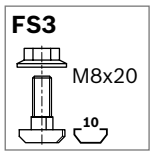

Bracket set	Slot	ESD		No.	FS
	10 / 10		4	**3 842 537 861**	8xFS3

Material: Steel, galvanized
Fastening material: steel, galvanized
Scope of delivery: Set incl. fastening material (FS)

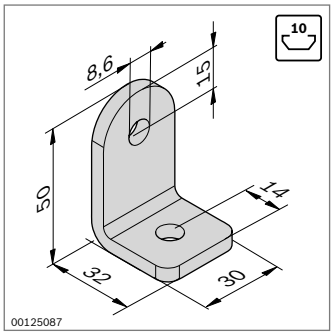

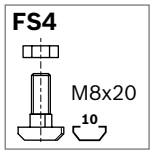

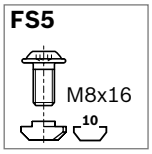

Bracket set	Slot	ESD		No.	FS
	10 / 10		20	**3 842 536 729**	FS4, FS5

Material: Steel, galvanized
Fastening material: steel, galvanized
Scope of delivery: Set incl. fastening material (FS)

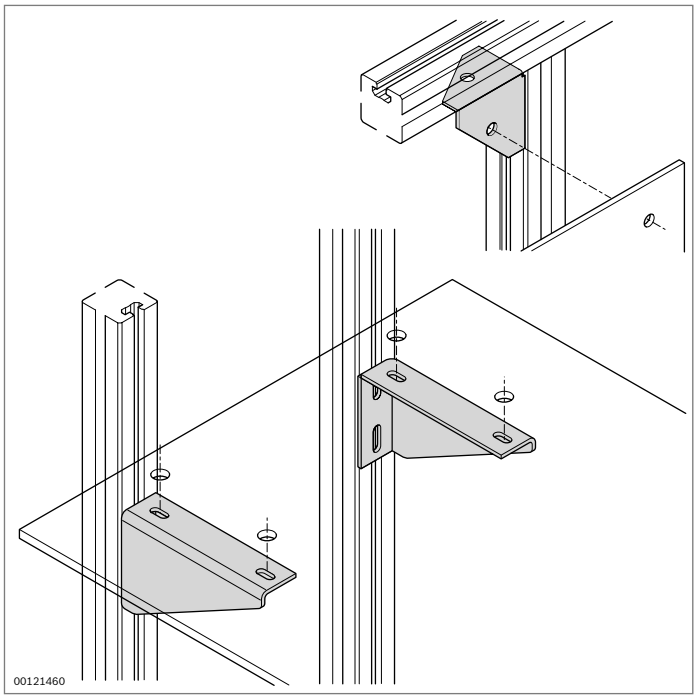

Metal bracket
Supporting bracket

Metal bracket

- Metal bracket for right-angled profile connections
- Screw fitting of surface elements in the stiffening fin bore
- Profile machining: not required

Supporting bracket

- Supporting bracket for fastening surface elements to profiles, e.g. for shelves
- Profile machining: not required

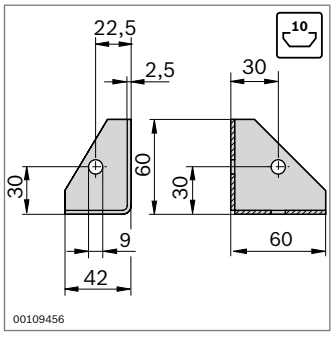

Metal bracket	ESD		No.
		20	**3 842 146 813**

Material: Sheet steel; galvanized

Accessories, required:

- T-bolt M8x20, 10 mm slot, **3 842 528 715** (p. 3-6)
- Flange nut M8, **3 842 345 081** (p. 3-6)

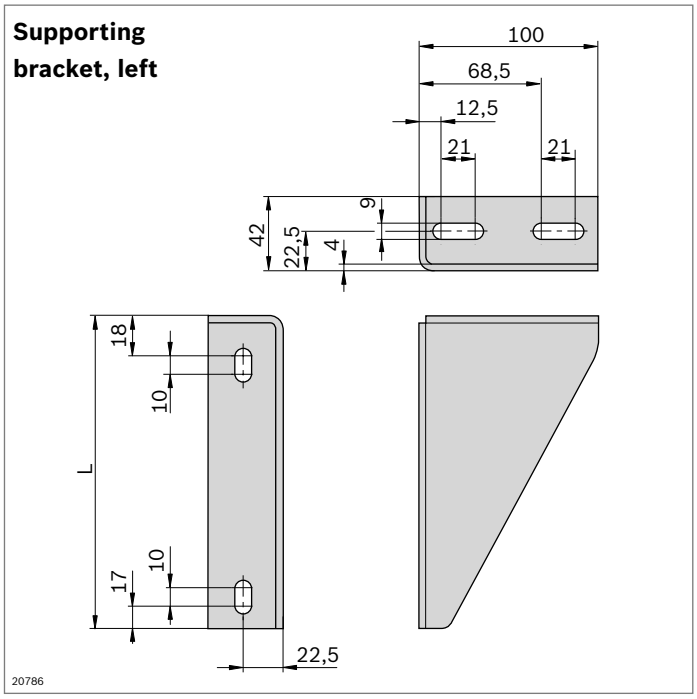

Supporting bracket	L (mm)	ESD	No.	FS
left 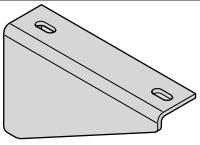	255		**3 842 536 119**	2xFS1
	335		**3 842 536 121**	2xFS1
	415		**3 842 536 123**	2xFS1
	495		**3 842 536 125**	2xFS1
right 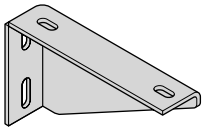	255		**3 842 536 120**	2xFS1
	335		**3 842 536 122**	2xFS1
	415		**3 842 536 124**	2xFS1
	495		**3 842 536 126**	2xFS1

Material: Sheet steel; powder-coated, RAL 7037
Fastening material: steel, galvanized

Scope of delivery: Incl. fastening material (FS)

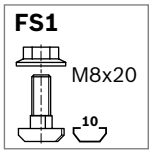

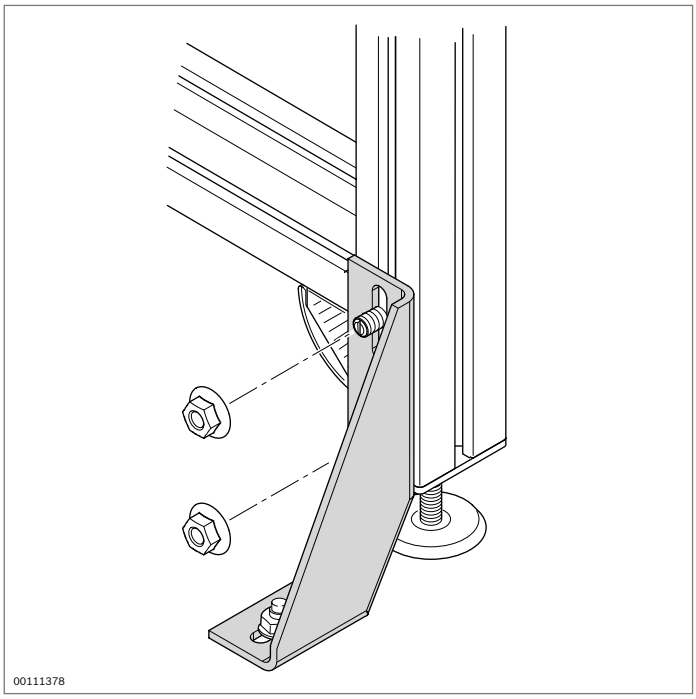

Foundation bracket

- Foundation bracket for securing frames to the floor
- The hole for the floor dowel can be bored without removing the foundation bracket
- Profile machining: not required

Accessories, required:

- T-bolt M8x20, 10 mm slot, **3 842 528 715** (p. 3-6)
- Flange nut M8, **3 842 345 081** (p. 3-6)
- Floor dowel

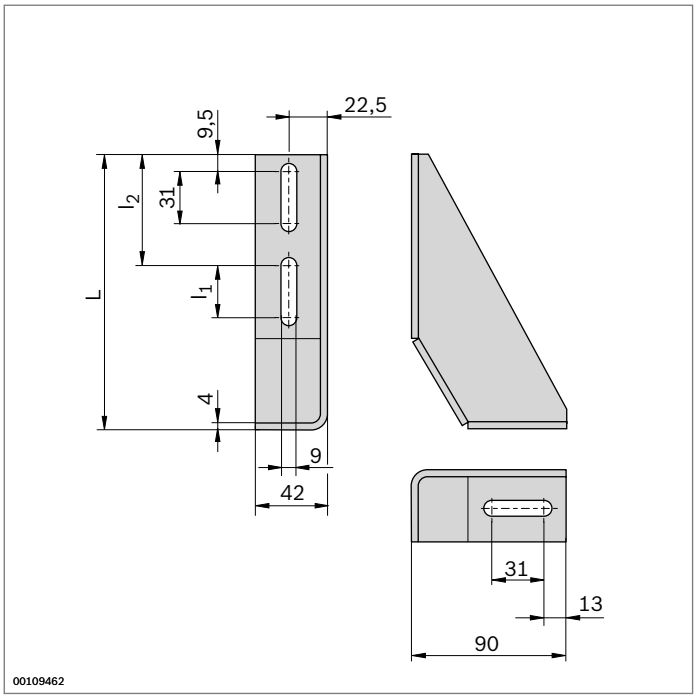

Foundation bracket	L (mm)	l_1 (mm)	l_2 (mm)		No.
	160	31	64.5	20	**3 842 146 815**
	210	91	54.5	20	**3 842 146 848**

Material: Sheet steel; galvanized

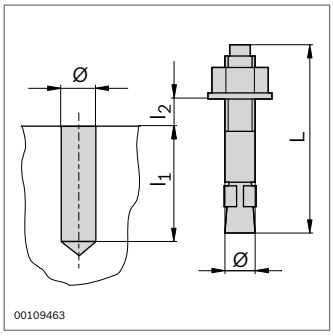

Floor dowel	ø	L (mm)	l_1 (mm)	$l_{2\,max}$ (mm)		No.
	8	80	65	15	100	**3 842 526 560**

Material: Steel, galvanized

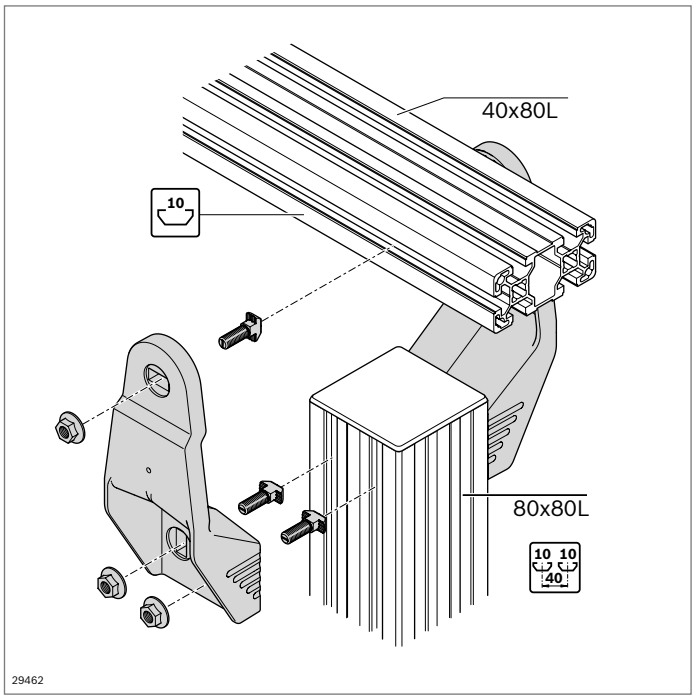

Holder AL

- For connecting profiles at right-angles to each other and with defined spacing, e.g. for floor supports made of 80x80L or 60x60 profiles
- Longitudinal connection possible in all profiles with 10 mm slot
- Transverse connection possible with 40 mm slot spacing
- Profile machining: not required

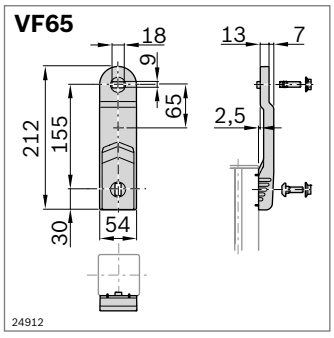

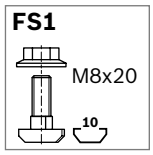

Holder	b (mm)	A (mm)		No.	FS
VF*plus* 65	65	2.5	Set	**3 842 546 625**	8xFS1

Material: Holder: diecast aluminum; silver fastening material: steel, galvanized

Scope of delivery: 2 x holder, fastening material (FS)

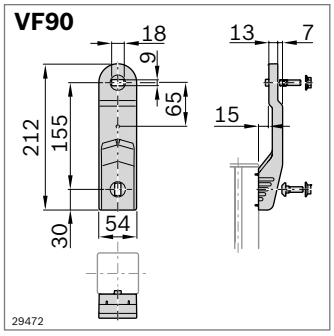

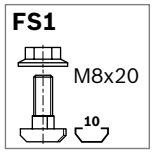

Holder	b (mm)	A (mm)		No.	FS
VF*plus* 90	90	15	Set	**3 842 546 626**	8xFS1

Material: Holder: diecast aluminum; silver
Fastening material: steel, galvanized

Scope of delivery: 2 x holder, fastening material (FS)

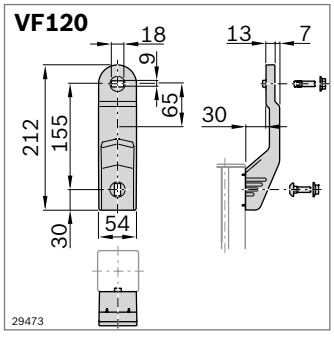

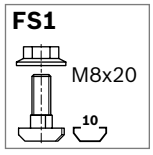

Holder	b (mm)	A (mm)		No.	FS
VF*plus* 120	120	30	Set	**3 842 546 627**	8xFS1

Material: Holder: diecast aluminum, silver
Fastening material: steel, galvanized

Scope of delivery: 2 x holder, fastening material (FS)

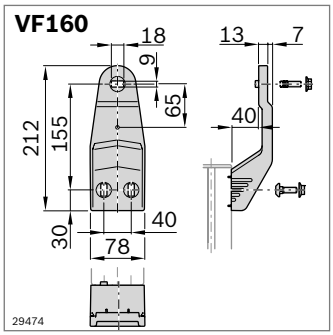

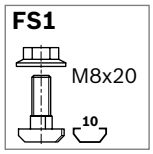

Holder	b (mm)	A (mm)		No.	FS
VF*plus* 160	160	40	Set	**3 842 546 628**	8xFS1

Material: Holder: diecast aluminum, silver
Fastening material: steel, galvanized
Scope of delivery: 2 x holder, fastening material (FS)

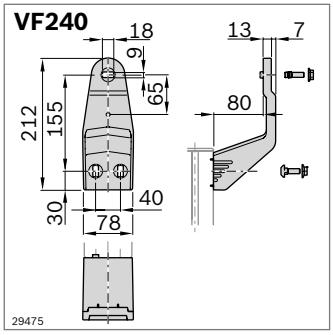

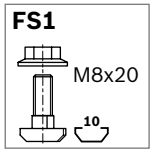

Holder	b (mm)	A (mm)		No.	FS
VF*plus* 240	240	80	Set	**3 842 546 629**	8xFS1

Material: Holder: diecast aluminum, silver
Fastening material: steel, galvanized
Scope of delivery: 2 x holder, fastening material (FS)

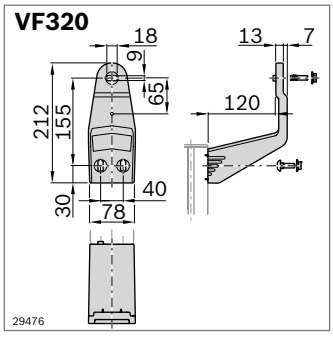

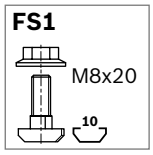

Holder	b (mm)	A (mm)		No.	FS
VF*plus* 320	320	120	Set	**3 842 546 630**	8xFS1

Material: Holder: diecast aluminum, silver
Fastening material: steel, galvanized
Scope of delivery: 2 x holder, fastening material (FS)

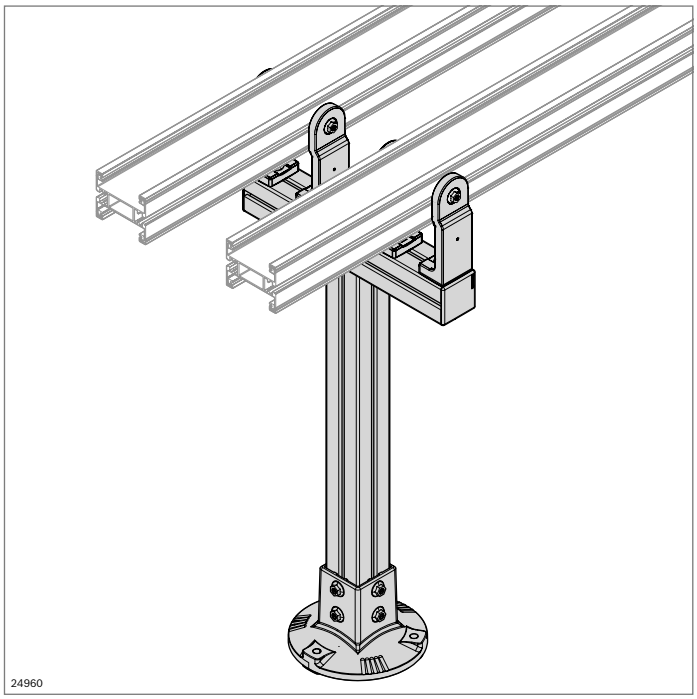

Supporting bracket AL

- Supporting bracket for connecting two profiles with defined spacing (approx. 2–3 m)
- Profile machining: not required
- Centering lugs make centering the supporting brackets in the slot easy
- If the centering lugs are removed, the supporting bracket can also be used for upward and downward sloping sections (up to approx. 45° depending on the return chain)
- Very easy to assemble due to push-in screwed connection
- Easy-clean design with self-draining surfaces

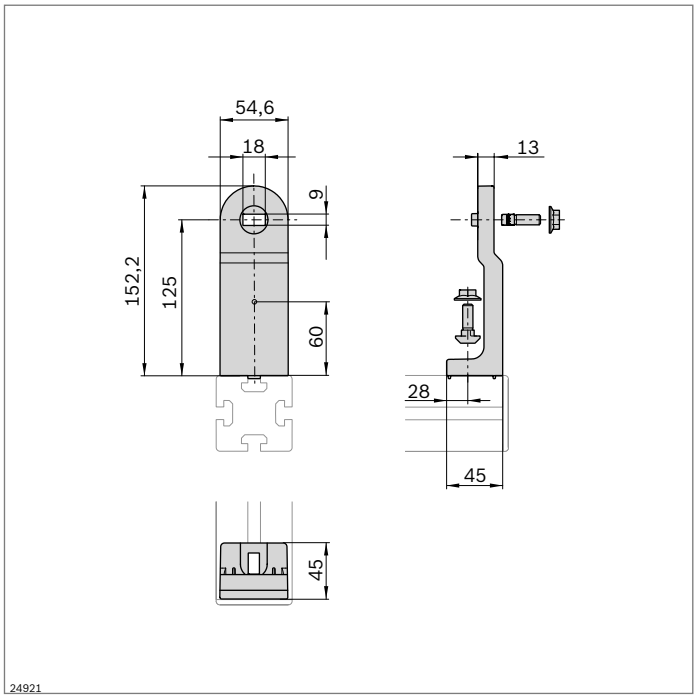

Supporting bracket VF*plus* AL		No.	FS
	Set	**3 842 546 632**	6xFS1

Material: Holder: diecast aluminum, silver
Fastening material: steel, galvanized

Scope of delivery: Incl. fastening material (FS)

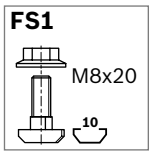

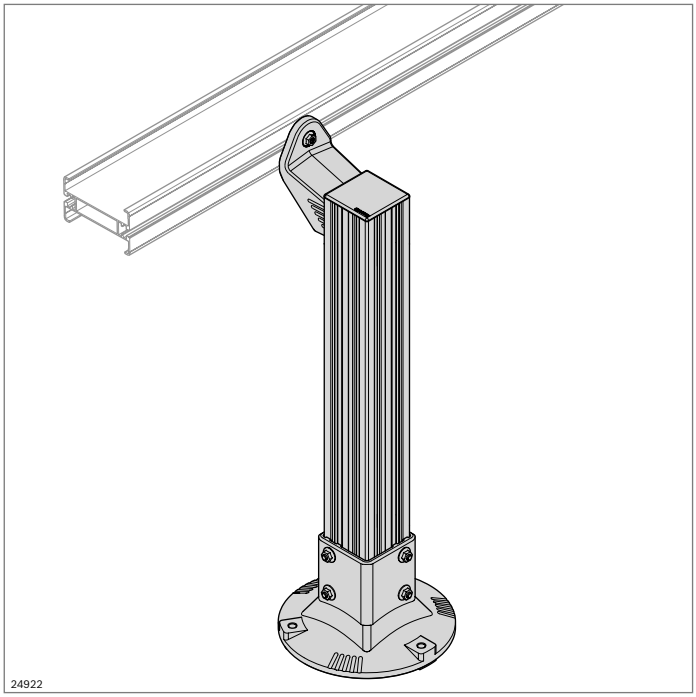

Supporting bracket AL, lateral

- Supporting bracket for connecting two profiles with defined spacing (approx. 2–3 m)
- Profile machining: not required
- Centering lugs make centering the supporting brackets in the slot easy
- If the centering lugs are removed, the supporting bracket can also be used for upward and downward sloping sections (up to approx. 45° depending on the return chain)
- Designed for attachment to a vertical 80x80 strut profile

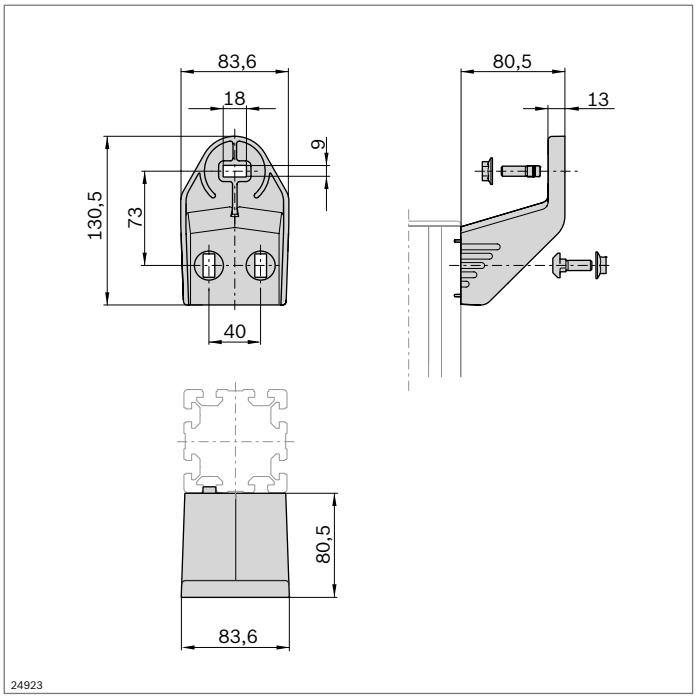

Supporting bracket VF*plus* lateral AL		No.	FS
	Set	**3 842 547 461**	6xFS1

Material: Holder: diecast aluminum, silver
Fastening material: steel, galvanized

Scope of delivery: Incl. fastening material (FS)

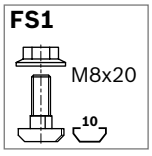

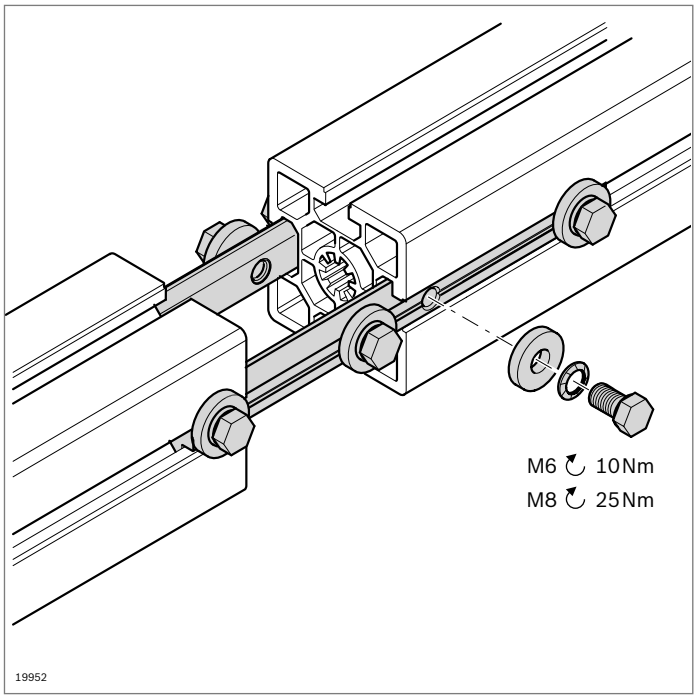

Profile connector

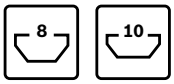

- Profile connector for end-to-end joining of any profiles
- For an especially strong connection: one profile connector per slot
- Profile machining: not required

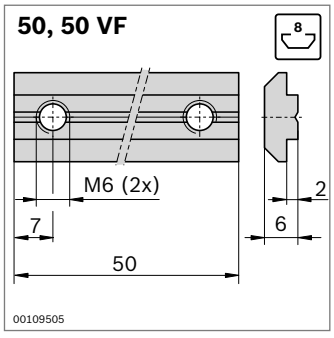

Profile connector	Slot		No.	FS
50 VF	8	10	**3 842 536 787**	2xFS2
50	8	1	**3 842 518 427**	2xFS1

Material: Steel, galvanized
Fastening material: steel, galvanized
Scope of delivery: Incl. fastening material (FS)

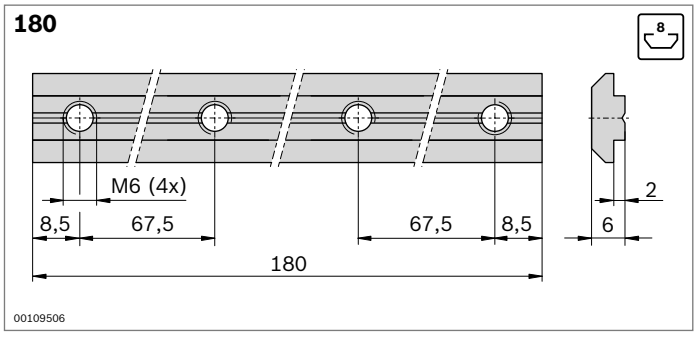

Profile connector	Slot	No.	FS
180	8	**3 842 521 216**	4xFS3

Material: Steel, galvanized
Fastening material: steel, galvanized
Scope of delivery: Incl. fastening material (FS)

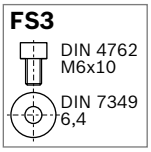

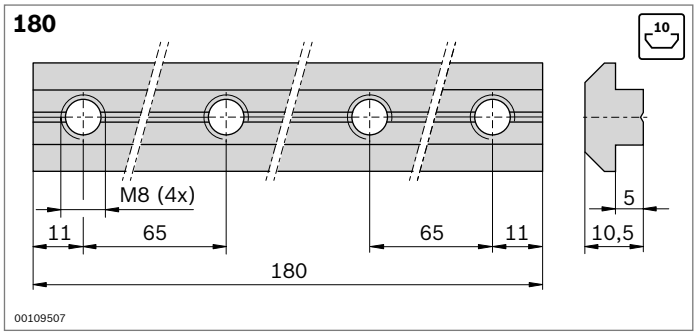

Profile connector	Slot	No.	FS
180	10	**3 842 528 746**	4xFS4

Material: Steel, galvanized
Fastening material: steel, galvanized
Scope of delivery: Incl. fastening material (FS)

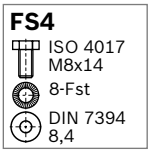

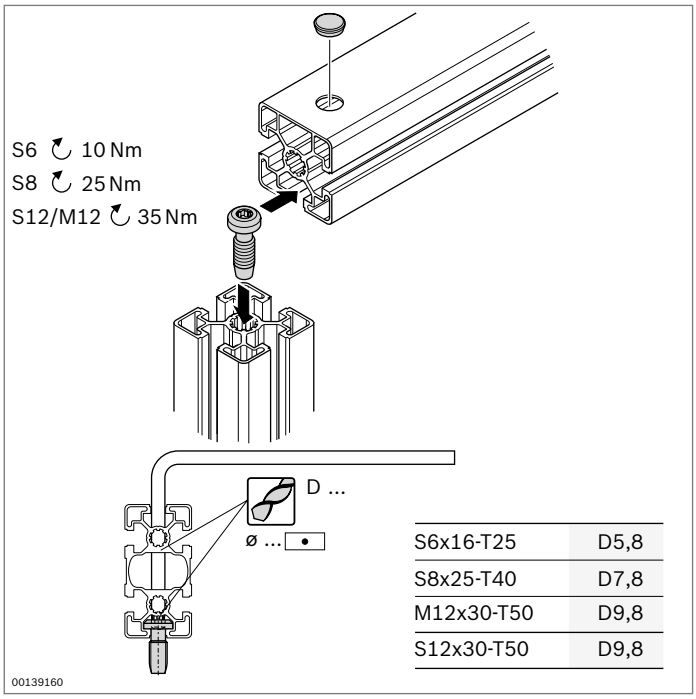

S6x16-T25	D5,8
S8x25-T40	D7,8
M12x30-T50	D9,8
S12x30-T50	D9,8

Central bolt, Anti-torsion element, cap

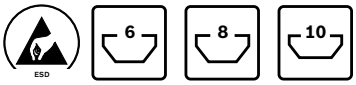

Central bolt

- Best-value connecting element
- Self-tapping screw, can be mounted without profile finishing
- Profile machining:
  - Thread cutting for M12x30 screw
  - Through-hole for screwdriver/offset screwdriver

Tool:
offset screwdriver (p. 14-6)

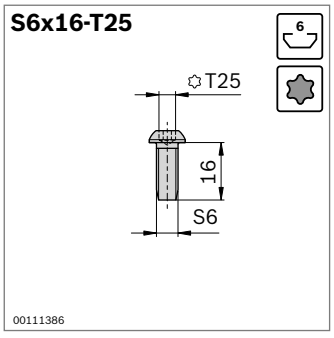

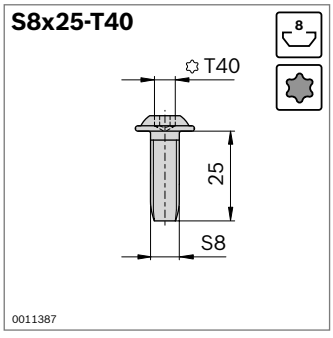

Central bolt	Slot	ESD		No.
S6x16-T25 (self-tapping)	6		100	**3 842 528 593**
S8x25-T40 (self-tapping)	8		100	**3 842 527 174**

Material: Steel, galvanized

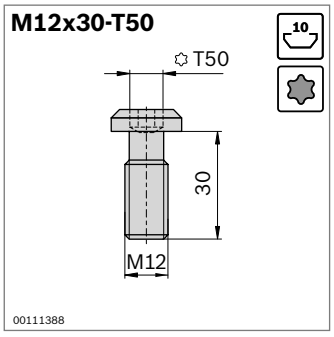

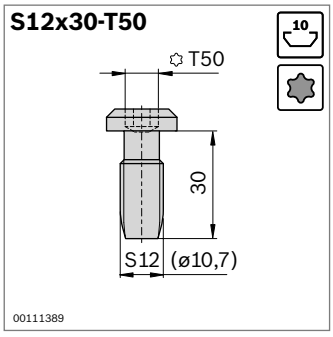

Central bolt	Slot	ESD		No.
M12x30-T50	10		100	**3 842 530 235**
S12x30-T50 (self-tapping)	10		100	**3 842 530 236**

Material: Steel, galvanized

Size	F_{max}	M_{max}
S6	500 N	8 Nm
S8	800 N	43 Nm
S12	1300 N	80 Nm
M12	3000 N	80 Nm

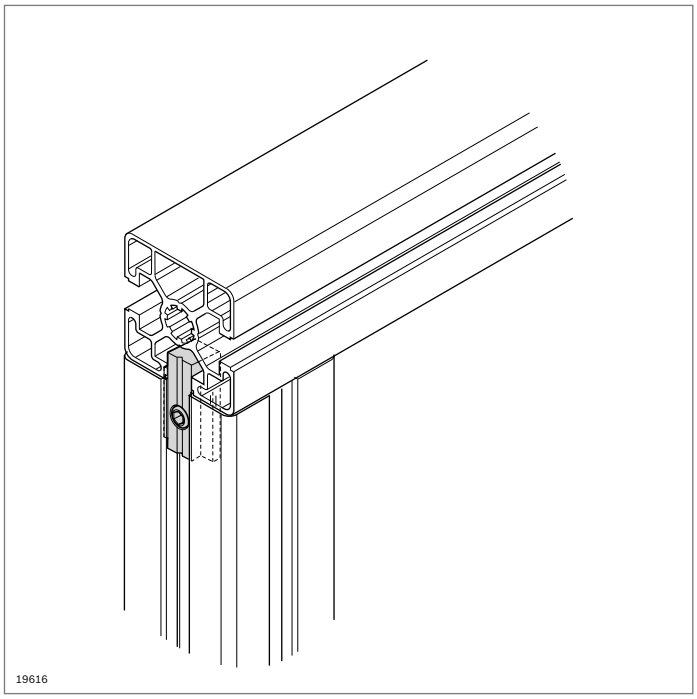

Anti-torsion element

- Provides torsion resistance for profile connections with central bolts or quick connectors
- Subsequent installation in the connection possible

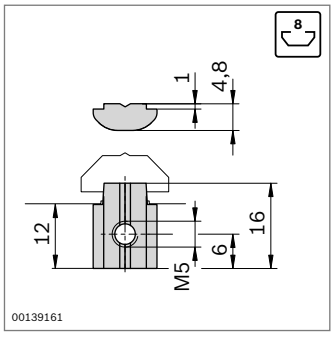

FS1

DIN 916
M5x8

Anti-torsion element	Slot		No.	FS
	8	10	**3 842 530 325**	FS1

Material: Steel, galvanized
Fastening material: steel, galvanized

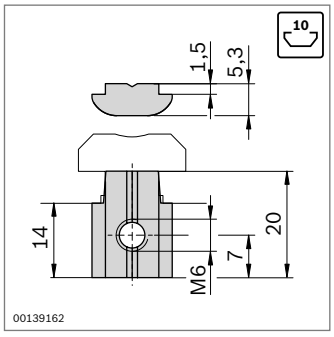

FS2

DIN 916
M6x12

Anti-torsion element	Slot		No.	FS
	10	10	**3 842 530 326**	FS2

Material: Steel, galvanized
Fastening material: steel, galvanized

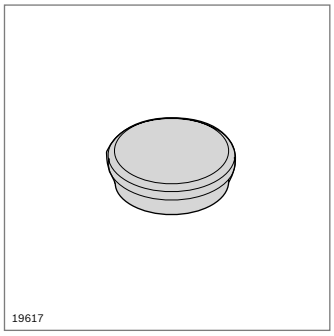

Cap

- For sealing through-holes in closed profiles

Cap	ø		No.
	5.8	100	**3 842 538 565**
	7.8	100	**3 842 538 566**
	9.8	100	**3 842 538 567**

Material: PA, light gray RAL 7035

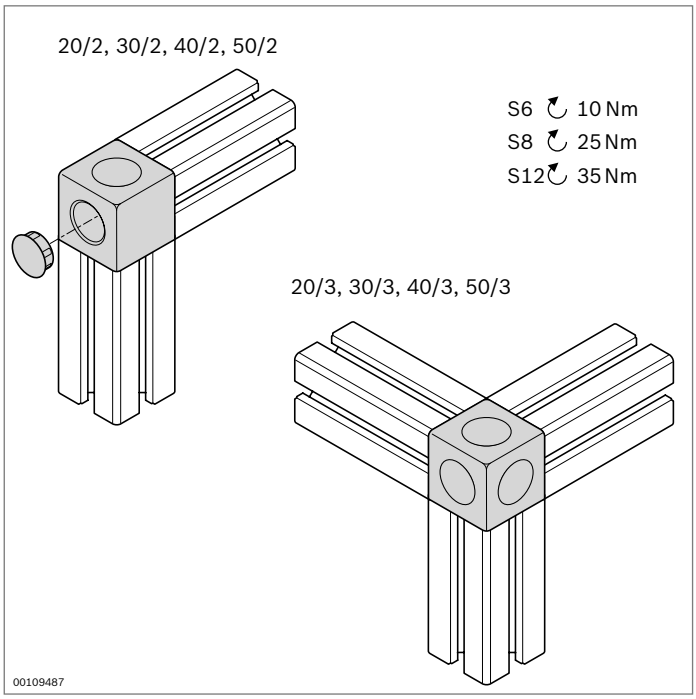

Cubic connector

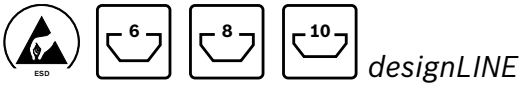

- For torsion-proof corner connections of profiles with equivalent cross-sections
- *designLINE* version with special silver paint (RAL 9006) for an attractive, high-quality design
- Caps to cover the openings
- Screw fitting on profile with self-tapping screws
- Profile machining: not required

Technical data (p. 19-8)

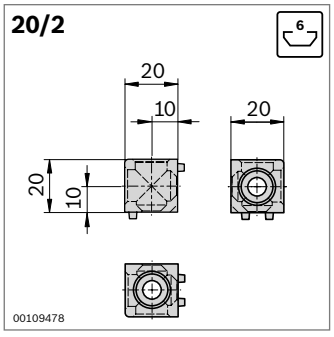

Model	Mmax
20/2	18 Nm

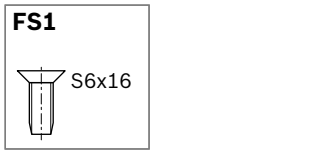

Cubic connector 20/2		Slot	ESD		No.	FS
Set (standard), signal gray		6	*	1	**3 842 549 858**	2xFS1
Set *designLINE,* signal gray		6	*	1	**3 842 549 859**	2xFS1
Cubic connector		6		20	**3 842 523 875**	
Cap D12	signal gray (PP)			100	**3 842 548 700**	
	black (PP)			100	**3 842 548 704**	
Countersunk screw S6x16		6		100	**3 842 517 132**	

Material: Cubic connector: Die-cast aluminum
designLINE cubic connector: painted (RAL 9006)
Fastening material: steel, galvanized

Scope of delivery: Set incl. fastening material (FS), caps

* Cubic connector creates conductive connection, but the caps included in the set are not ESD-compatible.

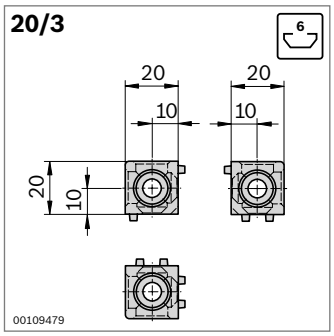

Model	$\frac{M_{max}}{2}$ $\frac{M_{max}}{2}$
20/3	23 Nm

FS1

Cubic connector 20/3		Slot	ESD		No.	FS
Set (standard), signal gray		6	*	1	**3 842 549 860**	3xFS1
Set *designLINE*, signal gray		6	*	1	**3 842 549 861**	3xFS1
Cubic connector		6		20	**3 842 523 872**	
Cap D12	signal gray (PP)			100	**3 842 548 700**	
	black (PP)			100	**3 842 548 704**	
Countersunk screw S6x16		6		100	**3 842 517 132**	

Material: Cubic connector: Die-cast aluminum
designLINE cubic connector: painted (RAL 9006)
Fastening material: steel, galvanized

Scope of delivery: Set incl. fastening material (FS), caps

* Cubic connector creates conductive connection, but the caps included in the set are not ESD-compatible.

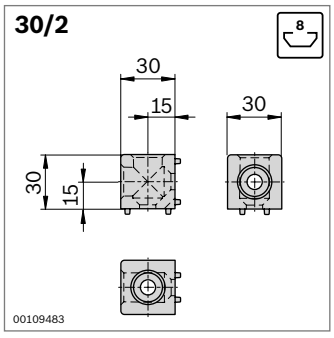

Model	M_{max}
30/2	80 Nm

FS2

Cubic connector 30/2		Slot	ESD		No.	FS
Set (standard), signal gray		8	*	1	**3 842 549 862**	2xFS2
Set *designLINE*, signal gray		8	*	1	**3 842 549 863**	2xFS2
Cubic connector		8		20	**3 842 523 876**	
Cap D18	signal gray (PP)			100	**3 842 548 701**	
	black (PP)			100	**3 842 548 705**	
Countersunk screw S8x25		8		100	**3 842 517 543**	

Material: Cubic connector: Die-cast aluminum
designLINE cubic connector: painted (RAL 9006)
Fastening material: steel, galvanized

Scope of delivery: Set incl. fastening material (FS), cover caps

* Cubic connector creates conductive connection, but the caps included in the set are not ESD-compatible.

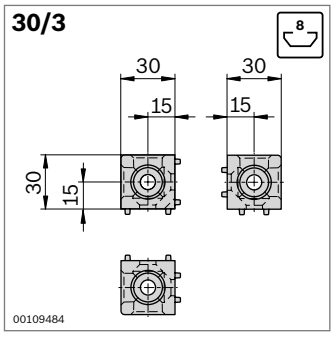

Model	$\frac{M_{max}}{2}$ $\frac{M_{max}}{2}$
30/3	85 Nm

FS2

Cubic connector 30/3		Slot	ESD		No.	FS
Set (standard), signal gray		8	*	1	**3 842 549 864**	3xFS2
Set *designLINE*, signal gray		8	*	1	**3 842 549 865**	3xFS2
Cubic connector		8		20	**3 842 523 873**	
Cap D18	signal gray (PP)			100	**3 842 548 701**	
	black (PP)			100	**3 842 548 705**	
Countersunk screw S8x25		8		100	**3 842 517 543**	

Material: Cubic connector: Die-cast aluminum
designLINE cubic connector: painted (RAL 9006)
Fastening material: steel, galvanized

Scope of delivery: Set incl. fastening material (FS), cover caps

* Cubic connector creates conductive connection, but the caps included in the set are not ESD-compatible.

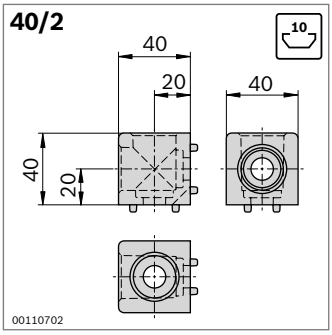

Model	M_{max}
40/2	60 Nm

FS3

Cubic connector 40/2		Slot	ESD		No.	FS
Set (standard), signal gray		10	*	1	**3 842 549 866**	2xFS3
Set *designLINE*, signal gray		10	*	1	**3 842 549 867**	2xFS3
Cubic connector		10		20	**3 842 529 010**	
Cap D24	signal gray (PP)			100	**3 842 548 702**	
	black (PP)			100	**3 842 548 706**	
Countersunk screw S12x30		10		100	**3 842 530 236**	

Material: Cubic connector: Diecast aluminum
designLINE cubic connector: painted (RAL 9006)
Fastening material: steel, galvanized

Scope of delivery: Set incl. fastening material (FS), caps

* Cubic connector creates conductive connection, but the caps included in the set are not ESD-compatible.

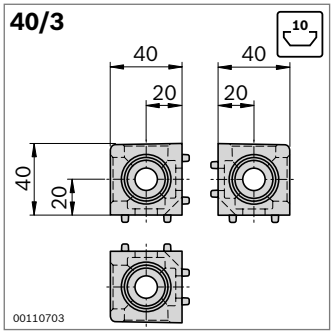

Model	$\frac{M_{max}}{2}$ $\frac{M_{max}}{2}$
40/3	70 Nm

FS3

Cubic connector 40/3		Slot	ESD		No.	FS
Set (standard), signal gray		10	*	1	**3 842 549 868**	3xFS3
Set *designLINE*, signal gray		10	*	1	**3 842 549 869**	3xFS3
Cubic connector		10		20	**3 842 529 011**	
Cap D24	signal gray (PP)			100	**3 842 548 702**	
	black (PP)			100	**3 842 548 706**	
Countersunk screw S12x30		10		100	**3 842 530 236**	

Material: Cubic connector: Die-cast aluminum
designLINE cubic connector: painted (RAL 9006)
Fastening material: steel, galvanized

Scope of delivery: Set incl. fastening material (FS), caps

* Cubic connector creates conductive connection, but the caps included in the set are not ESD-compatible.

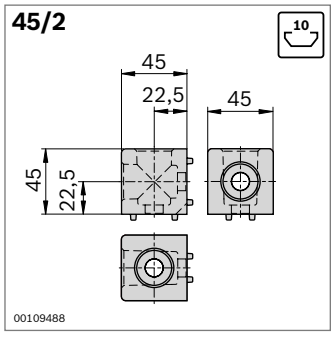

Model		M_{max}
45/2	45x45L	150 Nm
	45x45	200 Nm

FS3

Cubic connector 45/2		Slot	ESD		No.	FS
Set (standard), signal gray		10	*	1	**3 842 549 870**	2xFS3
Set *designLINE*, signal gray		10	*	1	**3 842 549 871**	2xFS3
Cubic connector		10		20	**3 842 523 877**	
Cap D24	signal gray (PP)			100	**3 842 548 702**	
	black (PP)			100	**3 842 548 706**	
Countersunk screw S12x30		10		100	**3 842 530 236**	

Material: Cubic connector: die-cast aluminum
designLINE cubic connector: painted (RAL 9006)
Fastening material: steel, galvanized

Scope of delivery: Set incl. fastening material (FS), caps

* Cubic connector creates conductive connection, but the caps included in the set are not ESD-compatible.

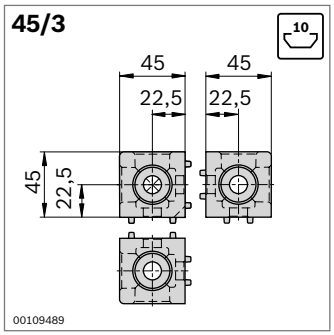

Model		$\frac{M_{max}}{2}$ $\frac{M_{max}}{2}$
45/3	45x45L	170 Nm
	45x45	240 Nm

FS3

Cubic connector 45/3		Slot	ESD		No.	FS
Set (standard), signal gray		10	*	1	**3 842 549 872**	3xFS3
Set *designLINE,* signal gray		10	*	1	**3 842 549 873**	3xFS3
Cubic connector		10		20	**3 842 523 874**	
Cap D24	signal gray (PP)			100	**3 842 548 702**	
	black (PP)			100	**3 842 548 706**	
Countersunk screw S12x30		10		100	**3 842 530 236**	

Material: Cubic connector: Die-cast aluminum
designLINE cubic connector: painted (RAL 9006)
Fastening material: steel, galvanized

Scope of delivery: Set incl. fastening material (FS), caps

* Cubic connector creates conductive connection, but the caps included in the set are not ESD-compatible.

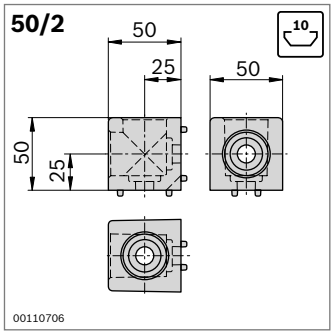

Model	M_{max}
50/2	120 Nm

FS3

Cubic connector 50/2		Slot	ESD		No.	FS
Set (standard), signal gray		10	*	1	**3 842 549 874**	2xFS3
Cubic connector		10		20	**3 842 529 012**	
Cap D30	signal gray (PP)			100	**3 842 548 703**	
	black (PP)			100	**3 842 548 707**	
Countersunk screw S12x30		10		100	**3 842 530 236**	

Material: Cubic connector: die-cast aluminum
Fastening material: steel, galvanized

Scope of delivery: Set incl. fastening material (FS), caps

* Cubic connector creates conductive connection, but the caps included in the set are not ESD-compatible.

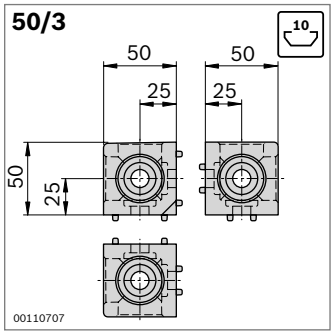

Model	$\frac{M_{max}}{2}$ $\frac{M_{max}}{2}$
50/3	140 Nm

FS3

Cubic connector 50/3		Slot	ESD		No.	FS
Set (standard), signal gray		10	*	1	**3 842 549 876**	3xFS3
Cubic connector		10		20	**3 842 529 013**	
Cap D30	signal gray (PP)			100	**3 842 548 703**	
	black (PP)			100	**3 842 548 707**	
Countersunk screw S12x30		10		100	**3 842 530 236**	

Material: Cubic connector: die-cast aluminum
Fastening material: steel, galvanized

Scope of delivery: Set incl. fastening material (FS), caps

* Cubic connector creates conductive connection, but the caps included in the set are not ESD-compatible.

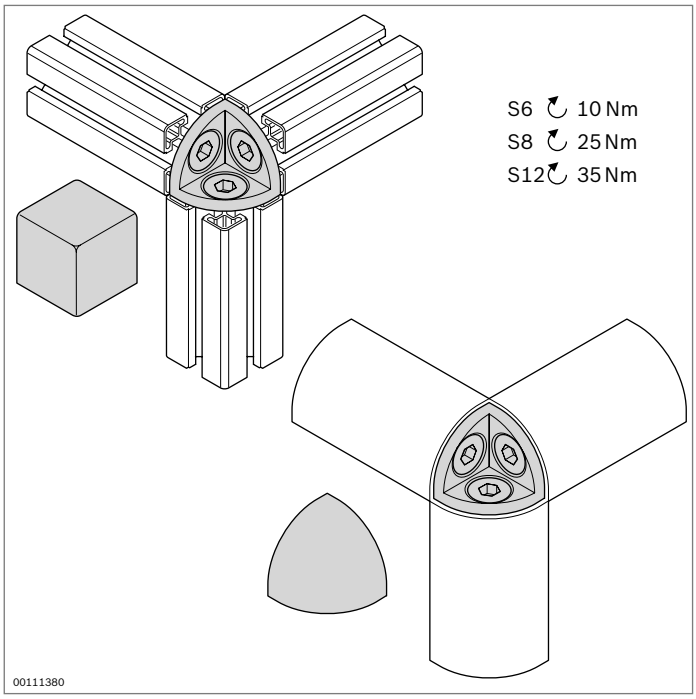

Corner piece

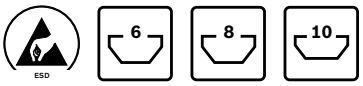

- Corner bracket for corner connection of three square or half-round profiles with equivalent cross-sections
- Screw fitting on profiles with self-tapping screws
- Ball or cubic caps to prevent injuries and avoid dirt
- Profile machining: not required

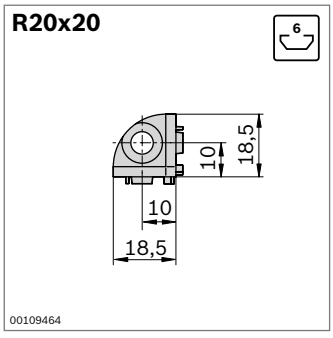

Model	$\frac{M_{max}}{2}$ $\frac{M_{max}}{2}$
20/3	23 Nm

FS1

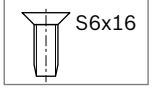

R20x20		Slot	ESD		No.	FS
Corner bracket		6		1	**3 842 519 318**	3xFS1
Cap K (ball)	signal gray (PP)			10	**3 842 548 708**	
	black (PP)			10	**3 842 548 712**	
Cap W (cube)	signal gray (PP)			10	**3 842 548 716**	
	black (PP)			10	**3 842 548 720**	

Material: Corner bracket: Diecast zinc
Fastening material: steel, galvanized

Scope of delivery: Incl. fastening material (FS)

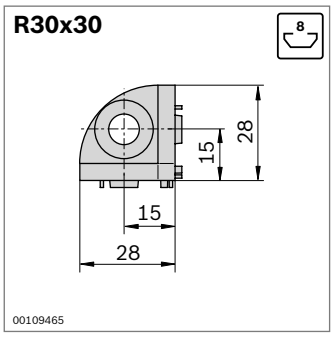

Model	$\frac{M_{max}}{2}$ $\frac{M_{max}}{2}$
30/3	85 Nm

FS2

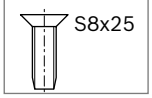

R30x30		Slot	ESD		No.	FS
Corner bracket		8		1	**3 842 519 319**	3xFS2
Cap K (ball)	signal gray (PP)			10	**3 842 548 709**	
	black (PP)			10	**3 842 548 713**	
Cap W (cube)	signal gray (PP)			10	**3 842 548 717**	
	black (PP)			10	**3 842 548 721**	

Material: Corner bracket: Diecast zinc
Fastening material: steel, galvanized

Scope of delivery: Incl. fastening material (FS)

R40x40

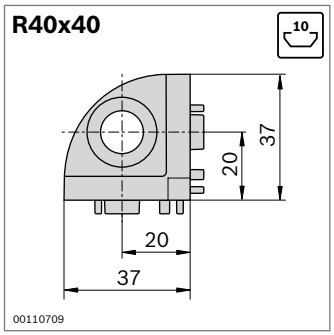

Model	$\frac{M_{max}}{2}$ $\frac{M_{max}}{2}$
40/3	70 Nm

FS3

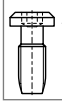

R40x40		Slot	ESD		No.	FS
Corner bracket		10		1	**3 842 529 404**	3xFS3
Cap K (ball)	signal gray (PP)			10	**3 842 548 710**	
	black (PP)			10	**3 842 548 714**	
Cap W (cube)	signal gray (PP)			10	**3 842 548 718**	
	black (PP)			10	**3 842 548 722**	

Material: Corner bracket: Diecast zinc
Fastening material: steel, galvanized

Scope of delivery: Incl. fastening material (FS)

R45x45

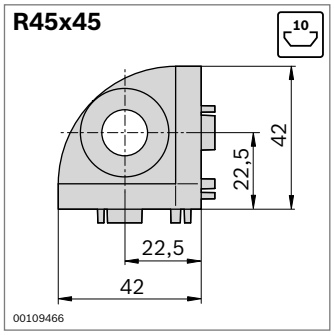

Model		$\frac{M_{max}}{2}$ $\frac{M_{max}}{2}$
45/3	45x45L	170 Nm
	45x45	240 Nm

FS4

R45x45		Slot	ESD		No.	FS
Corner bracket		10		1	**3 842 519 321**	3xFS4
Cap K (ball)	signal gray (PP)			10	**3 842 548 711**	
	black (PP)			10	**3 842 548 715**	
Cap W (cube)	signal gray (PP)			10	**3 842 548 719**	
	black (PP)			10	**3 842 548 723**	

Material: Corner bracket: Diecast zinc
Fastening material: steel, galvanized

Scope of delivery: Incl. fastening material (FS)

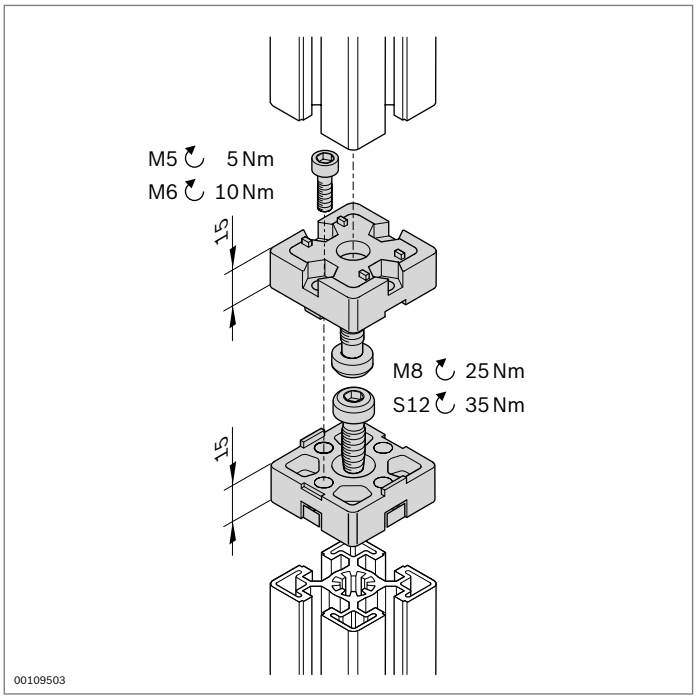

End connector

designLINE

- For end-to-end profile connections
- *designLINE* version with special silver paint (RAL 9006) for an attractive, high-quality design
- Profile machining:
  - 30x30: M8 thread cutting in core
  - 40x40, 45x45, 50x50: not required

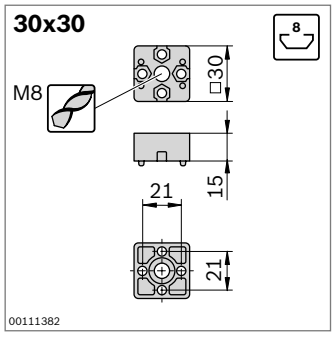

Model	M_{max}
30x30	81 Nm

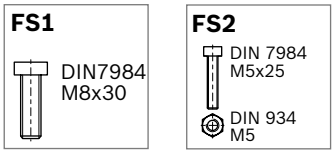

End connector		Slot	ESD	No.	FS
30x30	Set (standard)	8		**3 842 526 003**	2xFS1, 4xFS2
	designLINE set	8		**3 842 538 656**	2xFS1, 4xFS2

Material: End connector: diecast aluminum
designLINE end connector: painted (RAL 9006)
Fastening material: steel, galvanized

Scope of delivery: Set incl. fastening material (FS)

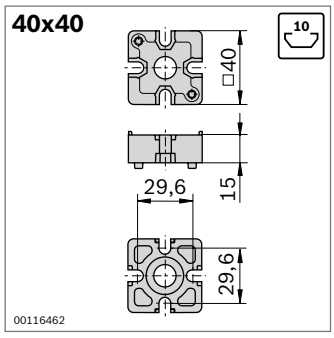

Model	M_{max}
40x40	170 Nm

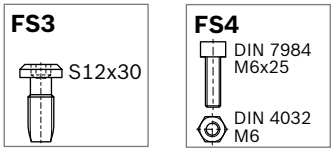

End connector		Slot	ESD	No.	FS
40x40	Set (standard)	10		**3 842 532 196**	2xFS3, 4xFS4
	designLINE set	10		**3 842 538 657**	2xFS3, 4xFS4

Material: End connector: die-cast aluminum
designLINE end connector: painted (RAL 9006)
Fastening material: steel, galvanized

Scope of delivery: Set incl. fastening material (FS)

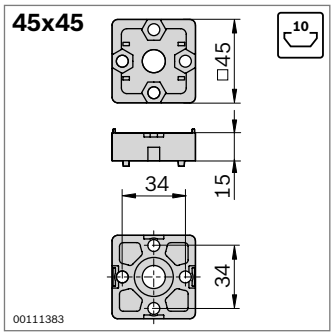

Model	Mmax
45x45	200 Nm

FS3

FS4

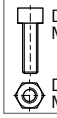

End connector		Slot	ESD	No.	FS
45x45 Set (standard)		10		**3 842 191 175**	2xFS3, 4xFS4
	designLINE set	10		**3 842 538 658**	2xFS3, 4xFS4

Material: End connector: Diecast zinc
designLINE end connector: painted (RAL 9006)
Fastening material: steel, galvanized

Scope of delivery: Set incl. fastening material (FS)

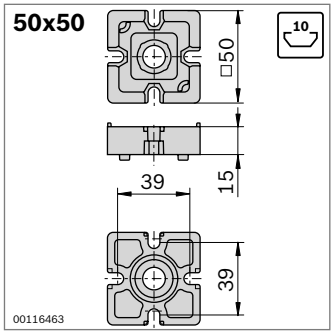

Model	Mmax
50x50	180 Nm

FS3

FS4

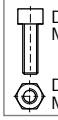

End connector	Slot	ESD	No.	FS
50x50 Set (standard)	10		**3 842 532 199**	2xFS3, 4xFS4

Material: End connector: Diecast zinc
Fastening material: steel, galvanized

Scope of delivery: Set incl. fastening material (FS)

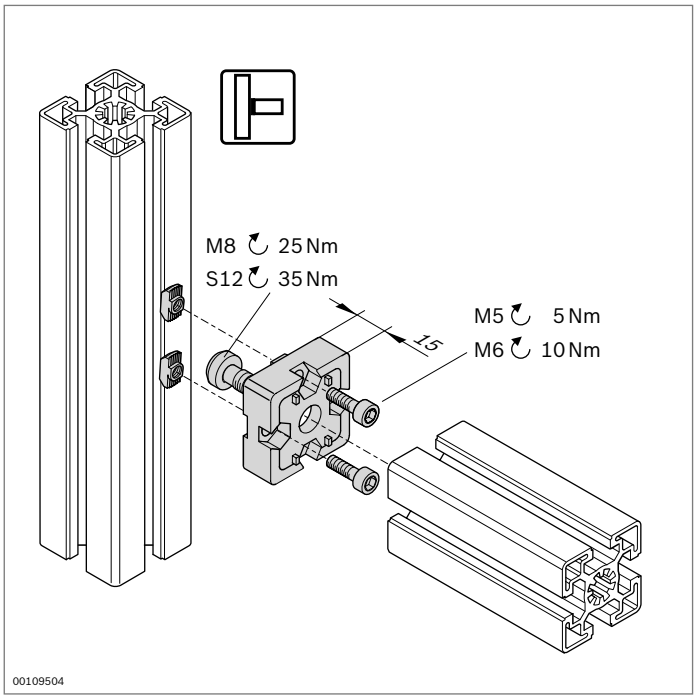

T-connector

designLINE

- For right-angled profile connections
- *designLINE* version with special silver paint (RAL 9006) for an attractive, high-quality design
- Profile machining:
  - 30x30: M8 thread cutting in central bores
  - 40x40, 45x45, 50x50: not required

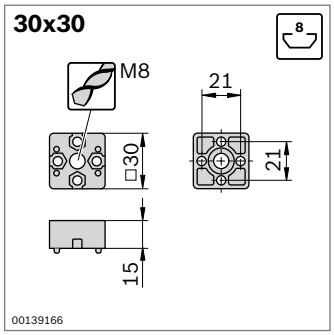

Model	Fmax	Mmax
30x30	4000 N	80 Nm

FS1

DIN7984 M8x30

FS2

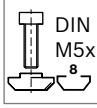

DIN 7984 M5x16

T-connector		Slot	ESD	No.	FS
30x30	Set (standard)	8		**3 842 524 476**	1xFS1, 2xFS2
	designLINE set	8		**3 842 538 696**	1xFS1, 2xFS2

Material: T-connector: diecast aluminum
designLINE T-connector: painted (RAL 9006)
Fastening material: steel, galvanized

Scope of delivery: Set incl. fastening material (FS)

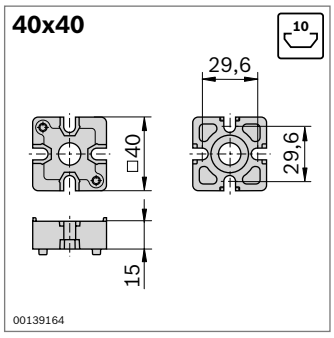

Model	Fmax	Mmax
40x40	9000 N	150 Nm

FS3

S12x30

FS4

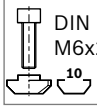

DIN 7984 M6x20

T-connector		Slot	ESD	No.	FS
40x40	Set (standard)	10		**3 842 532 195**	1xFS3, 2xFS4
	designLINE set	10		**3 842 538 697**	1xFS3, 2xFS4

Material: T-connector: diecast aluminum
designLINE T-connector: painted (RAL 9006)
Fastening material: steel, galvanized

Scope of delivery: Set incl. fastening material (FS)

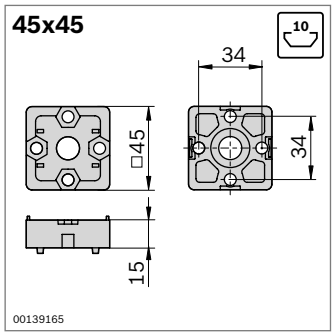

Model	F_{max}	M_{max}
45x45	9000 N	200 Nm

FS3

FS4

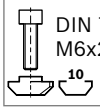

T-connector		Slot	ESD	No.	FS
45x45	Set (standard)	10		**3 842 520 802**	1xFS3, 2xFS4
	designLINE set	10		**3 842 538 698**	1xFS3, 2xFS4

Material: T-connector: Diecast zinc
designLINE T-connector: painted (RAL 9006)
Fastening material: steel, galvanized

Scope of delivery: Set incl. fastening material (FS)

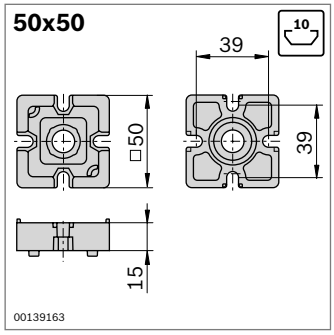

Model	F_{max}	M_{max}
50x50	10 000 N	170 Nm

FS3

FS4

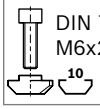

T-connector		Slot	ESD	No.	FS
50x50	Set (standard)	10		**3 842 532 198**	1xFS3, 2xFS4

Material: T-connector: Diecast zinc
Fastening material: steel, galvanized

Scope of delivery: Set incl. fastening material (FS)

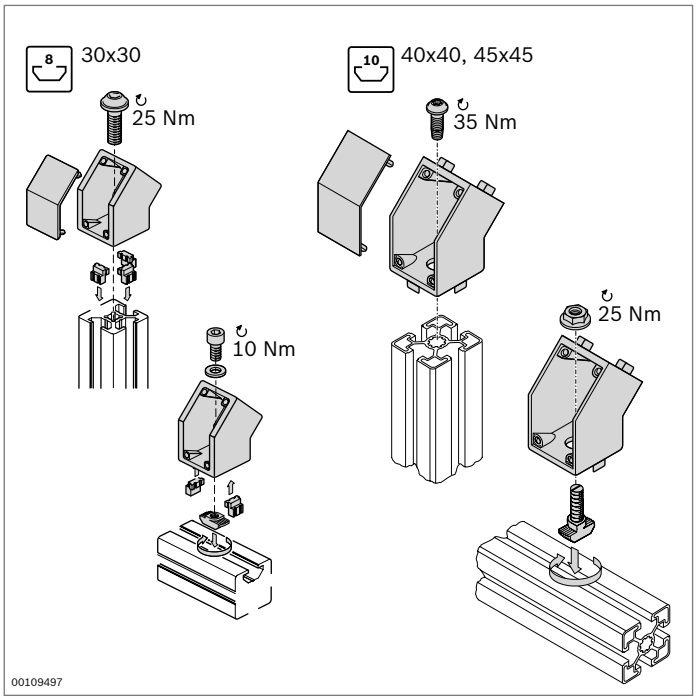

Connector 45°

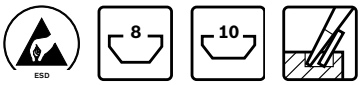

designLINE

- For connecting profiles at an angle of less than 45°
- Suitable for reinforcing frames
- Suitable for connections at the end-face or in the profile slot
- Connectors 45° 40x40 and 45x45 with centering lugs for easy positioning (centering lugs can simply be broken off for installation in the profile slot)
- *designLINE* version with special silver paint (RAL 9006) for an attractive, high-quality design
- Profile machining: not required

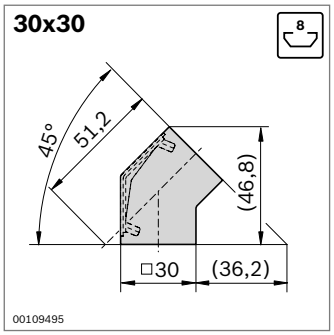

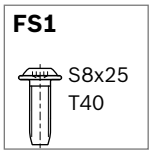

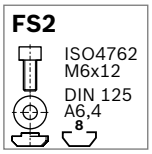

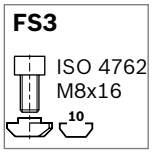

45° connector		Slot	ESD	No.	FS
30x30	Set (standard)	8		**3 842 518 426**	2xFS1, FS2, FS3
	designLINE set	8		**3 842 538 700**	2xFS1, FS2, FS3

Material: Connector 45°: Diecast zinc
designLINE 45° connector: painted (RAL 9006)
Centering element, cap: PA; black
Fastening material: steel, galvanized

Scope of delivery: Set incl. fastening material (FS), 6 x centering piece, cap

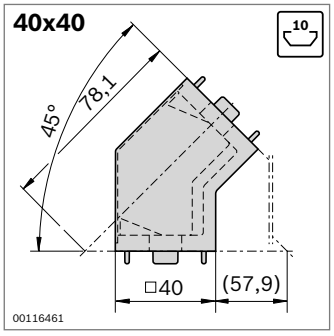

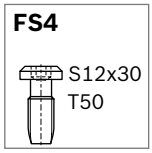

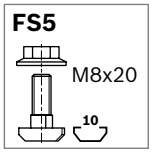

45° connector		Slot	ESD	No.	FS
40x40	Set (standard)	10		**3 842 532 205**	2xFS4, FS5
	designLINE set	10		**3 842 538 701**	2xFS4, FS5

Material: Connector 45°: cast aluminum
designLINE 45° connector: painted (RAL 9006)
Cap: PA; black
Fastening material: steel, galvanized

Scope of delivery: Set incl. fastening material (FS), cover cap

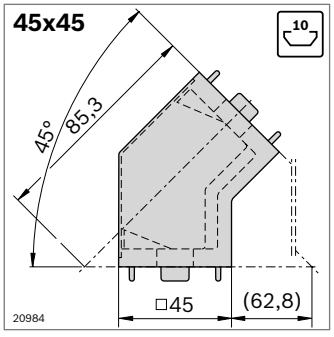

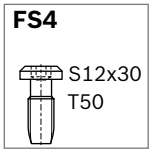

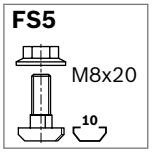

45° connector		Slot	ESD	No.	FS
45x45	Set (standard)	10		**3 842 535 428**	2xFS4, FS5
	designLINE set	10		**3 842 538 702**	2xFS4, FS5

Material: Connector 45°: cast aluminum
designLINE 45° connector: painted (RAL 9006)
Cap: PA; black
Fastening material: steel, galvanized

Scope of delivery: Set incl. fastening material (FS), cap

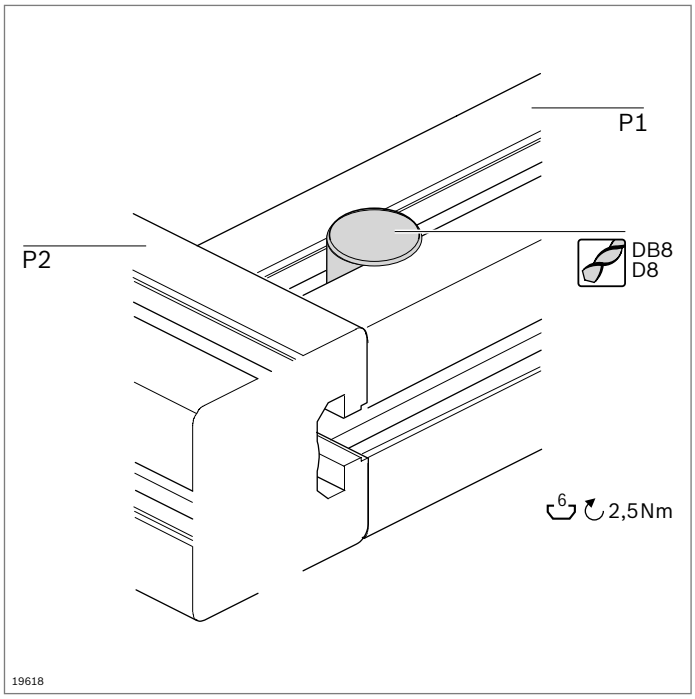

Quick connector, 6 mm slot, 0°, 90° cap

- For right-angled connections between two profiles
- Excellent accessibility for tools during mounting
- Quick connector for 6 mm slot with square head; can be used as a 0° or 90° connector
- Profile machining:
  blind hole DB8 or through-hole D8

Accessories, optional:
drilling jig (p. 14-2)

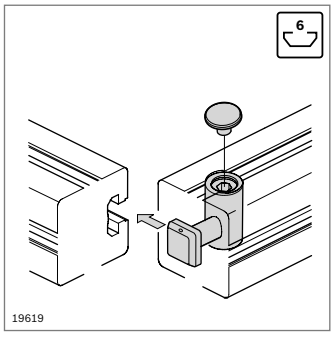

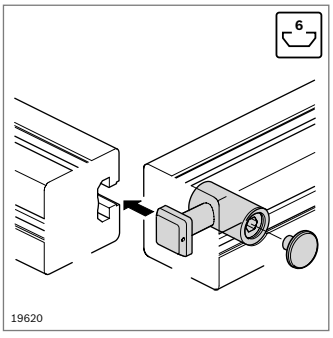

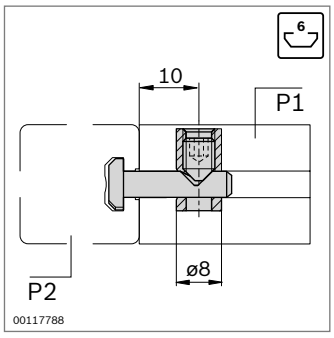

Slot	F_{max}	M_{max}
6 / 6	450 N	18 Nm

Quick-clamp connector, 0° / 90°	P1 / P2	D (mm)	ESD		No.
	6 / 6	8		10	**3 842 537 013**
Material:	Steel, stainless				

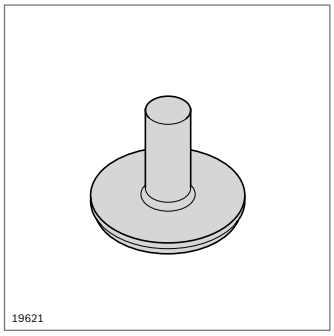

- Cap for connector sleeves

Cap	D (mm)		No.
	8	100	**3 842 538 562**
Material:	PE, light gray RAL 7035		

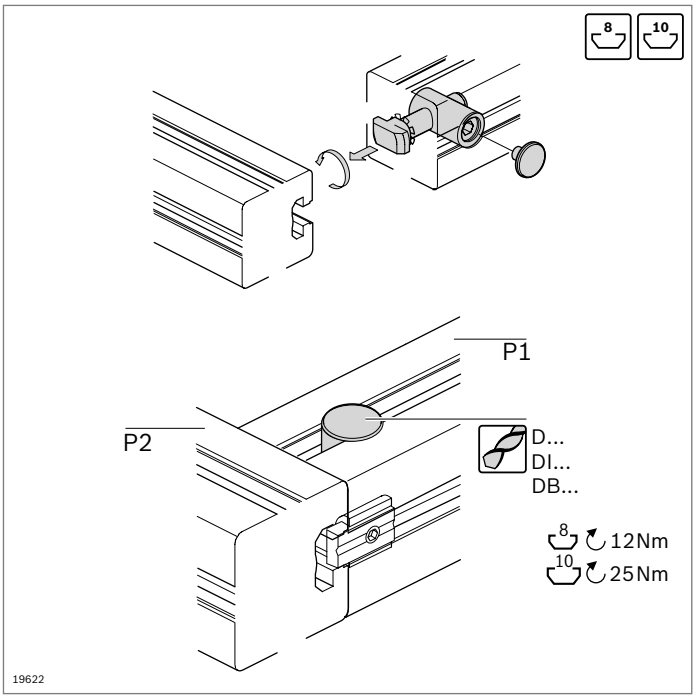

Quick connector, 8/10 mm slot, 0°

- For right-angled connections between two profiles
- Excellent accessibility for tools during mounting
- O-ring for mounting enables overhead assembly
- Quick connectors can be swiveled into the profile slot at the point of assembly
- Profile machining:
  blind hole DI, DB11, DB17 or through hole DI, D11, D17
- Note differing drilling intervals and load-bearing capacities when using with radial compensation (“Technical data” p. 19-6)

Accessories, optional:

- Anti-torsion element (p. 3-39)
- Radial compensation (p. 2-83)
- Drilling jig (p. 14-2)
- Cap (p. 3-51)

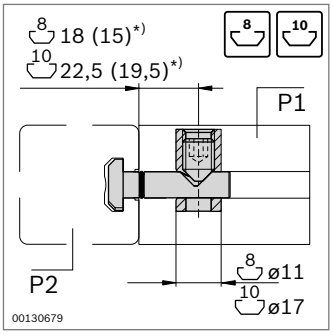

Slot	F_{max}	M_{max}
8 / 8	500 N	40 Nm
8 / 10	2000 N	70 Nm
10 / 10	4000 N	140 Nm

*) With the use of a radial compensation

Quick connector, 0°	P1 / P2	D (mm)	ESD		No.
Steel, galvanized	8 / 8	11		10	**3 842 535 459**
	8 / 10	11		10	**3 842 535 464**
	10 / 10	17		10	**3 842 535 458**
Steel, stainless	8 / 8	11		10	**3 842 548 934**
	8 / 10	11		10	**3 842 548 935**
	10 / 10	17		10	**3 842 548 936**

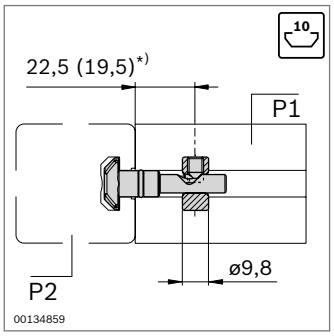

Slot	F_{max}	M_{max}
10 / 10	800 N	50 Nm

*) With the use of radial compensation

- Quick connector 9.8 with smaller connector sleeve
- The hole for the connector sleeve does not make contact with the slot flanks. This permits a visually attractive connection; the slot can be completely closed with the cover profile

Quick connector 0°, connector sleeve D = 9.8	P1 / P2	D (mm)	ESD		No.
Steel, galvanized	10 / 10	9.8[1]		10	**3 842 541 412**

[1] No standard hole in modular dimensions 40, 50 and 60, target distance from profile end: 22.5 mm

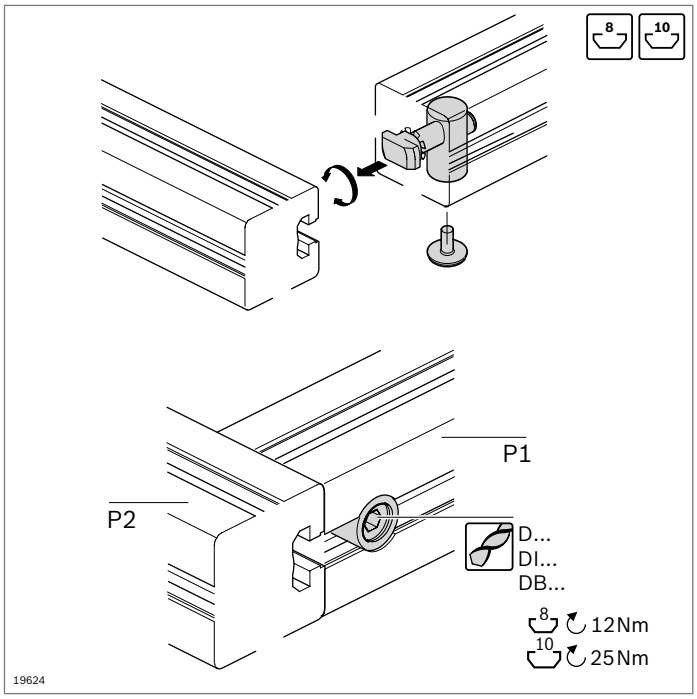

Quick connector, 8/10 mm slot, 90°, Cap

- Tie rod head rotated at a 90° angle to the connector sleeve
- Profile machining:
  blind hole DI, DB11, DB17 or through hole DI, D11, D17

Accessories, optional:

- Anti-torsion element (p. 3-39)
- Radial compensation (p. 2-83)
- Drilling jig (p. 14-2)
- Cap

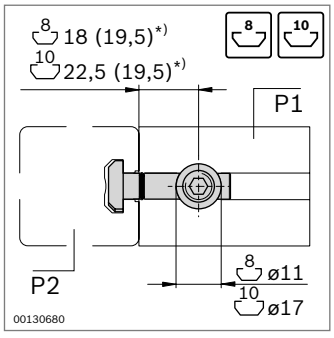

Slot	F_{max}	M_{max}
8 / 8	2000 N	70 Nm
10 / 10	4000 N	140 Nm

*) With the use of a radial compensation

Quick connector, 90°	P1 / P2	D (mm)	ESD		No.
Steel, galvanized	8 / 8	11		10	**3 842 535 465**
	10 / 10	17		10	**3 842 535 466**
Steel, stainless	8 / 8	11		10	**3 842 548 937**
	10 / 10	17		10	**3 842 548 938**

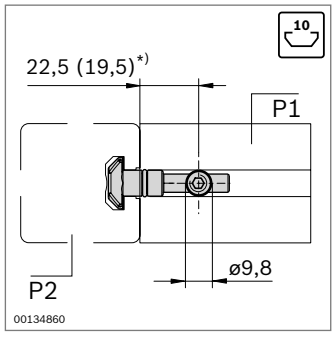

Slot	F_{max}	M_{max}
10 / 10	800 N	50 Nm

*) With the use of a radial compensation

Quick connector 90°, connector sleeve D = 9.8	P1 / P2	D (mm)	ESD		No.
Steel, galvanized	10 / 10	9.8[1]		10	**3 842 541 410**

[1] No standard hole in modular dimensions 40, 50 and 60
Target distance from profile end: 22.5 mm

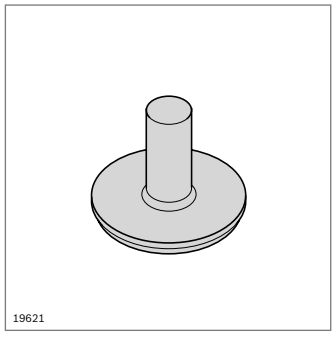

Cap	D (mm)		No.
	11	100	**3 842 538 563**
	17	100	**3 842 538 564**

Material: PE, light gray RAL 7035

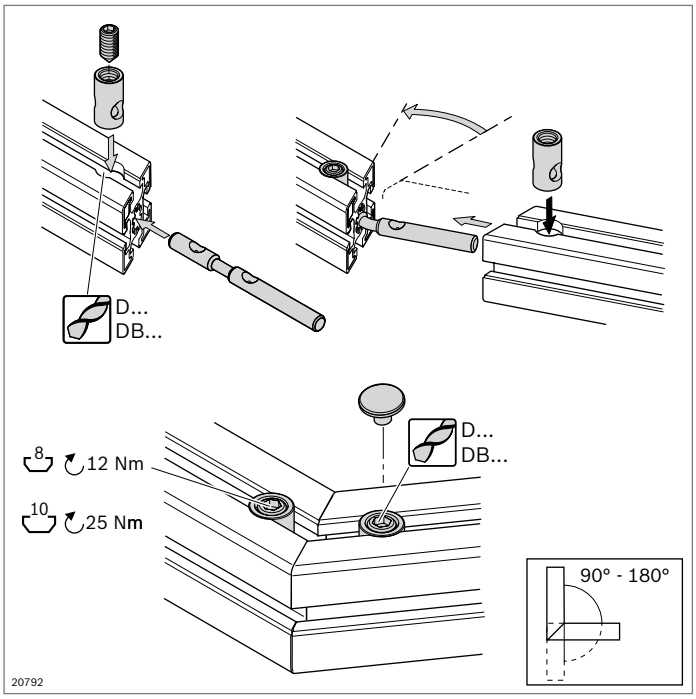

Quick connector, bendable – end-to-end

- For end-to-end connecting of two profiles with equal cross-sections and at any angle, e.g. for frames
- Profile machining:
  - blind hole DB11, DB17 or through hole D11, D17
  - miter cut

Technical data (p. 19-6)

Accessories:
- drilling jig (p. 14-2)
- cap (p. 3-51)

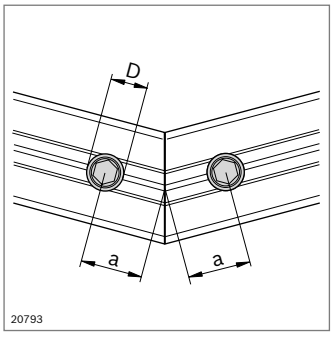

	M_{max}
30x30	24 Nm
40x40L	100 Nm
45x45L	110 Nm
45x45	145 Nm
50x50L	160 Nm

Quick connector, bendable	P1 / P2	a (mm)	D (mm)	ESD		No.
End-to-end	8 / 8	18	11		10	**3 842 535 630**
	10 / 10	22.5	17		10	**3 842 535 634**

Material: Tie rod: steel, stainless
Socket: steel, galvanized

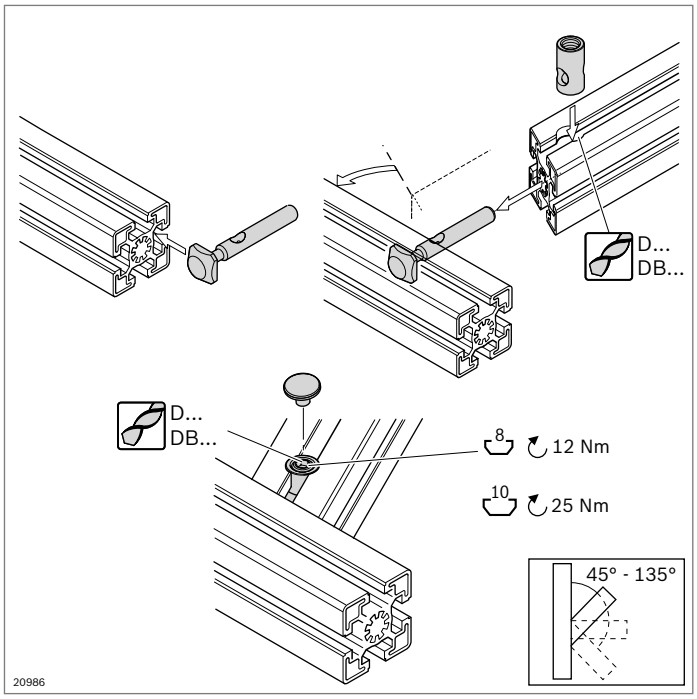

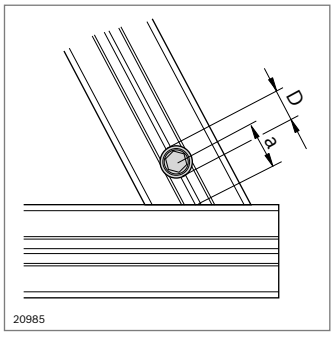

	Fmax	Mmax	Fmax	Mmax
30x30	1100 N	35 Nm	650 N	40 Nm
40x40L	1500 N	110 Nm	1000 N	80 Nm
45x45L	1500 N	120 Nm	1000 N	95 Nm
45x45	1500 N	140 Nm	1100 N	180 Nm
50x50L	1500 N	150 Nm	1100 N	180 Nm

Quick connector, bendable – end-to-slot

- For end-to-slot connecting of two profiles at any angle, e.g. for framework constructions
- Profile machining:
  - blind hole DB11, DB17 or through-hole D11, D17
  - miter cut

Technical data (p. 19-6)

Accessories:
- drilling jig (p. 14-2)
- cap (p. 3-51)

Quick connector, bendable	P1 / P2	a (mm)	D (mm)	ESD		No.
End-to-slot	8 / 8	18	11	✓	10	**3 842 535 629**
	10 / 10	22.5	17	✓	10	**3 842 535 635**

Material: Tie rod: steel, stainless
Socket: steel, galvanized

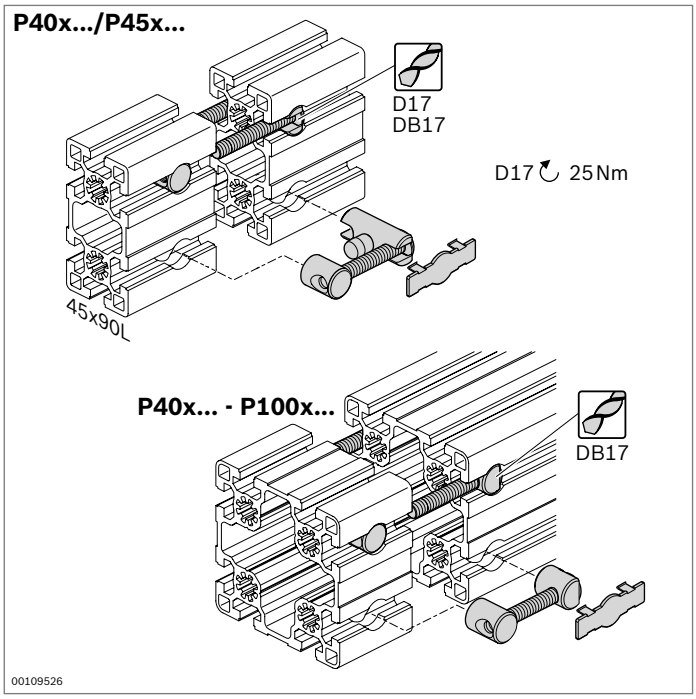

End connector

- For the end-to-end connecting of two profiles
- Standard profile finishes:
  - Through hole D17 (two-sided longitudinal end connector)
  - Blind hole DB17 or through hole D17 (one-sided longitudinal end connector)

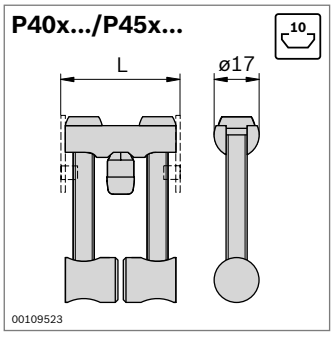

End connector, two-sided	L (mm)	ESD	No.
Profile 40x...	40	ESD	**3 842 529 293**
Profile 45x...	45	ESD	**3 842 529 248**

Material: End connector: screw steel, galvanized
Centering bolt, caps: PA; black
Scope of delivery: Incl. 4 x cap

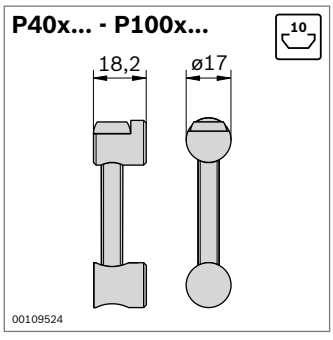

End connector, one-sided	ESD	No.
Profile 40x... – 100x...	ESD	**3 842 529 334**

Material: End connector: screw steel, galvanized
Centering pin, caps: PA; black
Scope of delivery: Incl. 2 x cap

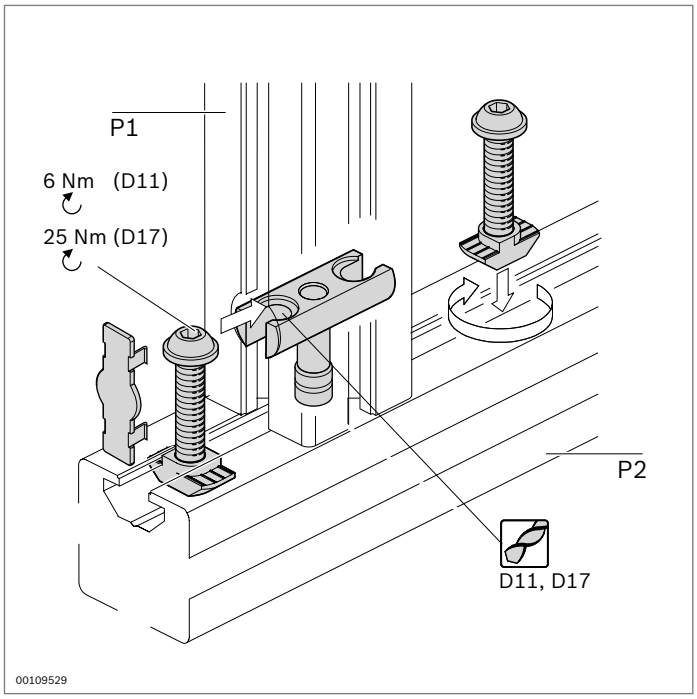

Bolt connector

- For right-angled connections between two profiles
- Designed for heavy loads and torsion
- Can be installed in closed frames
- Profile machining: through-hole D11, D17

Technical data (p. 19-7)

Accessories:
drilling jig (p. 14-2)

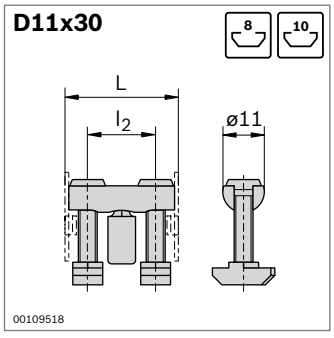

Bolt connector	P1 / P2	L (mm)	l_2 (mm)	ESD		No.
D11x30	8 / 8	30	18		10	**3 842 535 624**
	8 / 10	30	18		10	**3 842 535 583**

Material: Bolt connector: steel, galvanized
Centering pin, caps: PA; black

Scope of delivery: Incl. 2 x cap

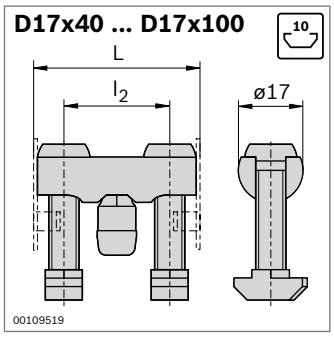

Bolt connector	P1 / P2	L (mm)	l_2 (mm)	ESD		No.
D17x40	10 / 10	40	23		10	**3 842 535 620**
D17x45	10 / 10	45	28		10	**3 842 500 921**
D17x50	10 / 10	50	33		10	**3 842 535 621**
D17x60	10 / 10	60	43		10	**3 842 500 922**
D17x80	10 / 10	80	63		10	**3 842 535 622**
D17x90	10 / 10	90	73		10	**3 842 500 923**
D17x100	10 / 10	100	83		10	**3 842 535 618**

Material: Bolt connector: steel, galvanized
Centering bolt, caps: PA; black

Scope of delivery: Incl. 2 x cap

Size	F_{max}	M_{max}	M_{max}
30	2500 N	60 Nm	20 Nm
40	4000 N	180 Nm	40 Nm
45	4000 N	180 Nm	60 Nm
50	4000 N	200 Nm	65 Nm

Size	F_{max}	M_{max}	M_{max}
60	4000 N	200 Nm	80 Nm
80	5000 N	800 Nm	170 Nm
90	5000 N	800 Nm	200 Nm
100	5000 N	1000 Nm	480 Nm

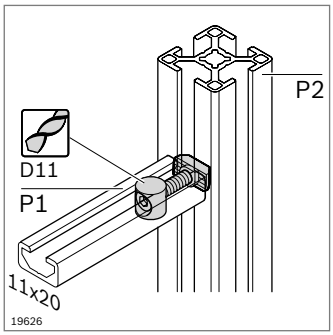

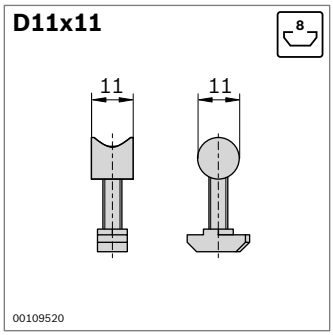

Bolt connector	P1 / P2	ESD		No.
D11x11	8 / 8		10	**3 842 535 617**

Material: Steel, galvanized

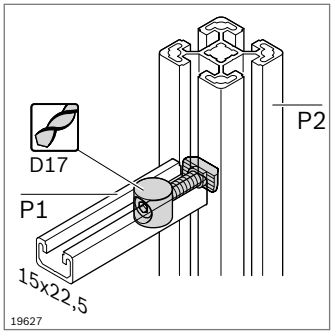

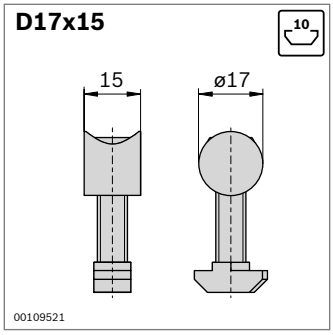

Bolt connector	P1 / P2	ESD		No.
D17x15	10 / 10		10	**3 842 535 619**

Material: Steel, galvanized

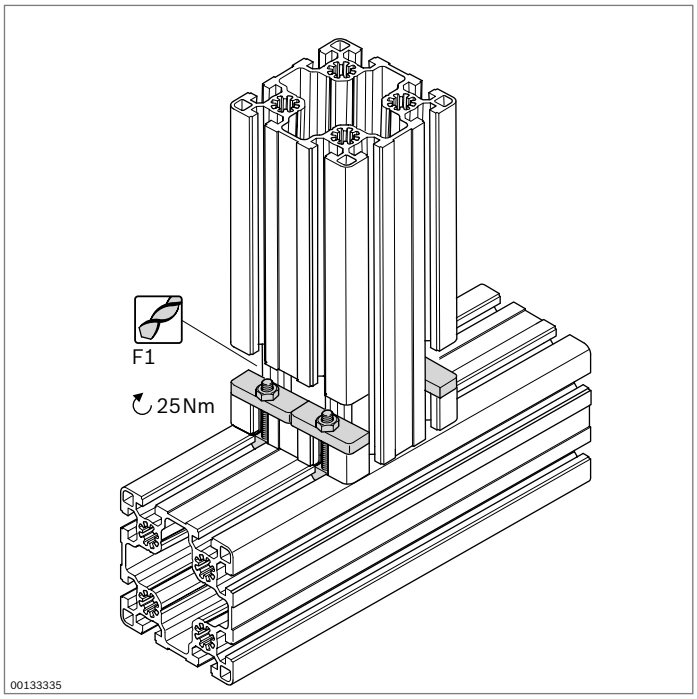

Transverse connector

- For right-angled connections between two profiles
- Excellent accessibility for tools during mounting
- Profile machining: Standard milling F1
- Bending moments must be avoided

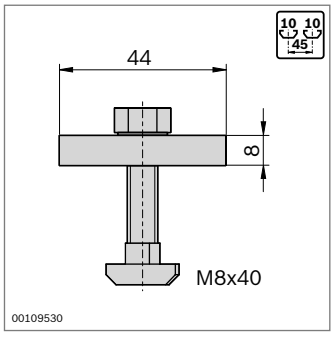

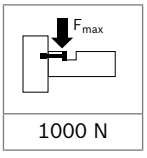

Transverse connector		No.
	10	**3 842 146 972**

Material: Steel, galvanized

Joints

Joint 45x45 lockable (p. 4-2)

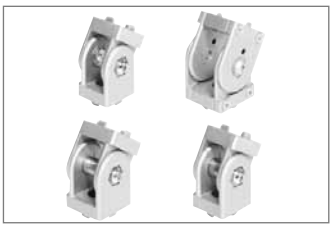

Joints (p. 4-3)

Swivel bearing (p. 4-7)

Supporting arm joint (p. 4-8)

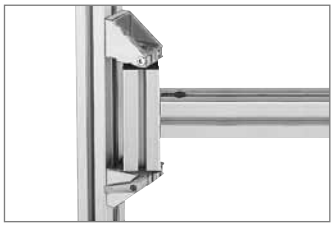

Bearing pedestal (p. 4-9)

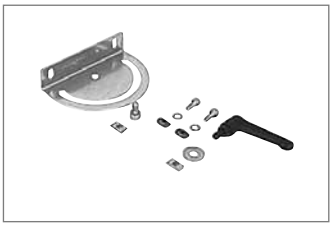

Swivel fastening (p. 4-10)

Clamping lever, star knob (p. 4-11)

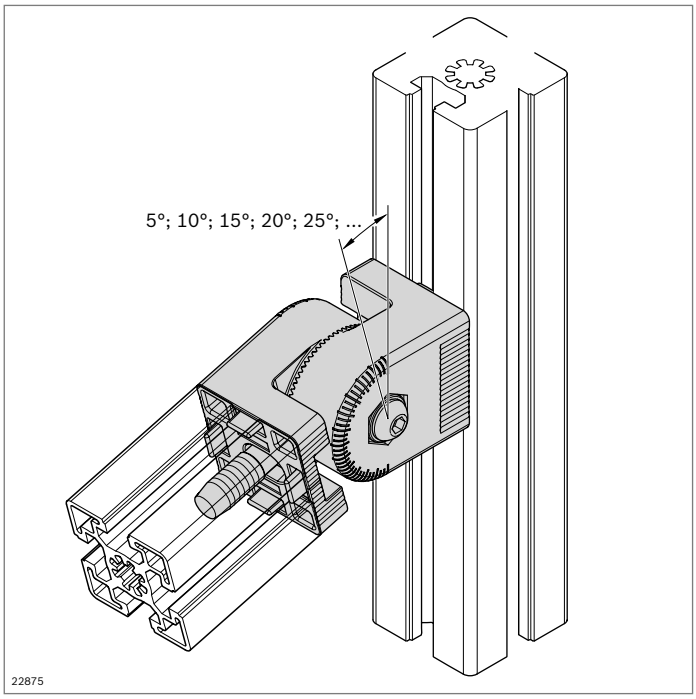

Joint 45x45 lockable

- For adjustable or rigid profile connections
- For high loads up to 100 Nm in the swivel direction
- Form fit thanks to Hirth teething
- Swivel range 180°
- Easy adjustment in a 5° grid
- Marking with a 5° graduation for easy detection of the adjustment angle
- Clamping and convenient adjustment of joint using a clamping lever or screw
- Profile finishing: not required (self-tapping screw for front end-to-end connections)
- Compatible with joint 45x45 and joint 45x45 support (p. 4-4)

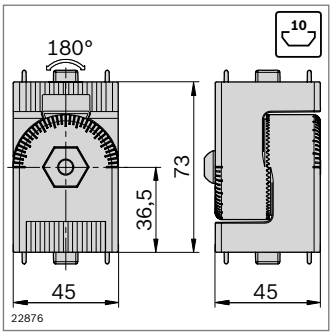

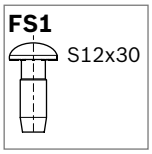

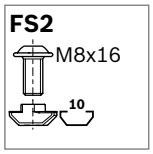

Accessories, optional:
Clamping lever (p. 4-11)

Joint 45x45 lockable	Slot	ESD	No.	FS
	10		**3 842 546 564**	2xFS1, 2xFS2

Material:	Diecast zinc Fastening material: steel, galvanized
Scope of delivery:	Incl. fastening material (FS)

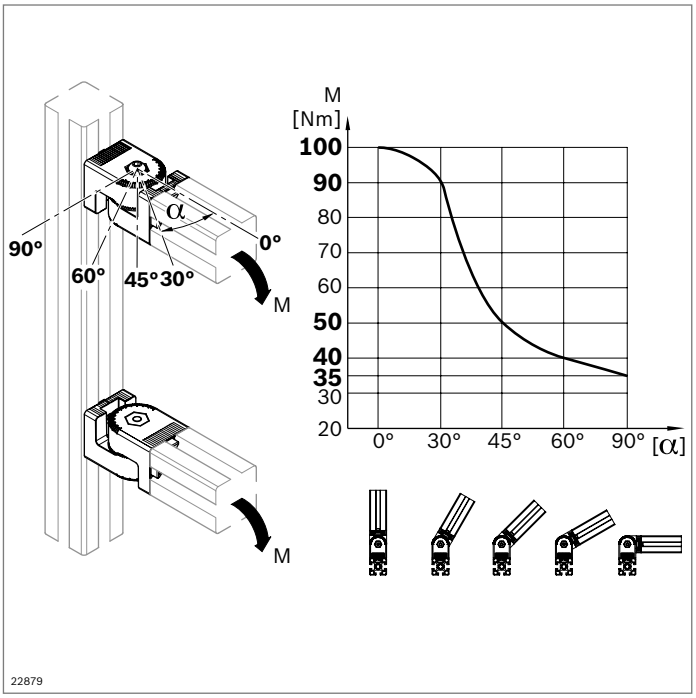

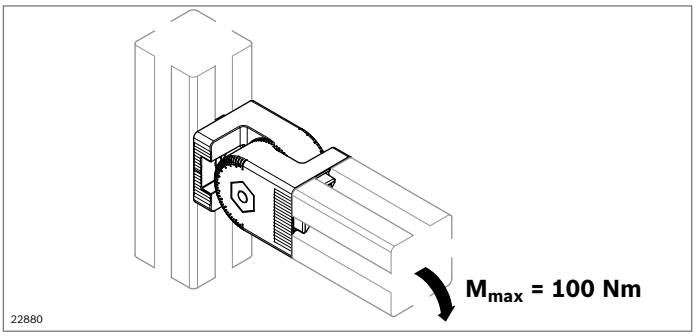

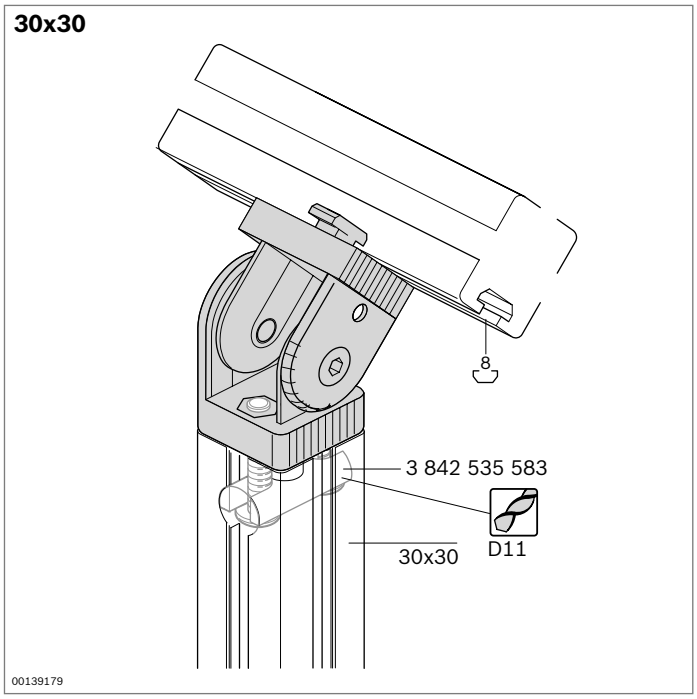

Joint 30x30

designLINE

- For movable or rigid profile connections at any angle
- Swivel range 182°
- With a 15° graduation
- Locking by clamping (5 Nm) or fixing with pins (15 Nm)
- *designLINE* version with special silver paint (RAL 9006) for an attractive, high-quality design
- Profile machining:
  Through hole D11 for end face profile connections

Required accessories:
bolt connector D11 for end face connections

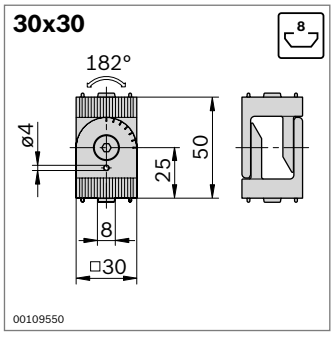

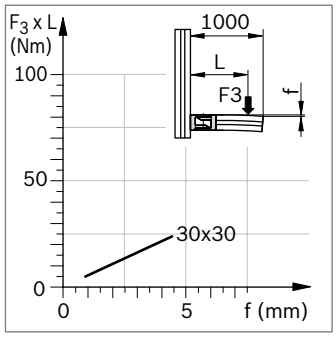

Joint 30x30	Slot	ESD	No.	FS
Standard	8		**3 842 502 683**	2xFS1, 4xFS2
designLINE	8		**3 842 538 683**	2xFS1, 4xFS2

Material: Standard: diecast zinc
designLINE: painted, RAL 9006
Fastening material: steel, galvanized

Scope of delivery: Incl. fastening material (FS)

FS1

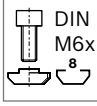

DIN 7984
M6x12

FS2

DIN 934
M5

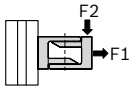

F1 (N)	**F2** (N)
10 000	600

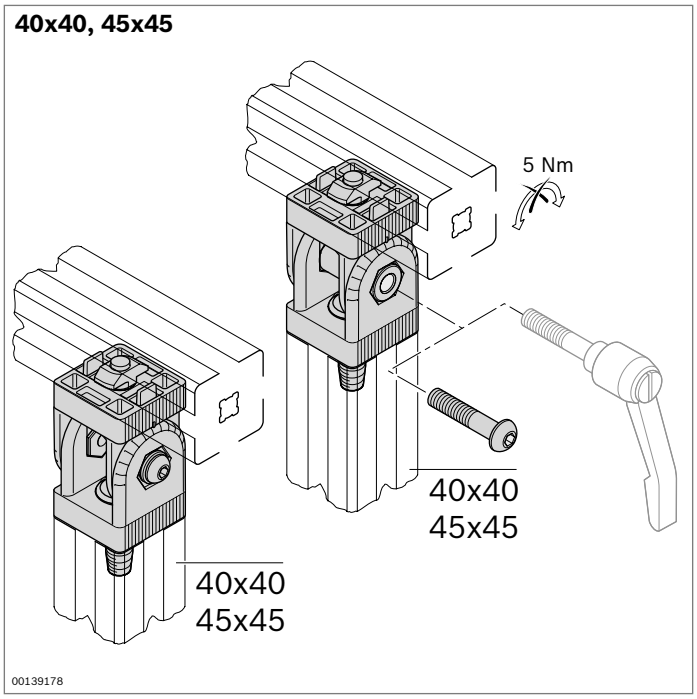

Joint 40x40, 40x40 support, 45x45, 45x45 support

designLINE

- For movable or rigid profile connections at any angle
- Swivel range 180°
- With a 15° graduation
- Clamping and convenient adjustment of “support” joint using a clamping lever (5 Nm)
- *designLINE* version with special silver paint (RAL 9006) for an attractive, high-quality design

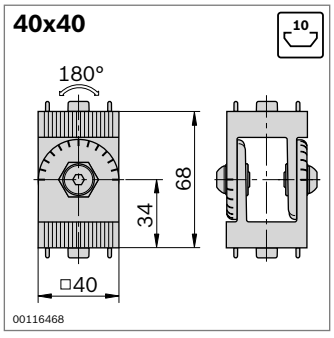

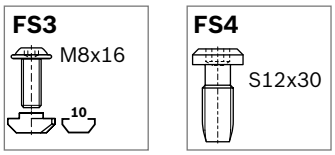

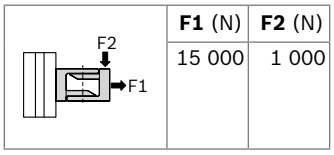

F1 (N)	F2 (N)
15 000	1 000

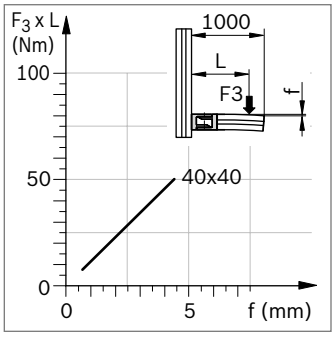

Joint 40x40	Slot	ESD	No.	FS
Standard	10		**3 842 543 401**	2xFS3, 2xFS4
designLINE	10		**3 842 538 684**	2xFS3, 2xFS4

Material: Standard: diecast aluminum
designLINE: painted, RAL 9006
Fastening material: steel, galvanized
Scope of delivery: Incl. fastening material (FS)

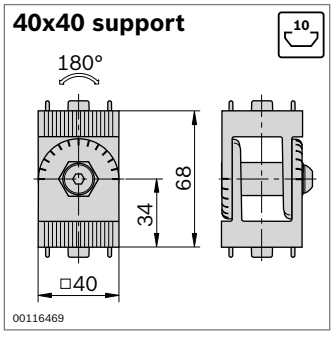

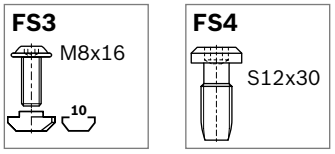

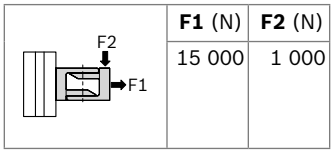

F1 (N)	F2 (N)
15 000	1 000

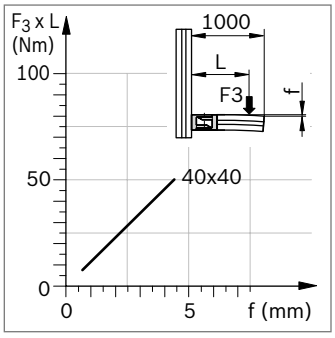

Joint 40x40 support	Slot	ESD	No.	FS
Standard	10		**3 842 543 402**	2xFS3, 2xFS4
designLINE	10		**3 842 538 685**	2xFS3, 2xFS4

Material: Standard: die-cast aluminum
designLINE: painted, RAL 9006
Fastening material: steel, galvanized
Scope of delivery: Incl. fastening material (FS)

Clamping lever	No.
for joint 40x40 support	**3 842 516 847**

Material: diecast zinc, black polymer coating

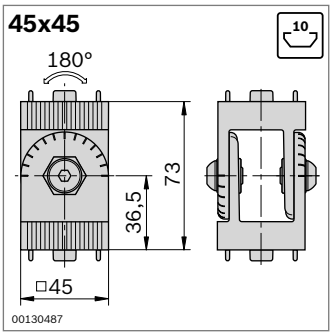

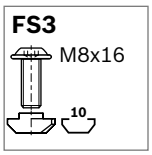

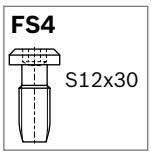

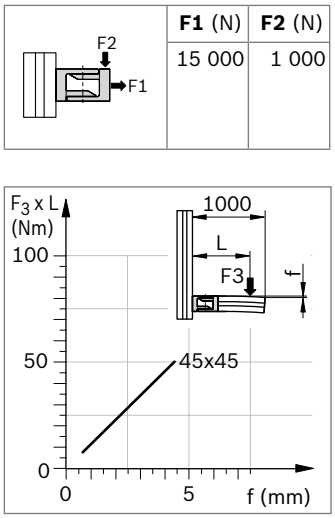

F1 (N)	F2 (N)
15 000	1 000

Joint 45x45	Slot	ESD	No.	FS
Standard	10		**3 842 543 403**	2xFS3, 2xFS4
designLINE	10		**3 842 538 686**	2xFS3, 2xFS4

Material: Standard: diecast aluminum
designLINE: painted, RAL 9006
Fastening material: steel, galvanized

Scope of delivery: Incl. fastening material (FS)

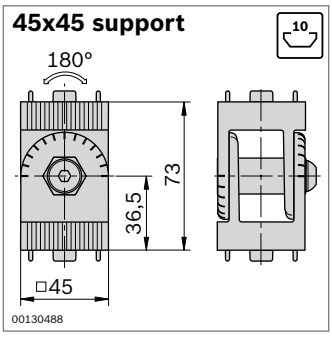

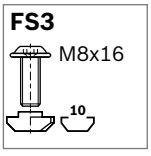

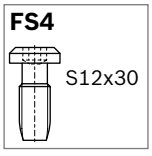

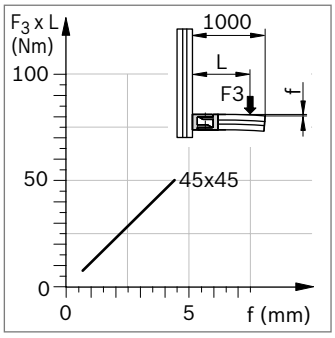

F1 (N)	F2 (N)
15 000	1 000

Joint 45x45 support	Slot	ESD	No.	FS
Standard	10		**3 842 543 404**	2xFS3, 2xFS4
designLINE	10		**3 842 538 687**	2xFS3, 2xFS4

Material: Standard: diecast aluminum
designLINE: painted, RAL 9006
Fastening material: steel, galvanized

Scope of delivery: Incl. fastening material (FS)

Clamping lever	No.
for joint 45x45 support	**3 842 538 607**

Material: Diecast zinc, black polymer coating

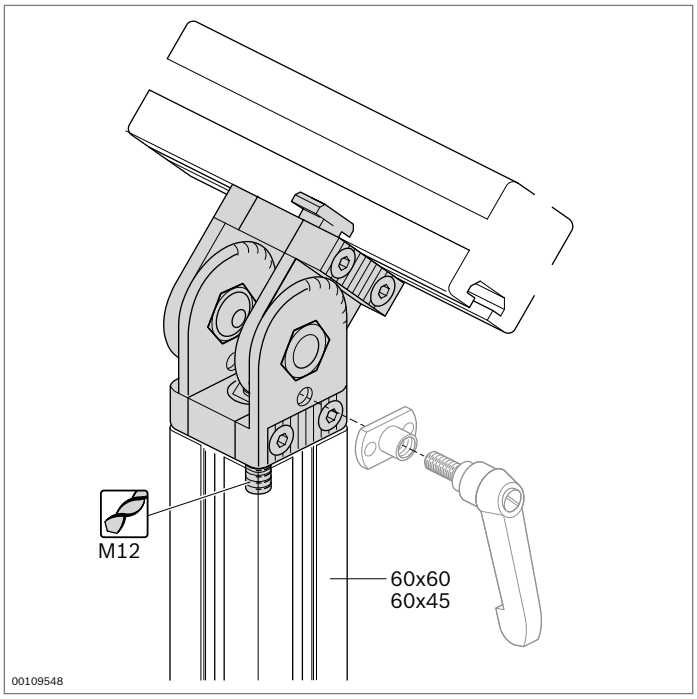

Joint 60x45, 60x60

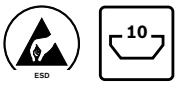

designLINE

- For movable or rigid profile connections at any angle
- Swivel range 182°
- With a 15° graduation
- Locking by clamping (5 Nm) or fixing with pins (15 Nm)
- The joint can be adjusted using a clamping lever.
- *designLINE* version with special silver paint (RAL 9006)
- Profile machining:
  Thread cutting (M12) in central bore for end connection

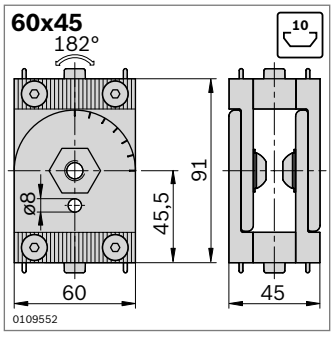

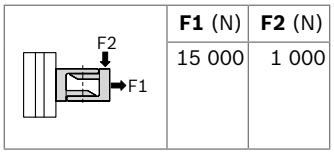

F1 (N)	F2 (N)
15 000	1 000

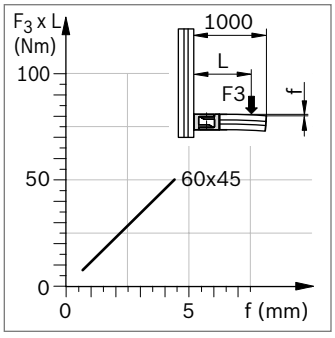

FS5

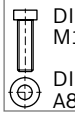

DIN 7984 M12x40

DIN 125 A8,4

FS6

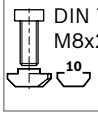

DIN 7984 M8x20

Joint 60x45	Slot	ESD	No.	FS
Standard	10	ESD	**3 842 502 688**	2xFS5, 2xFS6
designLINE	10	ESD	**3 842 539 799**	2xFS5, 2xFS6

Material: Standard: diecast zinc
designLINE: painted, RAL 9006
Fastening material: steel, galvanized

Scope of delivery: Incl. fastening material (FS)

Clamping lever	No.
for joint 60x45	**3 842 505 144**

Material: Diecast zinc, black polymer coating

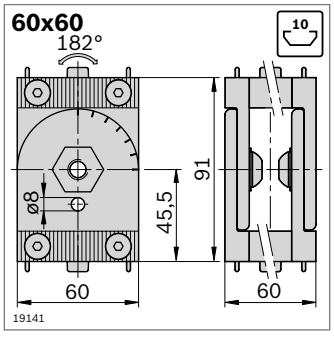

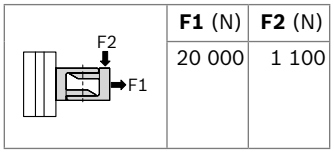

F1 (N)	F2 (N)
20 000	1 100

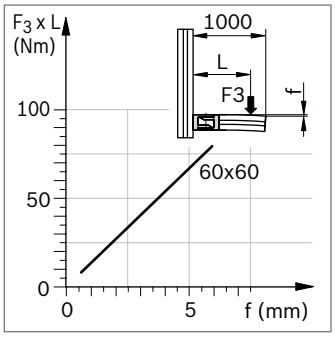

FS5

DIN 7984 M12x40

DIN 125 A8,4

FS6

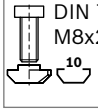

DIN 7984 M8x20

Joint 60x60	Slot	ESD	No.	FS
Standard	10	ESD	**3 842 502 687**	2xFS5, 2xFS6
designLINE	10	ESD	**3 842 539 800**	2xFS5, 2xFS6

Material: Standard: diecast zinc
designLINE: painted, RAL 9006
Fastening material: steel, galvanized

Scope of delivery: Incl. fastening material (FS)

Clamping lever	No.
for joint 60x60	**3 842 505 144**

Material: Diecast zinc, black polymer coating

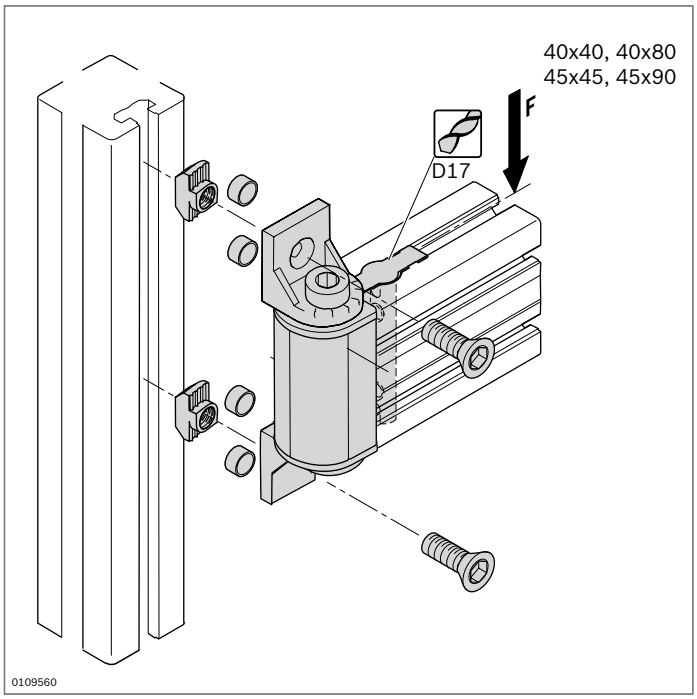

Swivel bearing

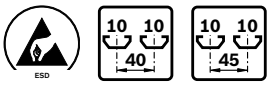

designLINE

- Suitable for swiveling right-angled profile connections, e.g. for constructing supporting arms or doors
- *designLINE* version with special silver paint (RAL 9006) for an attractive, high-quality design
- Profile machining:
  drilling of through hole D17

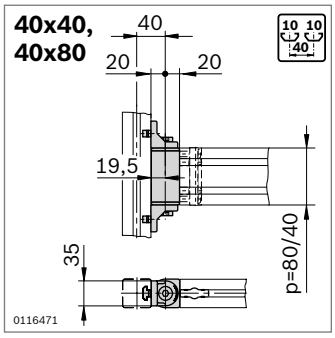

Profile	F L
	M_{max} = F x L (Nm)
40x40	40
40x80	130

FS1

Swivel bearing		p (mm)	ESD	No.	FS
40x40	Standard	40		**3 842 532 208**	2xFS1
	designLINE	40		**3 842 538 688**	2xFS1
40x80	Standard	80		**3 842 532 209**	2xFS1
	designLINE	80		**3 842 538 689**	2xFS1

Material: Standard: diecast aluminum
designLINE: painted, RAL 9006
Fastening material: steel, galvanized
Cap: PA; black

Scope of delivery: Incl. caps, bolt connectors, fastening material (FS)

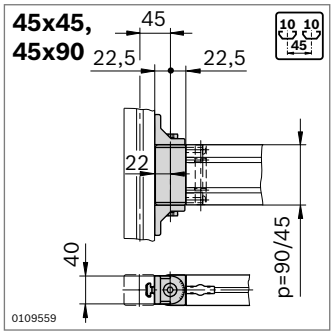

Profile	F L
	M_{max} = F x L (Nm)
45x45	50
45x90	150

FS1

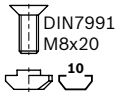

Swivel bearing		p (mm)	ESD	No.	FS
45x45	Standard	45		**3 842 522 634**	2xFS1
	designLINE	45		**3 842 538 690**	2xFS1
45x90	Standard	90		**3 842 522 633**	2xFS1
	designLINE	90		**3 842 538 691**	2xFS1

Material: Standard: diecast zinc
designLINE: painted, RAL 9006
Fastening material: steel, galvanized
Cap: PA; black

Scope of delivery: Incl. caps, bolt connectors, fastening material (FS)

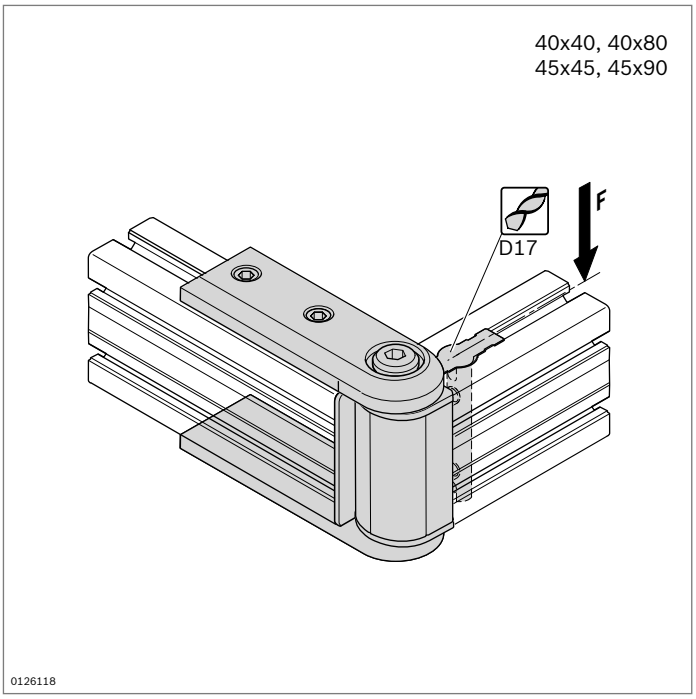

Supporting arm joint

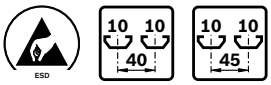

designLINE

- Suitable for swiveling end connections, e.g. for the construction of supporting arms
- *designLINE* version with special silver paint (RAL 9006) for an attractive, high-quality design
- Profile machining:
  drilling of through hole D17

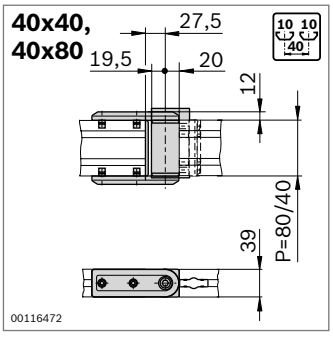

Profile	F, L
	M_{max} = F x L (Nm)
40x40	40
40x80	130

FS1
ISO4762
M6x16
10

Supporting arm joint		p (mm)	ESD	No.	FS
40x40	Standard	40		**3 842 532 206**	4xFS1
	designLINE	40		**3 842 538 692**	4xFS1
40x80	Standard	80		**3 842 532 207**	4xFS1
	designLINE	80		**3 842 538 693**	4xFS1

Material: Standard: diecast zinc
designLINE: painted (RAL 9006)
Cap: PA; black
Fastening material: steel, galvanized
Scope of delivery: Incl. caps, bolt connectors, fastening material (FS)

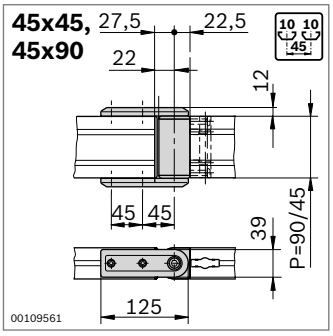

Profile	F, L
	M_{max} = F x L (Nm)
45x45	50
45x90	150

FS1
ISO4762
M6x16
10

Supporting arm joint		p (mm)	ESD	No.	FS
45x45	Standard	45		**3 842 521 263**	4xFS1
	designLINE	45		**3 842 538 694**	4xFS1
45x90	Standard	90		**3 842 521 262**	4xFS1
	designLINE	90		**3 842 538 695**	4xFS1

Material: Standard: diecast zinc
designLINE: painted (RAL 9006)
Cap: PA; black
Fastening material: steel, galvanized
Scope of delivery: Incl. caps, bolt connectors, fastening material (FS)

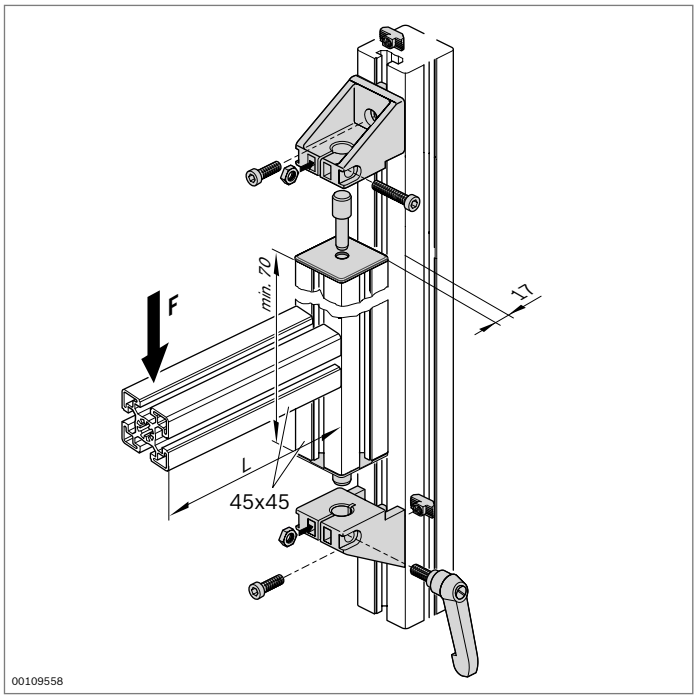

Bearing pedestal

designLINE

- Bearing pedestal for heavy constructions which have to be swiveled
- *designLINE* version with special silver paint (RAL 9006) for a really high-quality design

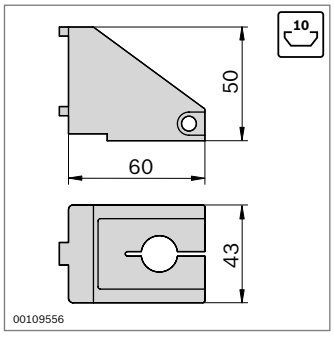

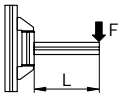

$M_{max} = F_{max}$ **x L** (Nm)
400

FS1

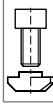

ISO4762
M8x16
10

Bearing pedestal	Slot	No.	FS
Standard	10	**3 842 547 868**	2xFS1
designLINE	10	**3 842 547 869**	2xFS1

Material: Standard: diecast zinc
designLINE: painted (RAL 9006)
Fastening material: steel, galvanized
Clamping lever handle: diecast zinc; black plastic coated
Cap: PA

Scope of delivery: Incl. fastening material (FS), 2 x cap, 2 x bolt, clamping lever (and additional standard parts for clamping the bearing pedestal)

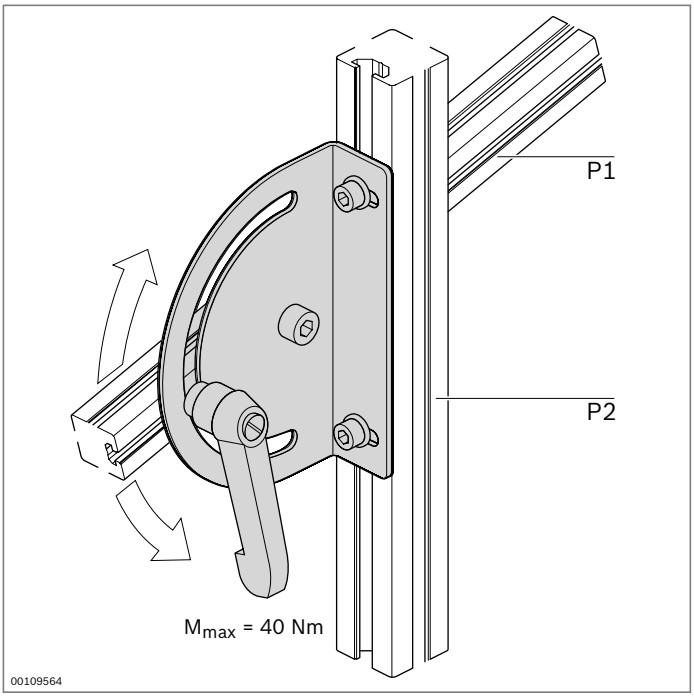

Pivoting fastener, 180°

- Swivel fastening for shelves, etc. which need to be positioned at an angle of ± 90°.

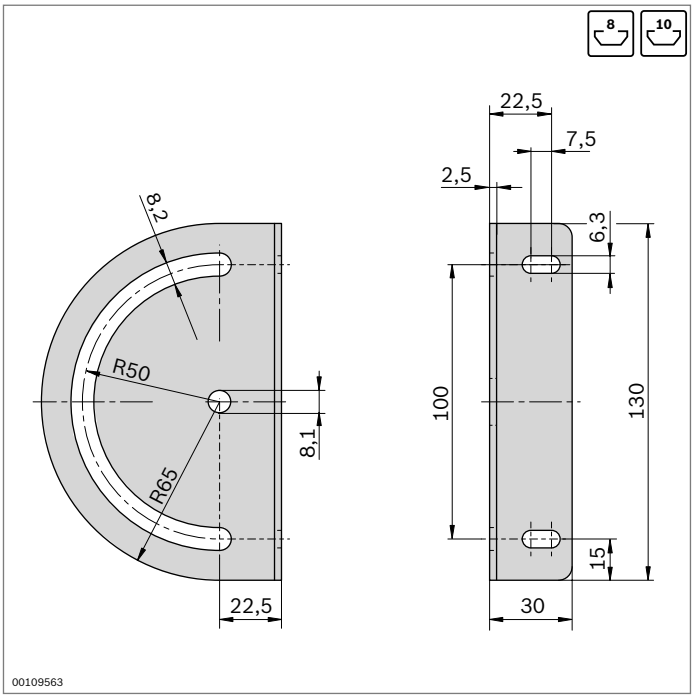

Swivel fastening, 180°	P1 / P2	ESD	No.	FS
	8 / 8 8 / 10		**3 842 538 275**	FS1 2xFS3 2xFS4 2xFS5
	10 / 8 10 / 10		**3 842 538 276**	FS2 2xFS3 2xFS4 2xFS5

Material: Pivoting fastener: steel, galvanized
Clamping lever: diecast zinc; black plastic coated

Scope of delivery: Incl. fastening material (FS), clamping lever with disk and swivel-in sliding block with spring

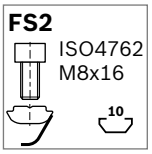

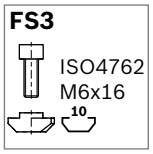

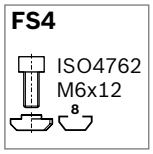

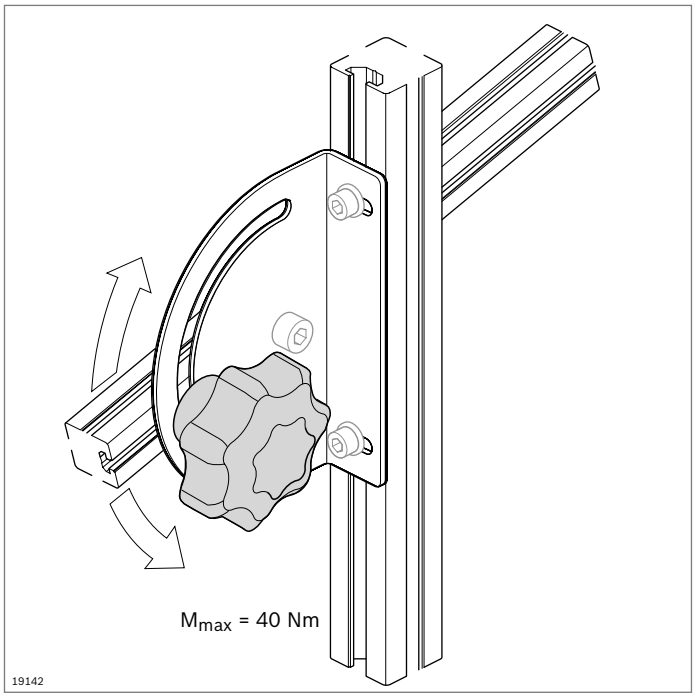

Clamping lever, star knob

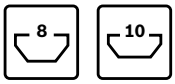

- Clamping elements for adjustable connections

Accessories:
Screws and sliding blocks; see fastening material (p. 4-10)

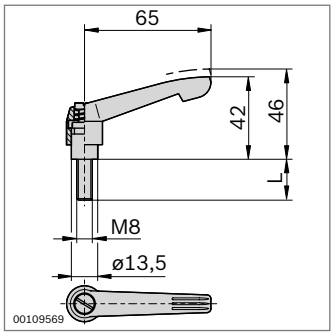

Clamping lever	L (mm)	No.
	12	**3 842 516 845**
	20	**3 842 516 846**
	40	**3 842 516 847**
	45	**3 842 538 607**
	55	**3 842 516 848**

Material: Clamping lever: diecast zinc; black plastic coated
Steel elements: galvanized, strength class 5.8

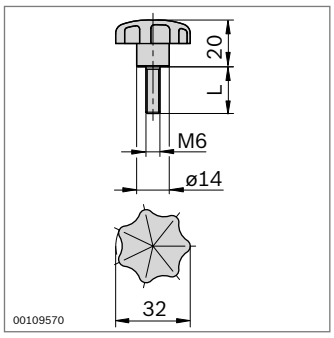

Star knob M6	L (mm)	No.
	15	**3 842 516 849**
	20	**3 842 516 850**

Material: Star knob: PA; black
Steel elements: galvanized, strength class 5.8

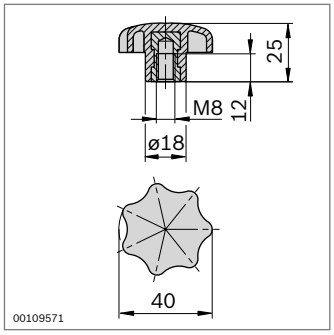

Star knob M8	No.
	3 842 516 851

Material: Star knob: PA; black
Steel elements: galvanized, strength class 5.8

Air-supply elements

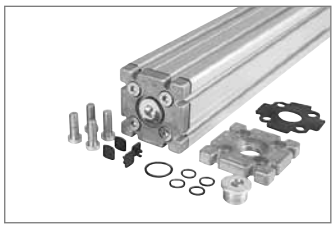

Flanged plate (p. 5-3)

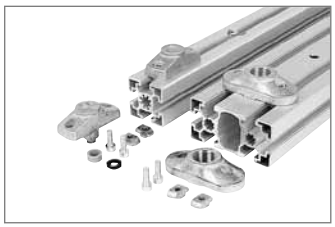

Connection piece (p. 5-4)

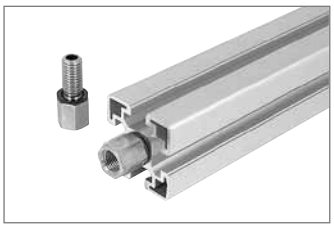

Connection screw fitting M12-1/4" (p. 5-4)

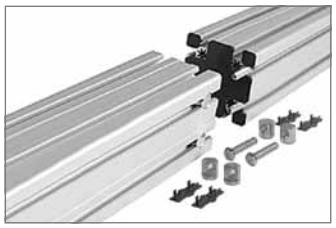

Longitudinal end connector (p. 5-5)

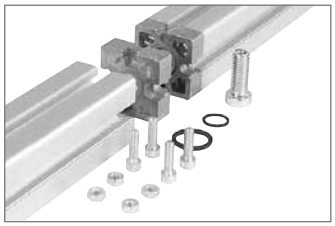

Longitudinal end connector 45 Pneu (p. 5-6)

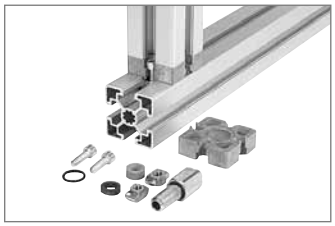

T-connector 45 Pneu (p. 5-6)

45x90
(p. 2-41)

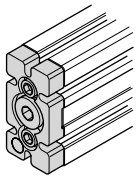

45x90

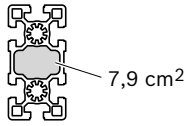

45x90L
45x90L 2N
45x90L 3NVS
(p. 2-40)

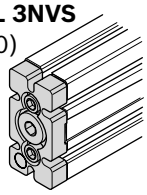

19585

45x90L

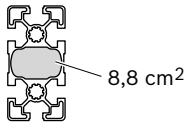

00109731

45x180
(p. 2-41)

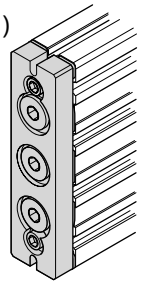

45x180

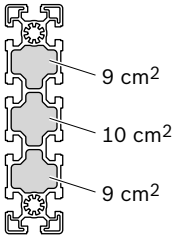

90x90L
90x90L 4N
90x90L 4NVS
(p. 2-43)

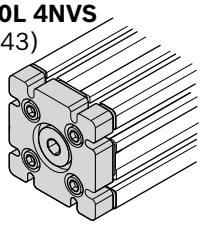

90x90L

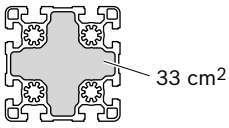

90x180L
(p. 2-45)

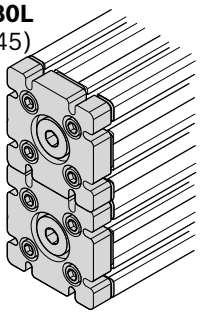

19588

90x180L

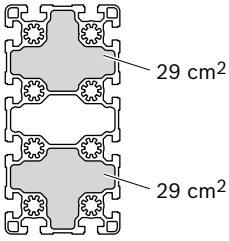

00109734

Air-supply elements

- Rexroth **strut profiles** can be used as compressed-air leads and reservoirs. The hollow chambers or central holes are used
- **Flanged plate** for end closing of profiles (p. 5-3)
- Compressed-air intake or discharge at the flanged plate, **connection piece**, or **connection screw fitting** (p. 5-4)
- Air-tight connecting of profiles with **longitudinal end connectors or T-connectors** (p. 5-6, 5-5)
- The use of the heavy-duty profiles is preferable in the case of more demanding leak-tightness requirements (e.g. for underwater applications)

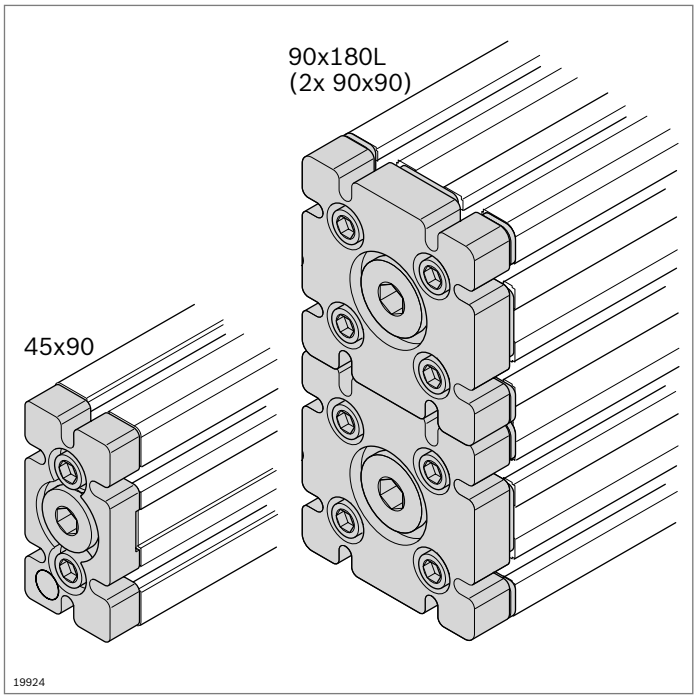

Flanged plate

- For sealing the ends of the hollow chambers. This enables the profiles to be used as a compressed-air lead
- For compressed-air introduction or removal when screw plugs are replaced by pneumatic screw fittings
- Profile machining: M12 thread cutting in the central holes
- For a maximum pressure (p_{max}) of 8 bar

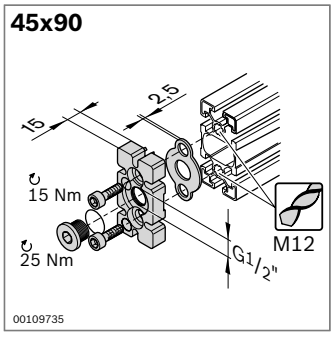

Flanged plate		No.	FS
45x90		**3 842 523 097**	2xFS1
Material:	Flanged plate: diecast aluminum Seal: NBR Fastening material: steel; galvanized		
Scope of delivery:	Incl. fastening material (FS), screw plug, seals		

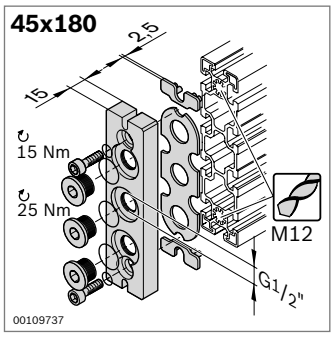

Flanged plate		No.	FS
45x180	2	**3 842 535 721**	2xFS2
Material:	Flanged plate: aluminum Seal: NBR Fastening material: steel; galvanized		
Scope of delivery:	Incl. fastening material (FS), 2 x spacer, 3 x screw plug, seals		

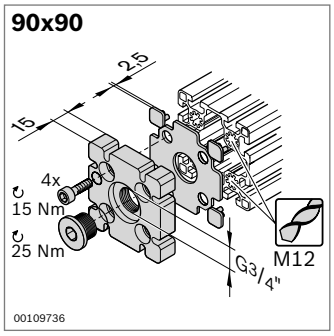

Flanged plate		No.	FS
90x90		**3 842 523 098**	4xFS1
Material:	Flanged plate: diecast aluminum Seal: NBR Fastening material: steel; galvanized		
Scope of delivery:	Incl. fastening material (FS), 4 x spacer, screw plug, seals		

Notice: Only suitable for light profiles 90x90L and 90x180L.

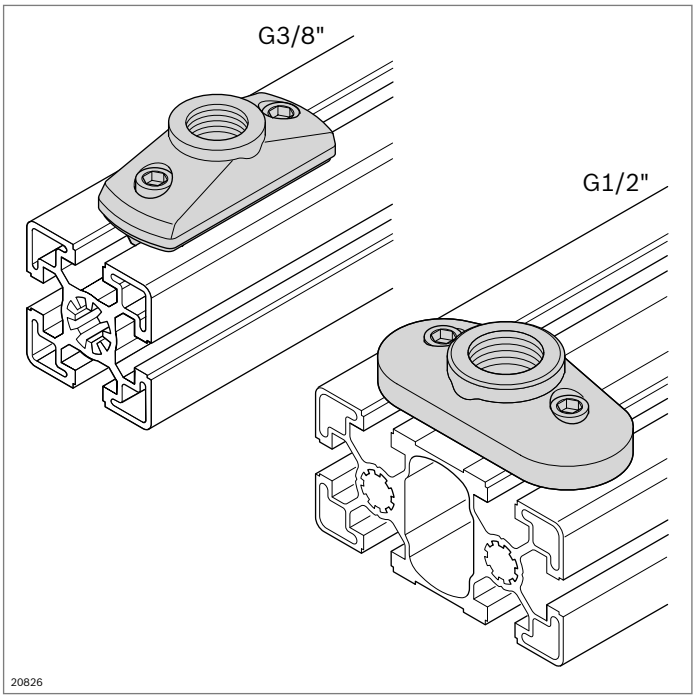

Connection piece
Connection screw fitting M12-1/4"

Connection piece

- For compressed-air intake or discharge at any point on the profile
- G3/8" for connection at central hole
- G1/2" for connection at hollow chamber
- Suitable for light and standard profiles
- Profile machining: blind hole DI9,8; blind hole ø 21 mm (drilling jig **3 842 528 574**, p. 14-3)
- For a maximum pressure (p_{max}) of 8 bar

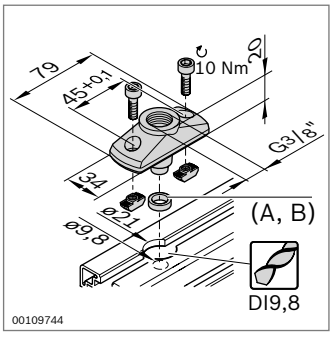

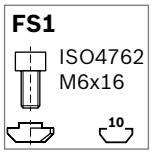

Connection piece		No.	FS
G3/8"		**3 842 523 092**	2xFS1
Material:	Connection piece diecast aluminum Seal: NBR		
Scope of delivery:	Incl. fastening material, seals (**A**, **B**)		
Accessories:	Seals **A**, **B** (p. 5-6)		

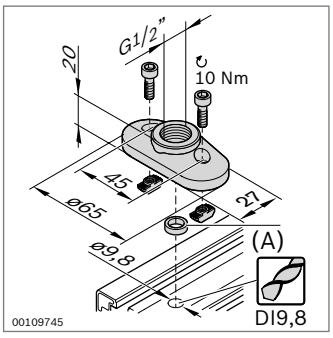

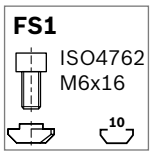

Connection piece		No.	FS
G1/2"		**3 842 352 085**	2xFS1
Material:	Connection piece diecast zinc Seal: NBR		
Scope of delivery:	Incl. fastening material, seal (**A**)		
Accessories:	Seal **A** (p. 5-6)		

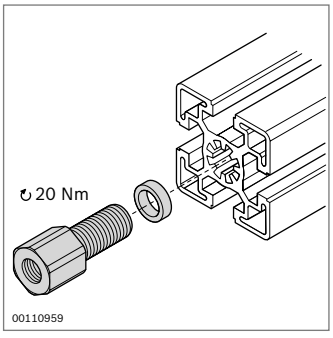

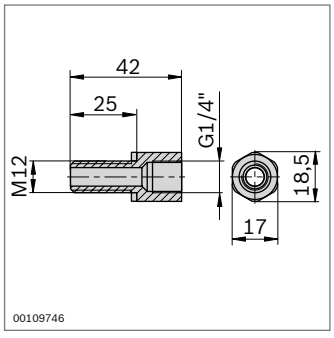

Connection screw fitting M12-1/4"

- For screw fitting in central hole
- Profile machining: M12
- For a maximum pressure (p_{max}) of 8 bar

Connection screw fitting		No.
M12-1/4"	10	**3 842 535 719**
Material:	Connection screw fitting: steel; galvanized Seal: PVC, hard	
Scope of delivery:	Incl. seal	

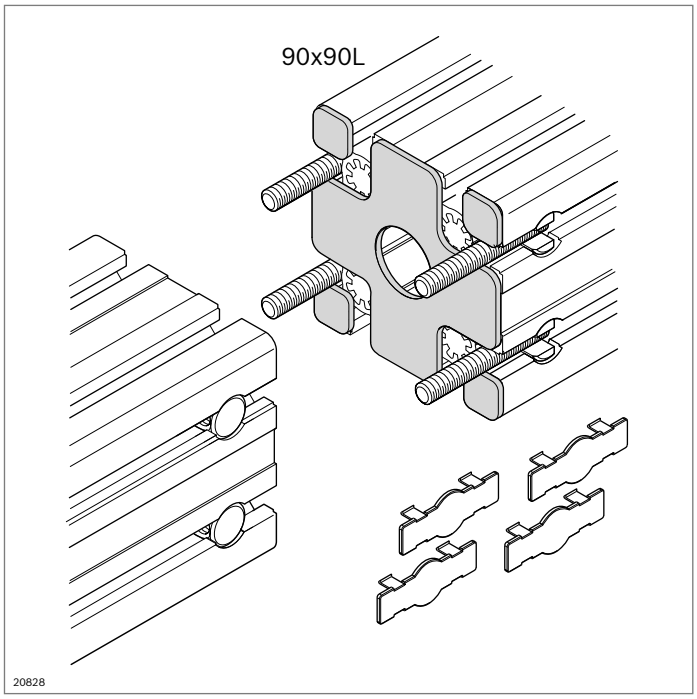

Longitudinal end connection

- Seal for end-to-end connection of profiles carrying compressed air
- Profile machining: through hole D17 (45x90, 45x180); blind hole LF (90x90L)
- For a maximum pressure (p_{max}) of 8 bar

Required accessories:
Longitudinal end connector for profile connection (p. 3-56)

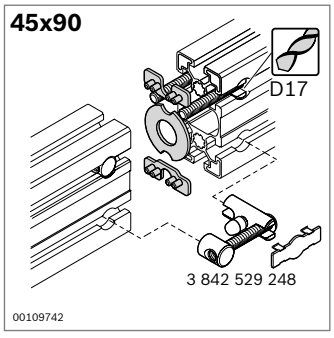

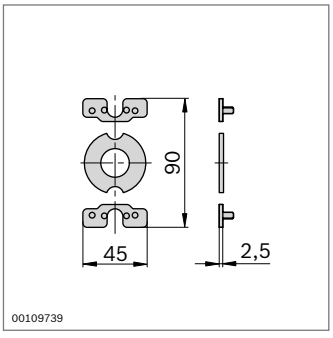

Longitudinal end connection		No.
45x90		**3 842 508 087**
Material:	Seal: PUR Spacer: PA	
Scope of delivery:	Seal, 2 x spacer	

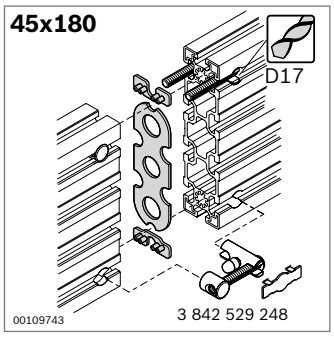

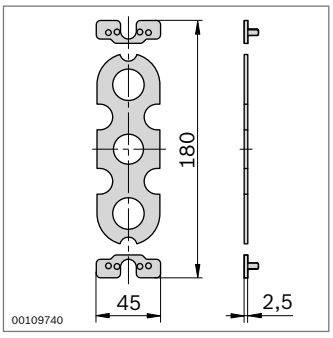

Longitudinal end connection		No.
45x180		**3 842 508 088**
Material:	Seal: NBR Spacer: PA	
Scope of delivery:	Seal, 2 x spacer	

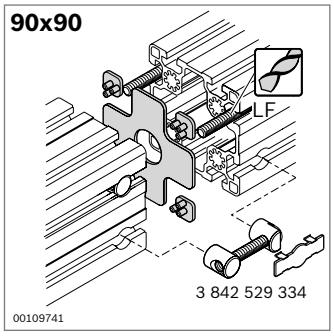

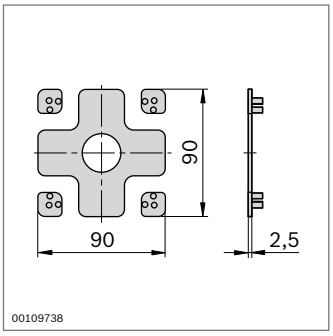

Longitudinal end connection		No.
90x90		**3 842 510 145**
Material:	Seal: NBR Spacer: PA	
Scope of delivery:	Seal, 4 x spacer	

Note: Only suitable for light profile 90x90L.

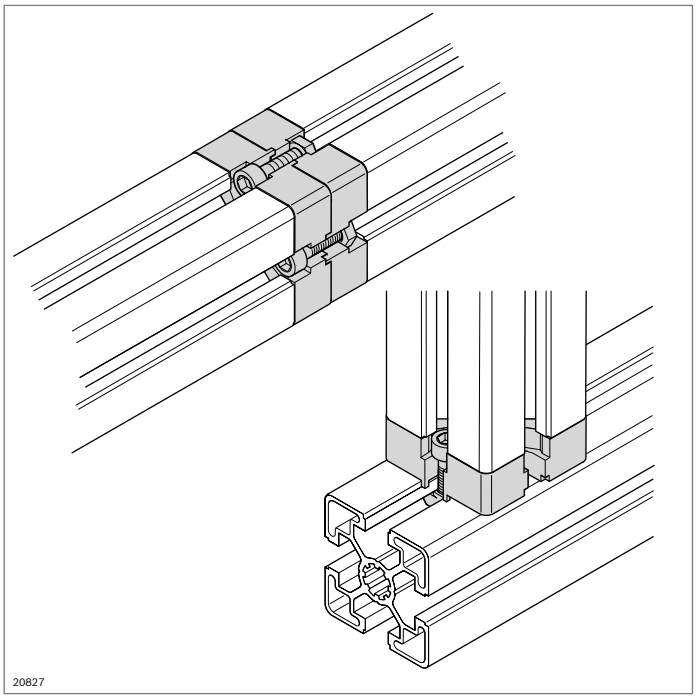

Longitudinal end connector 45 Pneu
T-connector 45 Pneu, seal

- Longitudinal end connector 45 Pneu for end face mechanical and pneumatic connections of two 45x45 or 45x45L profiles to convert the central bore into a compressed-air line
- T-connector 45 Pneu for mechanical and pneumatic connections of two 45x45 or 45x45L profiles at a 90° angle to convert the central bore into a compressed-air line
- Profile machining: M12 in central bore; blind hole DI9.8; blind hole ø 21 mm (drilling jig **3 842 528 574**, p. 14-3)
- For a maximum pressure (p_{max}) of 8 bar

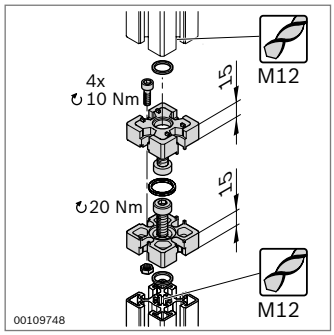

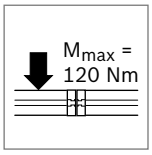

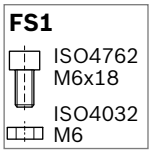

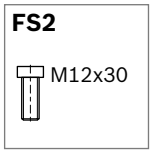

Longitudinal end connector	No.	FS
45 Pneu	**3 842 523 094**	4xFS1, 2xFS2

Material: Longitudinal end connector: diecast aluminum
Seal: NBR
Scope of delivery: Incl. fastening material, sealing rings

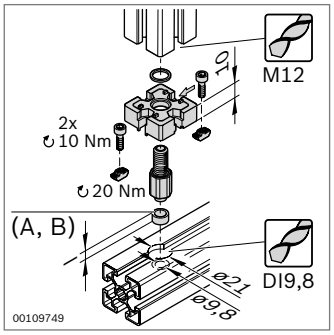

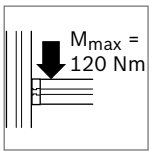

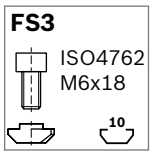

T-connector	No.	FS
45 Pneu	**3 842 523 093**	2xFS3

Material: T-connector: diecast aluminum
Seal: NBR
Scope of delivery: Incl. fastening material, seals (**A**, **B**) for standard and light profiles

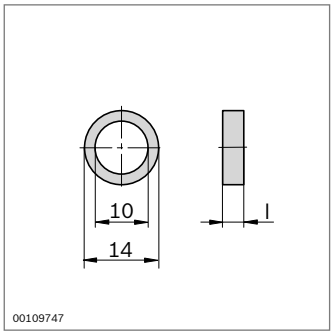

- Seal for connection piece and T-connector

Seal		l (mm)		No.
A	For standard profiles	4	10	**3 842 503 242**
B	For light profiles	7	10	**3 842 523 102**

Material: NBR

Feet and wheels

Modular leveling feet (p. 6-2)

Leveling foot, foot, damping ring (p. 6-4)

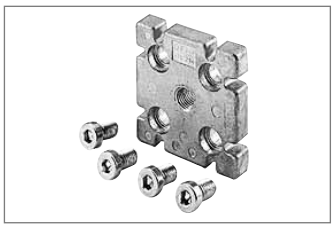

Plate (p. 6-6)

Base plate, steel (p. 6-8)

Base plate (p. 6-8)

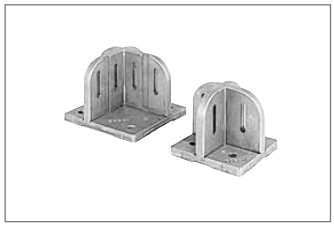

Base plate (p. 6-11)

Foot (p. 6-12)

Foot, stainless steel (p. 6-14)

Double wheel (p. 6-16)

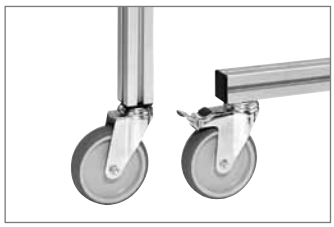

Roller (p. 6-17)

Heavy-duty wheel (p. 6-20)

Lifting wheel (p. 6-22)

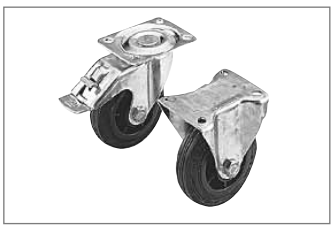

Roller with mounting flange (p. 6-23)

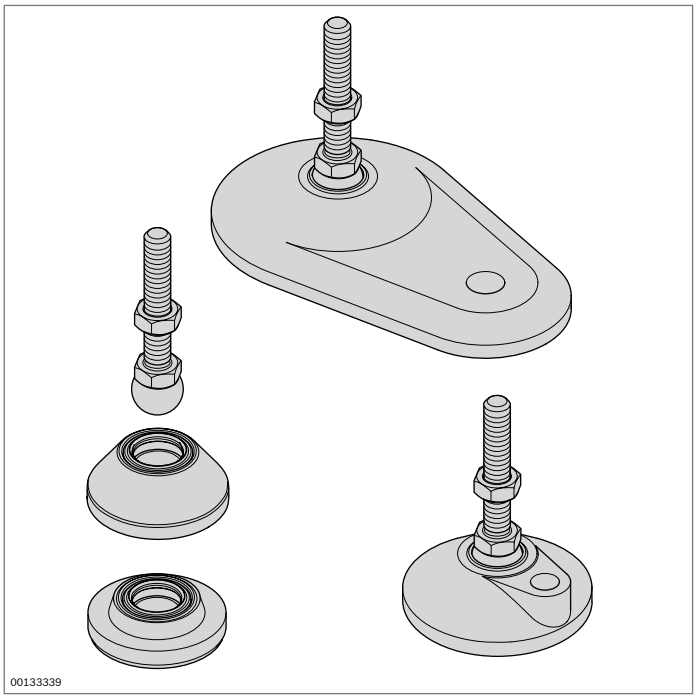

Modular leveling feet

- Leveling feet for compensating irregularities in the floor up to 10°
  - Modular system, various combinations possible
  - Spindles and base plates can be combined as desired
  - Base plates with screw hole for simple screw fitting to the floor
- The damping plate prevents the transfer of vibrations and allows a defined conduction of voltages via a set of grounding components (p. 17-2)
- Profile machining: thread M in central hole

Accessories: bearing ring (p. 6-16)

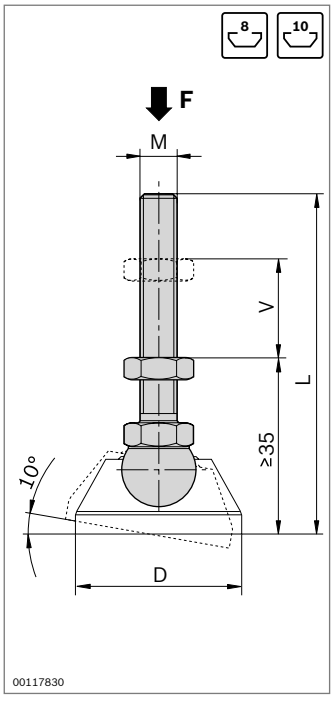

Shaft	F (N)	M	L (mm)	V (mm)	ESD		No.
Stainless steel	10000	M8	75	20		20	**3 842 536 811**
	20000	M12	85	30		20	**3 842 536 812**
	20000	M12	145	80		20	**3 842 537 223**
	20000	M12	200	135		20	**3 842 537 225**
	30000	M16	85	20		20	**3 842 537 227**
	30000	M16	145	80		20	**3 842 537 229**
	30000	M16	200	135		20	**3 842 537 231**
Steel, galvanized	10000	M8	75	20		20	**3 842 537 220**
	20000	M12	85	30		20	**3 842 537 222**
	20000	M12	145	80		20	**3 842 537 224**
	20000	M12	200	135		20	**3 842 537 226**
	30000	M16	85	20		20	**3 842 537 228**
	30000	M16	145	80		20	**3 842 537 230**
	30000	M16	200	135		20	**3 842 537 232**

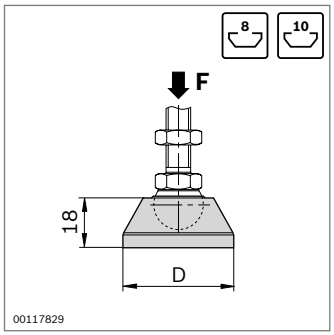

Base plate	F (N)	D (mm)	ESD		No.
Stainless steel	20000	29		20	**3 842 536 694**
	30000	39		20	**3 842 536 695**
	30000	44		20	**3 842 536 696**
	30000	59		20	**3 842 538 673**
	30000	79		20	**3 842 537 206**
Diecast zinc, black powder coating	20000	29		20	**3 842 538 674**
	30000	39		20	**3 842 538 675**
	30000	44		20	**3 842 538 676**
	30000	59		20	**3 842 538 677**
	30000	79		20	**3 842 538 678**
PA; black	5000	29		20	**3 842 538 832**
	9000	39		20	**3 842 538 833**
	9000	44		20	**3 842 538 834**
	9000	59		20	**3 842 538 835**
	9000	79		20	**3 842 538 836**

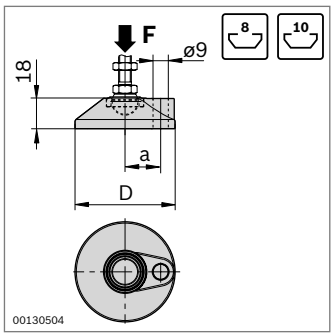

Base plate with screw hole	F (N)	D (mm)	a (mm)		No.
	30000	59	21	20	**3 842 538 932**
	30000	79	31	20	**3 842 538 934**

Material: diecast zinc, black powder coating

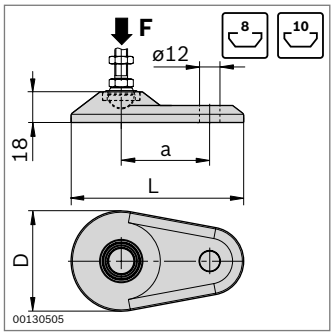

Oval base plate with screw hole	F (N)	D (mm)	a (mm)	L (mm)		No.
	30000	59	52	100	20	**3 842 538 679**
	30000	79	65	130	20	**3 842 538 680**

Material: diecast zinc, black powder coating

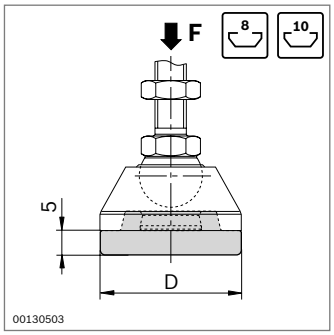

Damping plate	F (N)	D (mm)		No.
	1100	29	20	**3 842 538 555**
	1600	39	20	**3 842 538 556**
	2000	44	20	**3 842 538 557**
	2500	59	20	**3 842 538 558**
	2800	79	20	**3 842 538 559**

Material: PUR, black

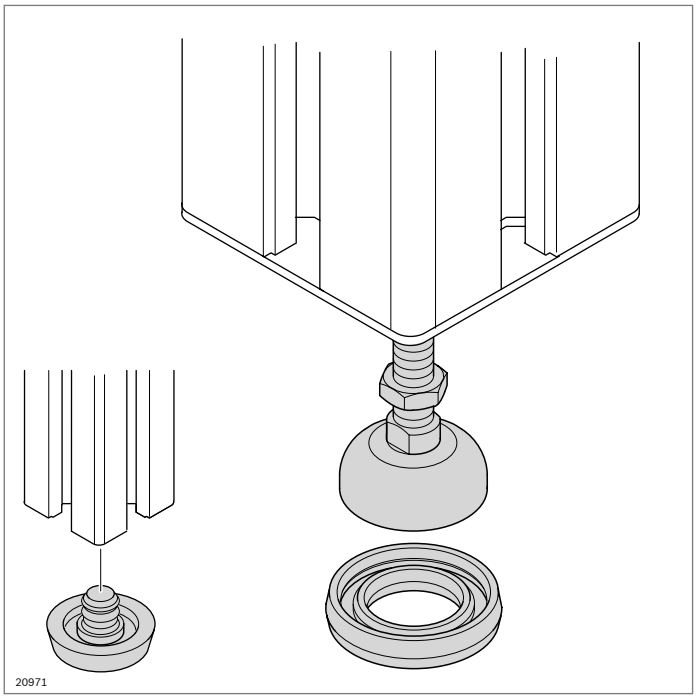

Leveling foot, foot, damping ring

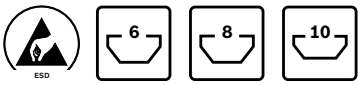

Leveling foot

- For compensating irregularities in the floor up to 5°
- Fully assembled spindle and base plate
- Profile machining: threading in central hole

Damping ring

- The electrically insulating damping ring prevents the transfer of vibrations and allows a defined conduction of voltages via a set of grounding components (p. 17-2)

Accessories:
bearing ring (p. 6-16); for when cover caps with a hole are used

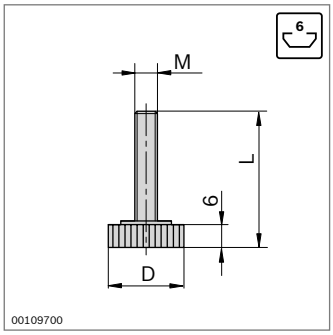

Leveling foot	M	D (mm)	L (mm)		No.
	M6	20	41	20	**3 842 518 743**

Material: steel/plastic

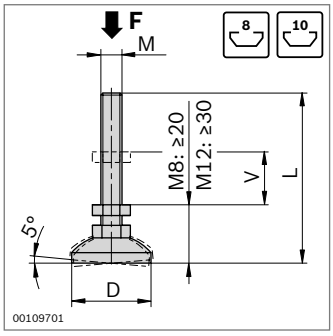

Leveling foot	F (N)	M	D (mm)	L (mm)	V (mm)	ESD		No.
	5000	M8	30	65	15		20	**3 842 502 257**
	8000	M12	30	72	14		20	**3 842 529 025**

Material: steel, galvanized

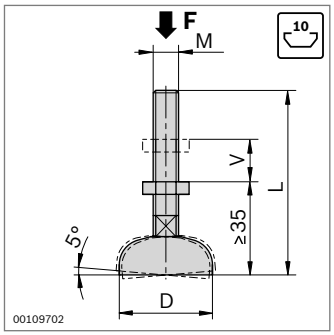

Leveling foot	F (N)	M	D (mm)	L (mm)	V (mm)	ESD		No.
	10000	M12	44	85	30		20	**3 842 352 061**
	20000	M16	44	145	80		20	**3 842 311 956**
	10000	M12	44	160	80		20	**3 842 536 470**
	10000	M12	58	85	30		20	**3 842 511 893**
	20000	M16	90	85	20		20	**3 842 311 950**
	20000	M16	90	145	80		20	**3 842 311 951**
	20000	M16	90	200	135		20	**3 842 527 186**

Material: steel, galvanized

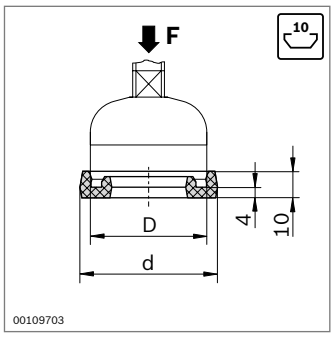

Damping ring	F (N)	D (mm)	d (mm)		No.
	1600	30	39	20	**3 842 529 024**
	2000	44	52	20	**3 842 521 817**
	2500	58	66	20	**3 842 522 301**
	3000	90	98	20	**3 842 522 303**

Material: PUR; natural, hardness: shore A 70-80

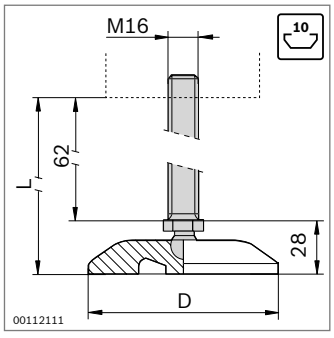

Leveling foot	M	D (mm)	L (mm)	V (mm)		No.
	M16	80	95	62	1	**3 842 533 310**

Material: Shaft: stainless steel
Base plate: PA

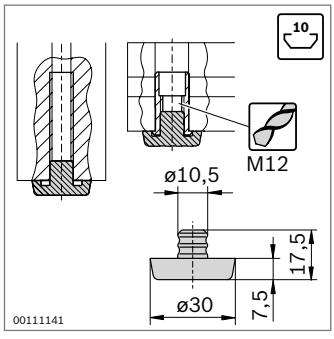

Foot		No.
	100	**3 842 514 568**

Material: TPE, black

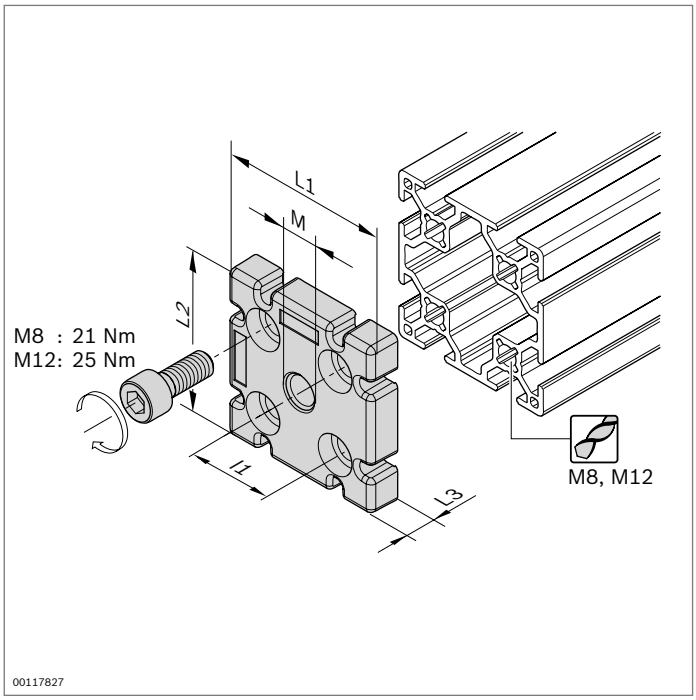

Plate

- For fastening leveling feet in profiles without a central hole
- For use as an end connector or T-connector
- Profile machining: tapping of thread in the central hole

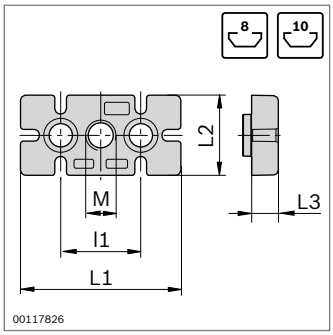

Plate	F (N)	M	L1 (mm)	l1 (mm)	L2 (mm)	L3 (mm)	No.	FS
30x60	8000	M12	60	30	30	11	**3 842 536 560**	2xFS1
40x80	10000	M12	80	40	40	15	**3 842 536 562**	2xFS2
45x90	20000	M16	90	45	45	15	**3 842 536 564**	2xFS2

Material: Plate: diecast aluminum
Fastening material: steel, galvanized
Scope of delivery: Incl. fastening material (FS)

FS1

DIN 7984
M8x20

FS2

DIN 7984
M12x20

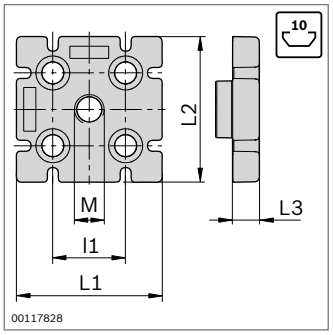

Plate	F (N)	M	L1 (mm)	l1 (mm)	L2 (mm)	L3 (mm)	No.	FS
60x60 8N	10000	M12	60	30	60	11	**3 842 536 566**	4xFS1
80x80L	10000	M12	80	40	80	15	**3 842 529 416**	4xFS2
90x90L	20000	M16	90	45	90	15	**3 842 511 352**	4xFS2
100x100L	20000	M16	100	50	100	15	**3 842 529 417**	4xFS2

Material: Plate: diecast aluminum
Fastening material: steel, galvanized
Scope of delivery: Incl. fastening material (FS)

FS1

DIN 7984
M8x20

FS2

DIN 7984
M12x20

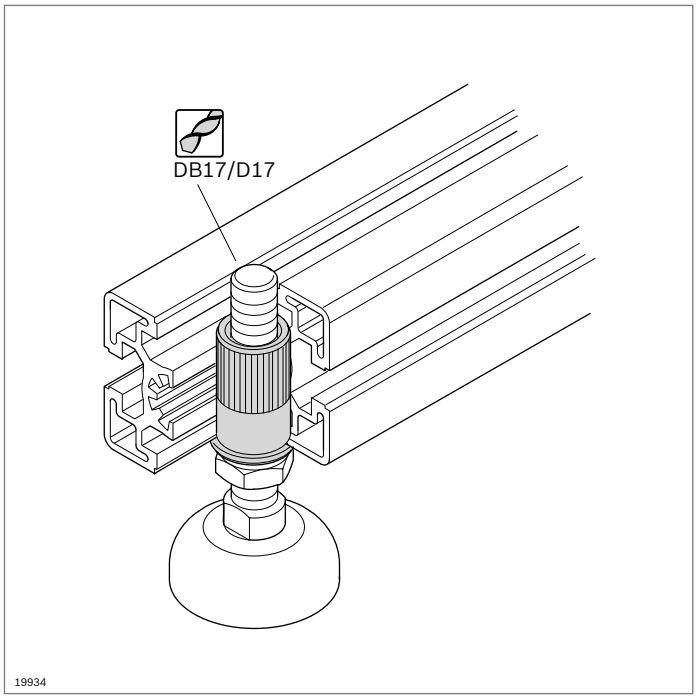

Threaded sleeve

- For fastening leveling feet at an angle to the longitudinal profile direction
- Profile machining:
  - drilling of blind hole DB17
  - drilling of through-hole D17

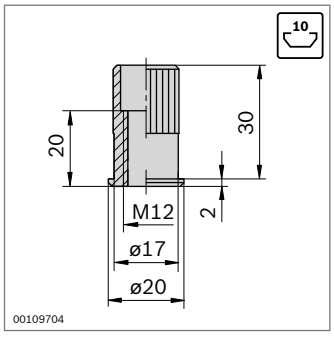

Threaded sleeve		No.
		3 842 504 790
Material:	Steel, galvanized	

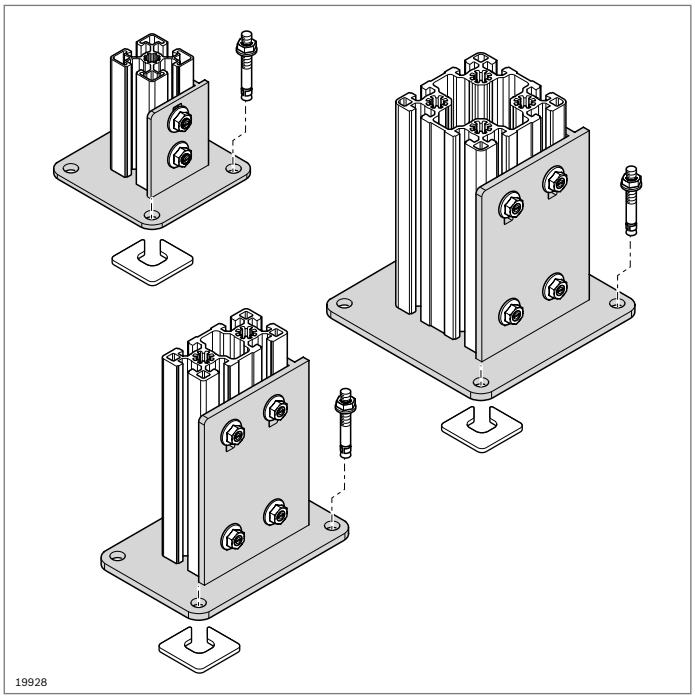

Base plate, steel

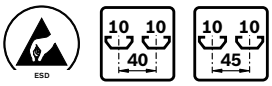

- Used in construction for supporting separating and protective walls
- Profile machining: not required

Accessories:

- T-bolt M8x20, 10 mm slot (p. 3-6)
- Flange nut M8 (p. 3-6)
- Floor dowel **3 842 526 561** (p. 6-12)
- Washer (p. 6-13)

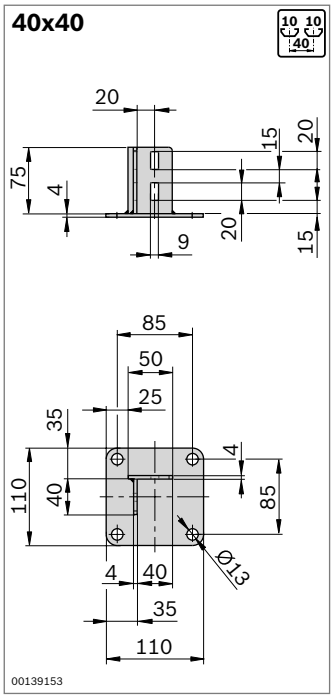

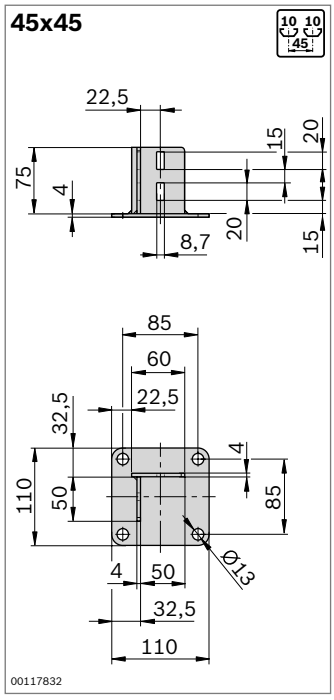

Base plate, steel	ESD	No.
40x40	ESD	**3 842 542 667**
45x45	ESD	**3 842 536 581**

Material: Steel, galvanized

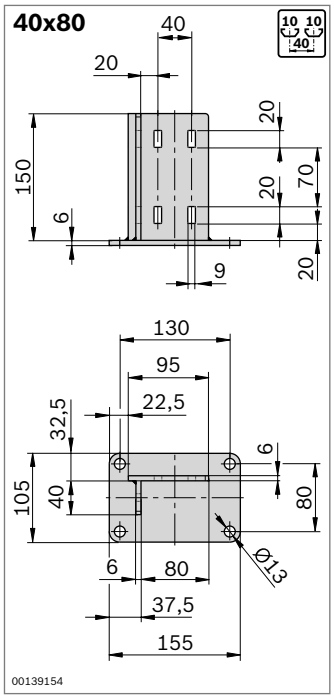

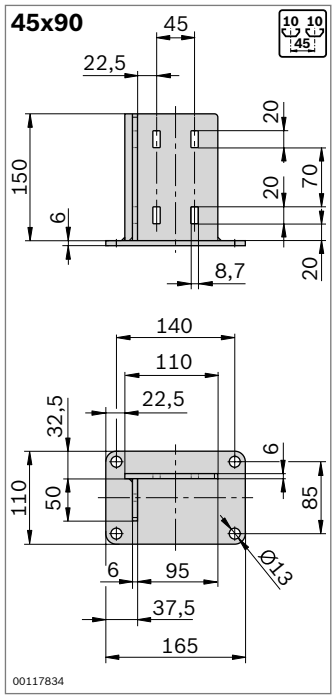

Base plate, steel	ESD	No.
40x80	⚠	**3 842 542 668**
45x90	⚠	**3 842 536 207**

Material: Steel, galvanized

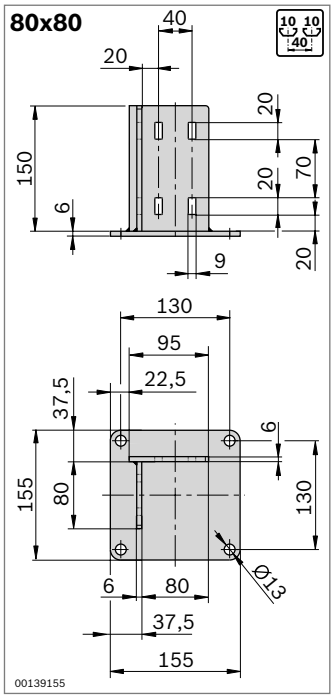

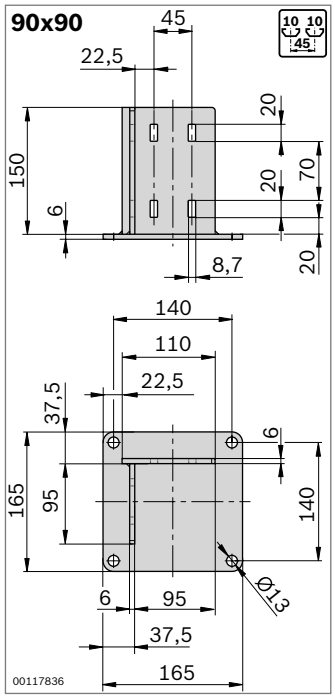

Base plate, steel	ESD	No.
80x80	⚠	**3 842 542 669**
90x90	⚠	**3 842 536 746**

Material: Steel, galvanized

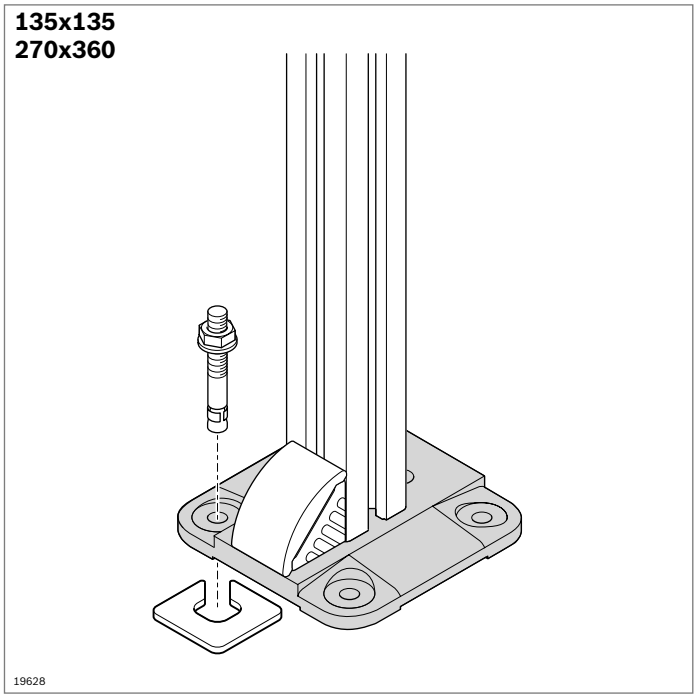

Base plate 135x135, 270x360

- Used in construction for supporting separating and protective walls
- Anchoring with floor dowel

Required accessories:
Bracket (p. 3-17)

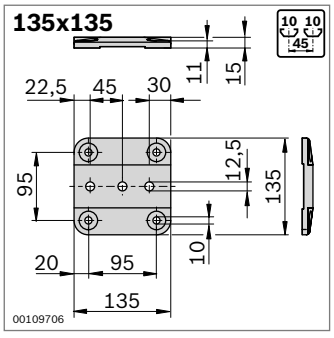

Base plate	ESD	No.
135x135	ESD	**3 842 516 175**
Material:	Diecast aluminum	

Accessories, required:
- floor dowel **3 842 526 560** (p. 6-12)
- washer (p. 6-13)

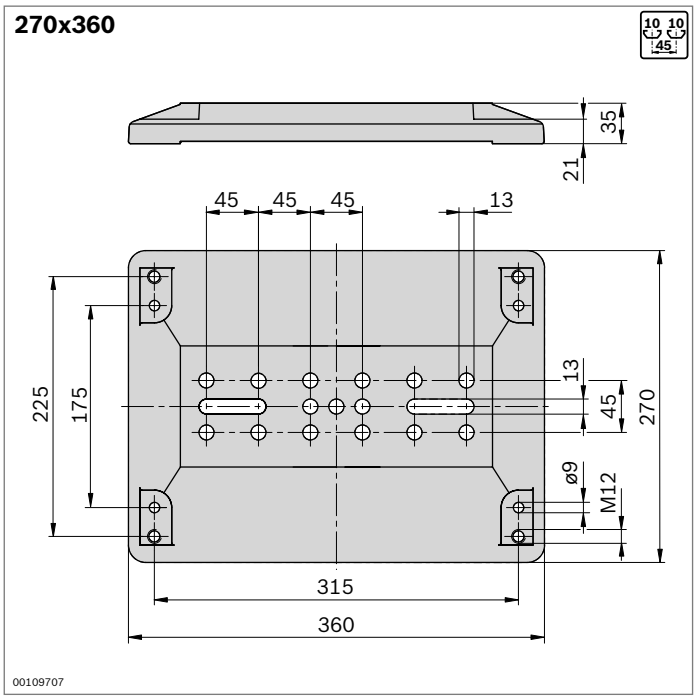

Base plate	No.
270x360	**3 842 514 567**
Material:	Gray cast iron, painted black

Accessories, required:
- floor dowel **3 842 540 668** (p. 6-12)
- washer (p. 6-13)

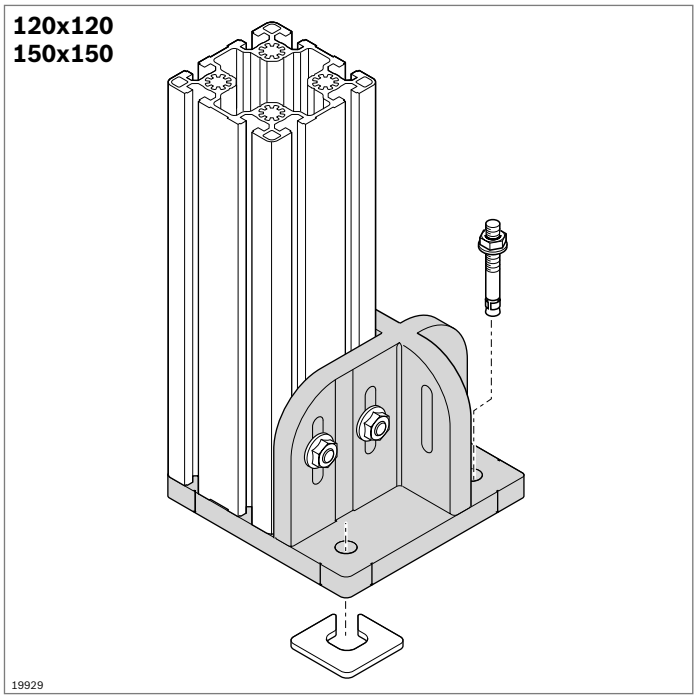

Base plate 120x120, 150x150

- For flush mounting of supports. No danger of tripping!
- Markings arranged at the center of the profile for precise alignment
- Anchoring with floor dowel

Accessories, required:

- T-bolt M8x30 **3 842 528 721** (p. 3-6)
- Flange nut M8, **3 842 345 081** (p. 3-6)
- Floor dowel **3 842 526 561** (p. 6-12)
- Washer (p. 6-13)

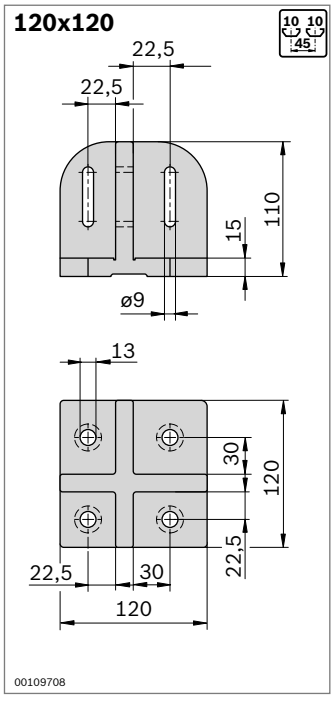

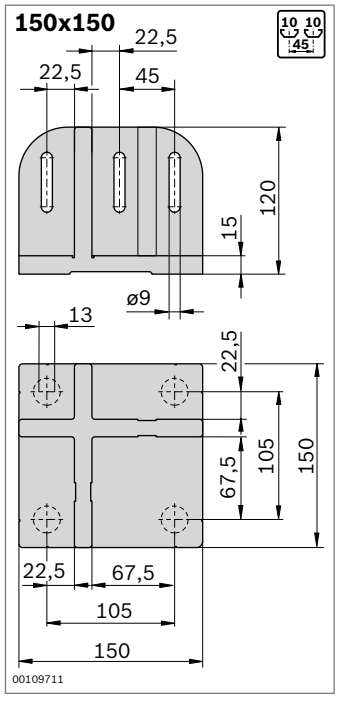

Base plate	ESD	No.
120x120	⚠	**3 842 527 553**
150x150	⚠	**3 842 524 469**

Material: Diecast aluminum

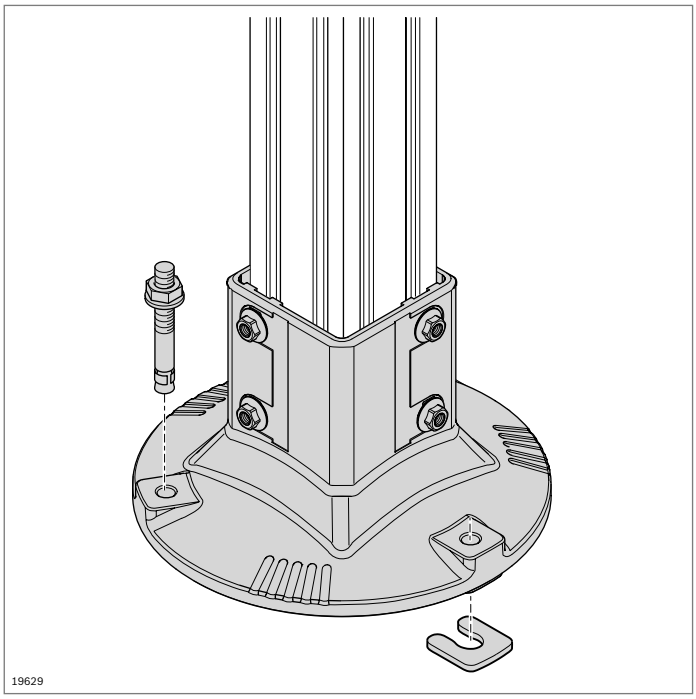

Foot
Floor dowel, washer

Foot

- For constructing supports made of 80x80L and 60x60 profiles
- Large standing surface for high stability
- Easy cleaning thanks to few horizontal surfaces
- Open on the inside to enable draining of liquids
- Stop as depth limit for profile (removable)

Required accessories:

- floor dowel **3 842 540 668**
- washer **3 842 546 717** or **3 842 546 718**

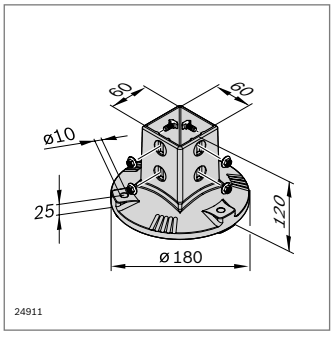

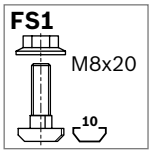

Foot, AL		No.	FS
60x60	1	**3 842 544 875**	4xFS1

Material: Aluminum, silver coating (RAL 9006)
Fastening material: steel, galvanized
Scope of delivery: Incl. fastening material (FS1)

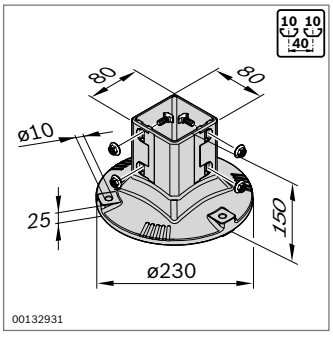

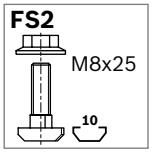

Foot		No.	FS
80x80		**3 842 540 173**	4xFS2

Material: Aluminum, silver coating (RAL 9006)
Fastening material: steel, galvanized
Scope of delivery: Incl. fastening material (FS1)

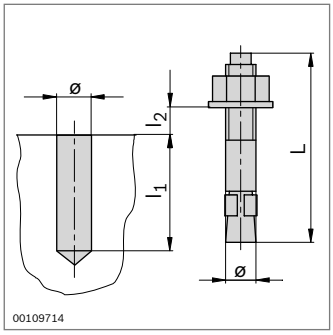

Floor dowel

- For anchoring the base plates

Floor dowel	ø	L (mm)	l_1 (mm)	$l_{2\,max}$ (mm)		No.
	8	80	65	15	100	**3 842 526 560**
	10	90	70	15	100	**3 842 526 561**
	8	95	65	30	100	**3 842 540 668**

Material: Steel, galvanized

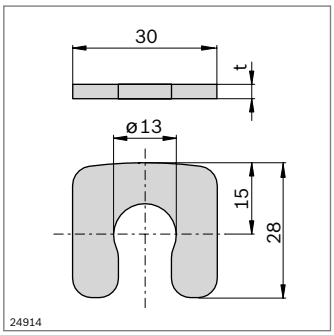

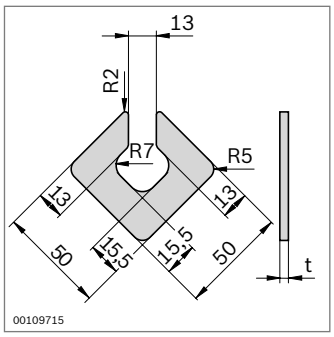

Washer

▶ For leveling in case of uneven flooring

Washer	t (mm)		No.
for round feet	1	100	**3 842 546 717**
	3	100	**3 842 546 718**

Material: Steel; stainless

Washer	t (mm)		No.
for square feet	1	100	**3 842 528 189**
	4	100	**3 842 528 191**

Material: Steel; stainless

6

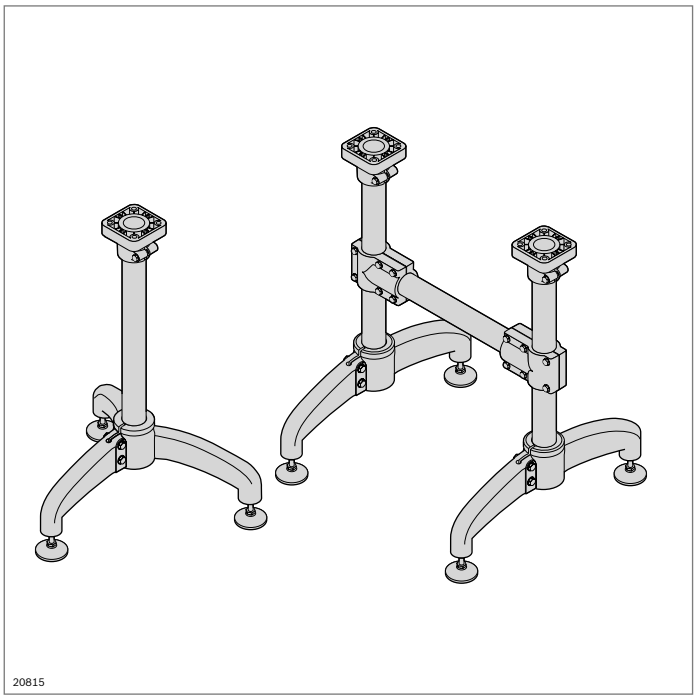

Foot, stainless steel

- Components for constructing feet and frames using the stainless steel tube D 48.3
- Tube fastened by clamping
- Shaft thread M16

Accessories, optional:
leveling foot **3 842 533 310** (p. 6-4)

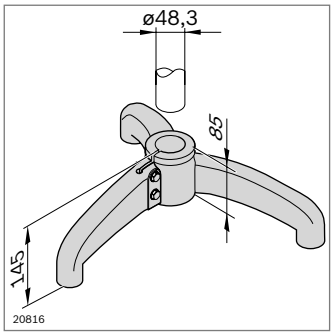

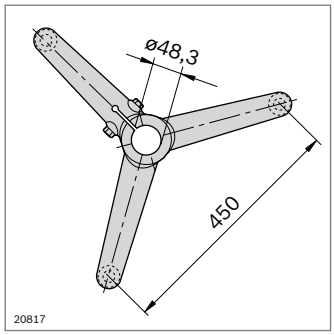

Foot		No.
Tripod		**3 842 533 307**
Material:	Foot: stainless steel Fastening material: stainless steel	

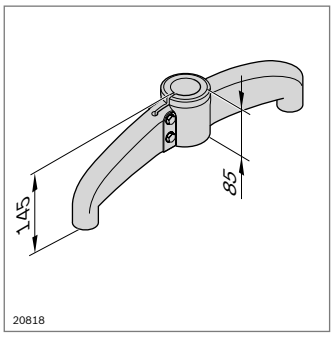

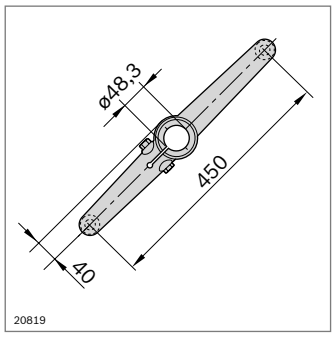

Foot		No.
Bipod		**3 842 533 308**
Material:	Foot: stainless steel Fastening material: stainless steel	

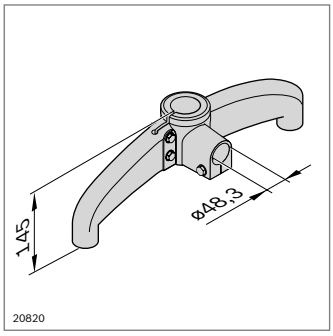

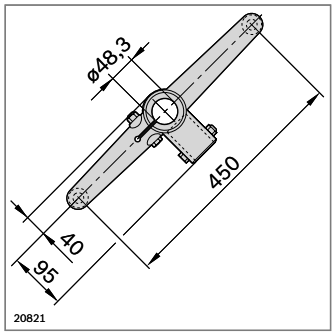

Foot		No.
Bipod with flange		**3 842 533 309**
Material:	Foot: stainless steel Fastening material: stainless steel	

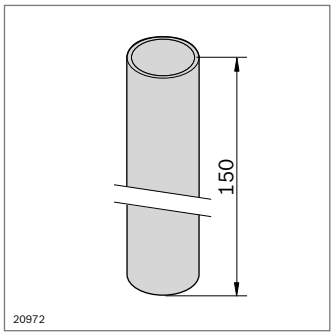

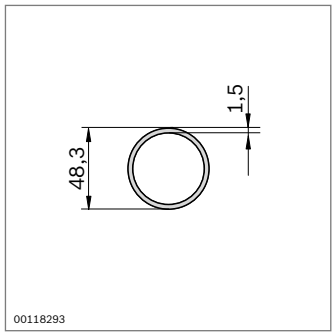

Tube D 48.3		**L** (mm)	**No.**
1 pc		200 ... 3000	**3 842 993 308 / L**
6 pcs		3000	**3 842 533 901**

Material: stainless steel

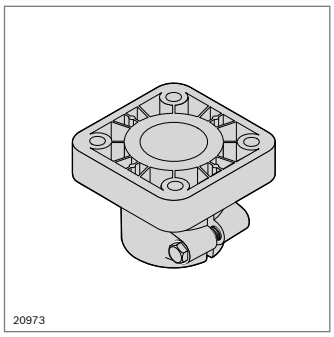

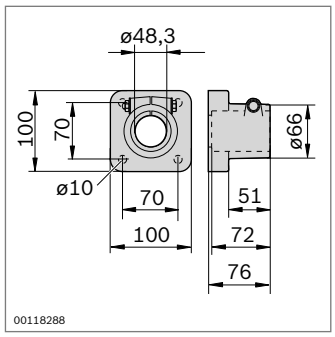

Flange	**No.**
	3 842 533 305

Material: Flange: PA
Fastening material: stainless steel

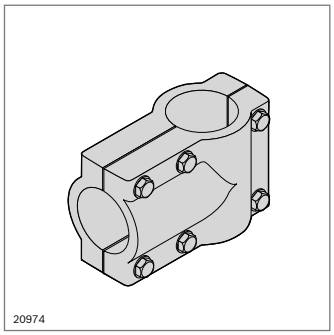

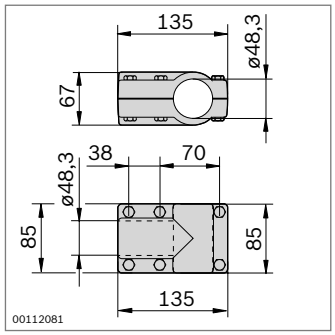

Cross connectors	**No.**
	3 842 533 306

Material: PA
Fastening material, adjustment screw: stainless steel

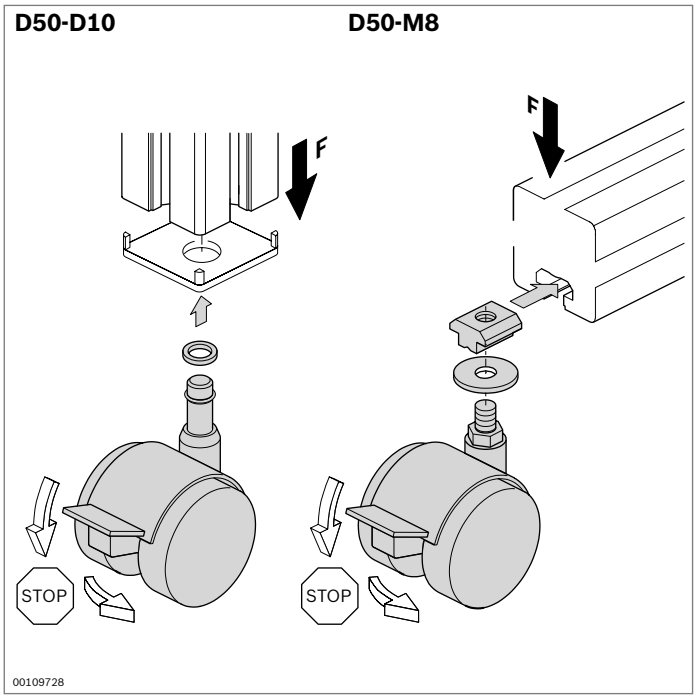

Double wheel

- Attractive double wheel for light applications
- Made of oil-resistant material
- Double wheel with lock
- Double wheel D50-D10 for insertion in the central hole with a diameter of 10 mm
- Double wheel D50-M8 for bolting in the profile slot

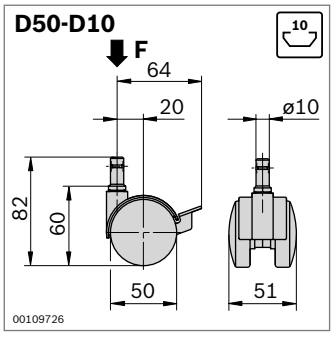

Double wheel	F (N)	ESD		No.
D50-D10	400		4	**3 842 515 457**
	400	[1]	4	**3 842 515 459**

[1] Conduction resistance ≤ 10^6 Ω

Material: Housing, wheel, lock: PA
Running surface: PU (ESD version only)
Fastening material: steel, galvanized

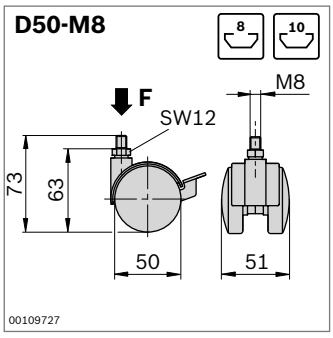

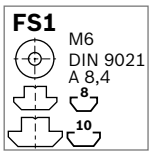

Double wheel	F (N)	ESD		No.	FS
D50-M8	400		4	**3 842 535 669**	FS1
	400	[1]	4	**3 842 535 670**	FS1

[1] Conduction resistance ≤ 10^6 Ω

Material: Housing, wheel, lock: PA
Running surface: PU (ESD version only)
Fastening material: steel, galvanized

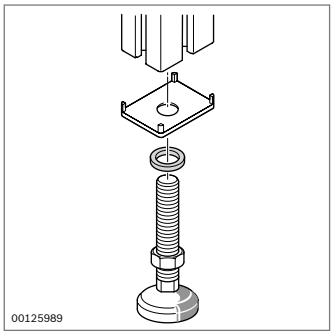

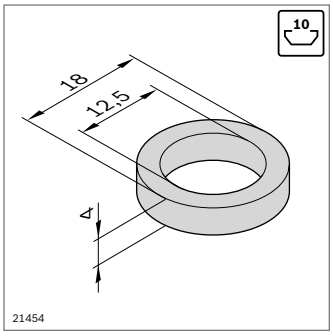

Bearing ring

- For caps with hole
- For M12 threads
- To protect the caps when tightening accessories

Bearing ring		No.
	100	**3 842 536 321**

Material: Stainless steel

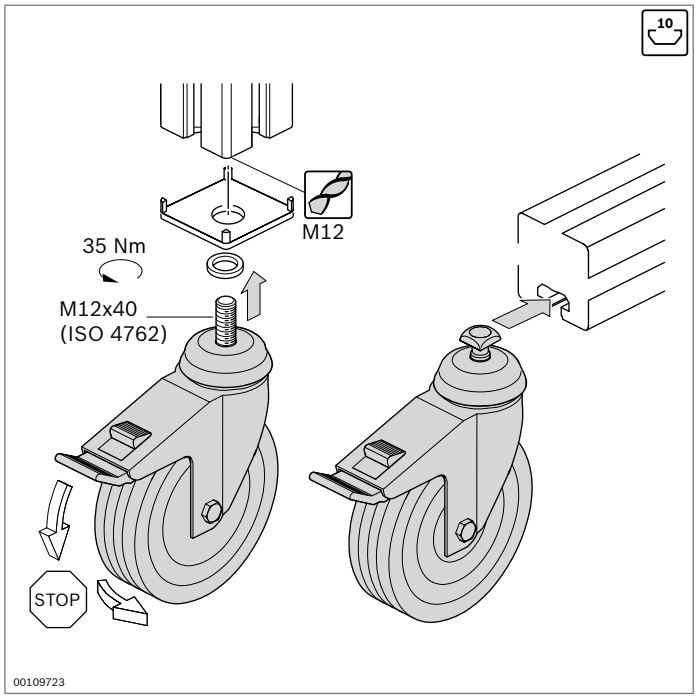

Wheel

- Versatile range of uses
- Rollers with excellent running properties
- Available as a caster wheel with lock, caster, and trestle wheel

Especially gentle on floors

Resistant to oil, suitable for workshop floors

Suitable for use in cleanrooms. Conductive material version in accordance with DIN EN 61340-5-1; conduction resistance 10^3 to 10^8 Ω

Rubber running surface made of solid rubber with good deformation elasticity. No permanent flattening of the wheel due to it traveling over edges or not being moved for long periods

Suitable for ESD-sensitive areas. Conductive material version in accordance with DIN EN 61340-5-1; conduction resistance ≤ 10^6 Ω

- Mounting of all rollers in the profile slot or central hole (accessories required)
- Profile machining: thread cutting M12 for assembly in central hole

Accessories, required:

- Screw M12x40 (ISO 4762) for mounting in central hole (↻ 35 Nm)
- Bearing ring if cap with hole is used (p. 6-16)

Wheel selection guide

Tread	**Thermoplastic rubber**	**Polyamide 6**	**Solid rubber**	**Polyurethane**
ESD	yes / no (either possible)	no	yes	yes
Tread hardness	85° shore A	70° shore D	80° shore A	94° shore A
Temperature resistance	–20 °C ... +60 °C	–25 °C ... 80 °C	–20 °C ... +60 °C	–20 °C ... +60 °C
Rolling resistance	very good	outstanding	good	very good
Travel noise	good	satisfactory	very good	good
Floor protection	good	satisfactory	very good	good
Deformation elasticity of tread	satisfactory	adequate	very good	good
Tread color	gray	black	black	gray
Makes no track marks	yes	yes	no	yes

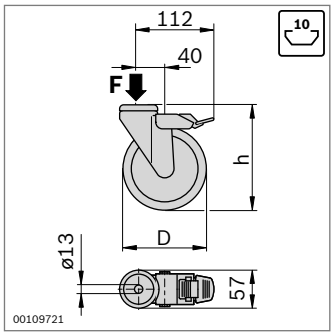

▶ Steerable castor with lock: lock prevents the wheel from rolling or turning

Caster wheel with lock	F (N)	D (mm)	h (mm)	ESD	No.	FS
	900	80	108		**3 842 541 226**	FS1
	1100	125	158		**3 842 541 228**	FS1
	900	80	108	ESD	**3 842 541 230**	FS1
	1100	125	158	ESD	**3 842 541 232**	FS1
	1100	125	158		**3 842 515 367**	FS1
Clean Room	1000	125	158	ESD	**3 842 524 499**	FS1
	600	80	108	ESD	**3 842 547 836**	FS1
	800	125	158	ESD	**3 842 547 838**	FS1

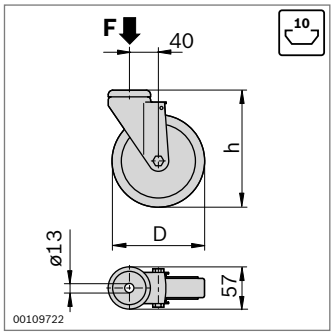

Caster wheel	F (N)	D (mm)	h (mm)	ESD	No.	FS
	900	80	108		**3 842 541 234**	FS1
	1100	125	158		**3 842 541 236**	FS1
	900	80	108	ESD	**3 842 541 238**	FS1
	1100	125	158	ESD	**3 842 541 240**	FS1
	1100	125	158		**3 842 515 366**	FS1
Clean Room	1000	125	158	ESD	**3 842 524 500**	FS1
	600	80	108	ESD	**3 842 547 835**	FS1
	800	125	158	ESD	**3 842 547 837**	FS1

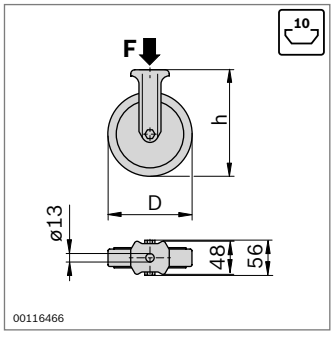

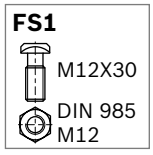

Trestle wheel	F (N)	D (mm)	h (mm)	ESD	No.	FS
	900	80	108	ESD	**3 842 541 242**	FS1
	1100	125	158	ESD	**3 842 541 244**	FS1
	600	80	108	ESD	**3 842 547 839**	FS1
	800	125	158	ESD	**3 842 547 840**	FS1

Material:

- Thermoplastic rubber
- Reinforced PA
- Clean Room: Gray PU; housing: steel, chrome-plated
- Solid rubber
- Conductive, conduction resistance ≤10^6 Ω

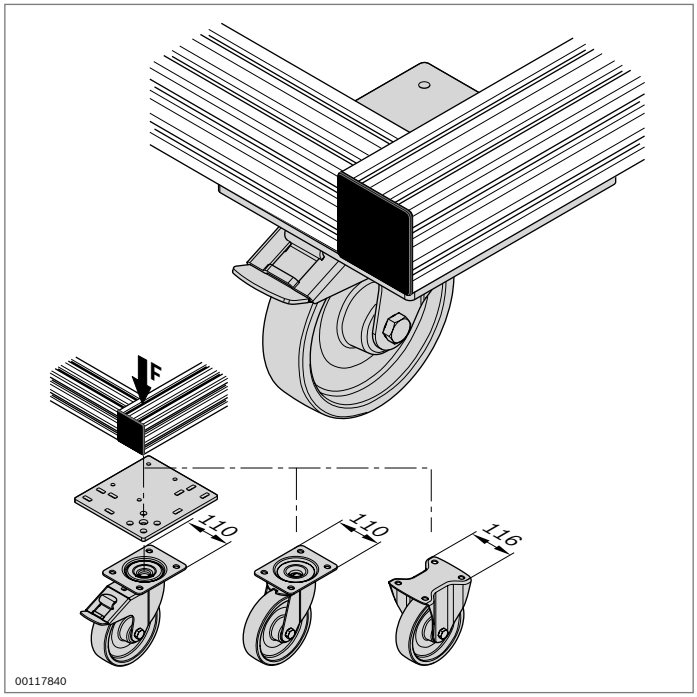

Heavy duty wheel

- Heavy-duty wheel with mounting flange
- Available as a caster wheel with lock, caster, and trestle wheel
- Heavy-duty, particularly suited for workshop applications
- Rollers with excellent running properties

Required accessories:

- Screw M10x16 (ISO 4762), washer A10.5 (DIN 125), lock washer 10FSt for fastening to the screw-on plate
- T-bolt, flange nut, central bolt M12 or S12 for fastening the screw-on plate to the profile frame

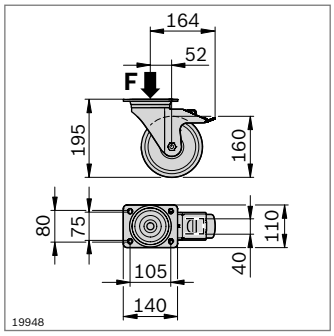

Caster wheel with lock		F (N)	No.
		3000	**3 842 536 736**
Material:	Housing: steel, galvanized, Wheel: TPU		

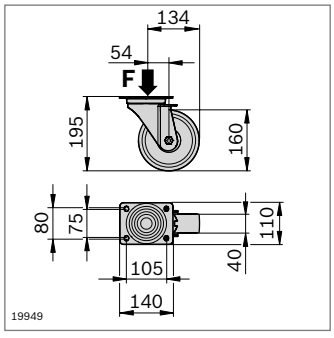

Caster wheel		F (N)	No.
		3000	**3 842 536 737**
Material:	Housing: steel, galvanized, Wheel: TPU		

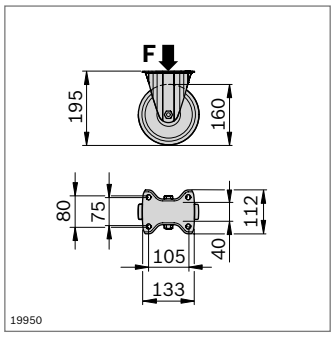

Trestle wheel		F (N)	No.
		3000	**3 842 536 738**
Material:	Housing: steel, galvanized, Wheel: TPU		

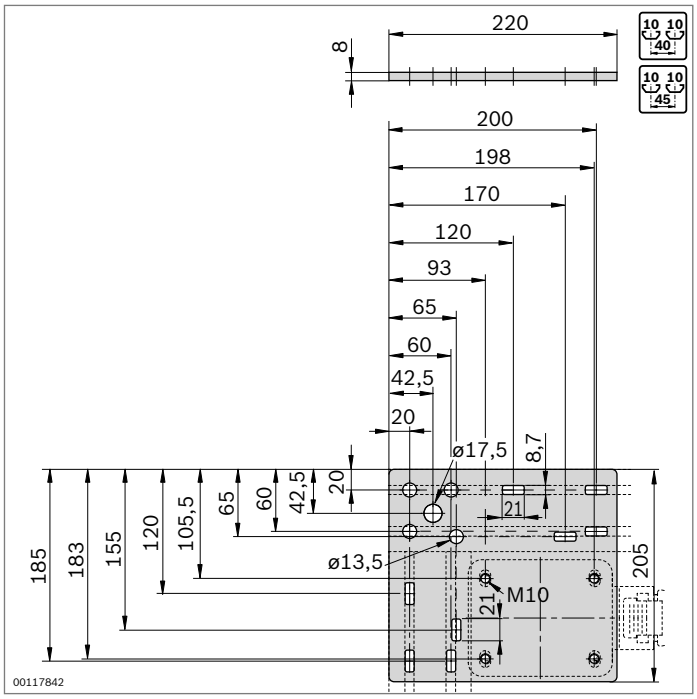

▶ Screw-on plate for attachment to 40 mm or 45 mm profiles

Screw-on plate		No.
	4	**3 842 536 701**

Material: Steel, galvanized

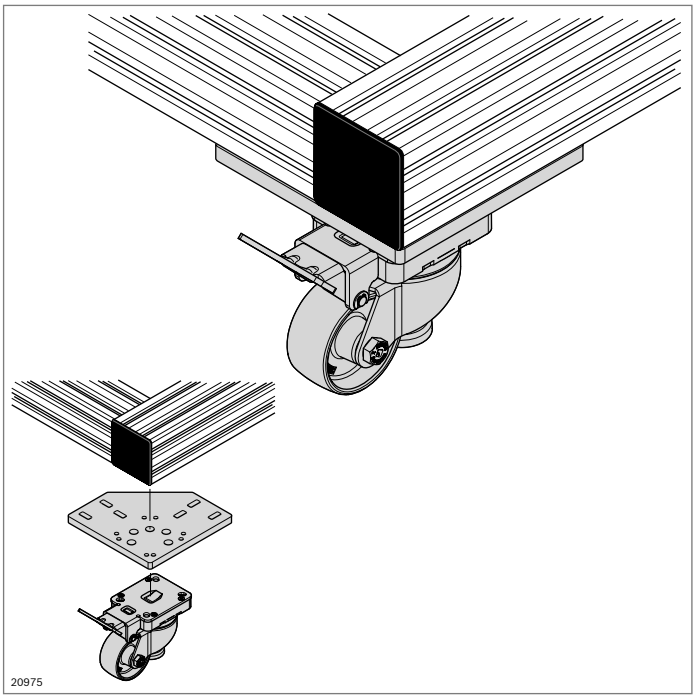

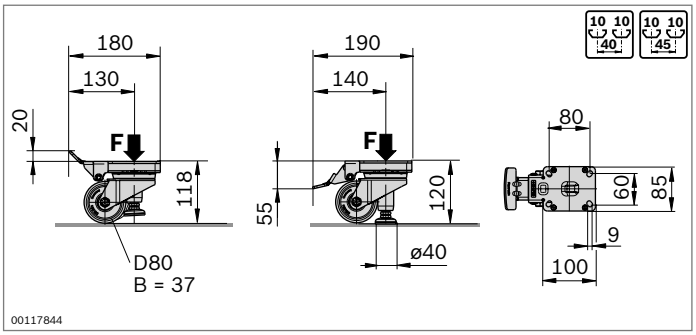

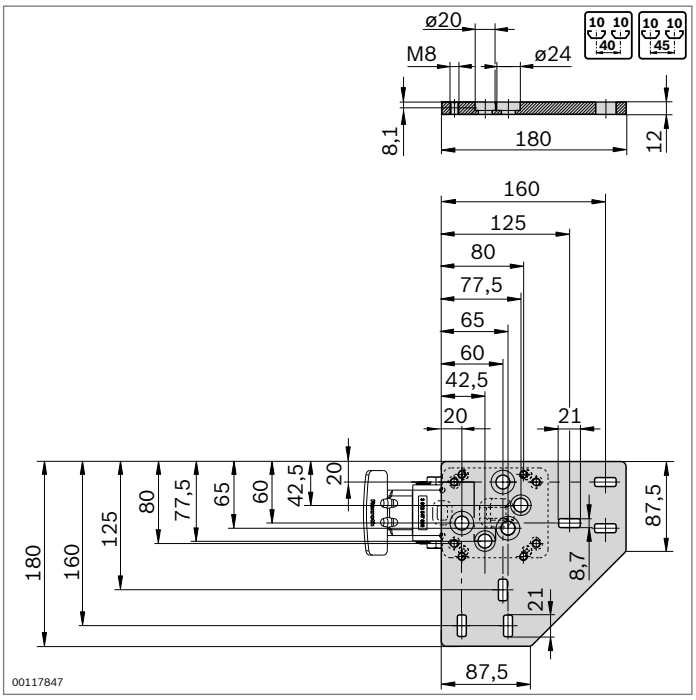

Lifting wheel

- Steerable lifting wheel
- The wheel turns into a stable base simply by engaging the stop lever
- Screw-on plate for mounting the lifting wheel
- With “Ideal-Stop”: locking lever does not swivel with the caster wheel but remains in the defined position. The locking lever is fixed in position on the frame by means of the screw-on plate, and the caster wheel moves freely

Required accessories:

- Screw M8x35 (ISO 4762), washer A8.4 (DIN 125), locking washer 8 FSt for attaching to the screw-on plate
- T-bolt M8x30 (p. 3-6), flange nut M8 (p. 3-6), central bolt M12 or S12 (p. 3-38) for fastening the screw-on plate to the profile frame

Lifting wheel	**F** (N)	**No.**
	2300	**3 842 547 890**

Material: Wheel: PA6, natural white
Housing: steel, galvanized
Base plate: rubber; gray

Screw-on plate		**No.**
	4	**3 842 536 902**

Material: Steel, galvanized

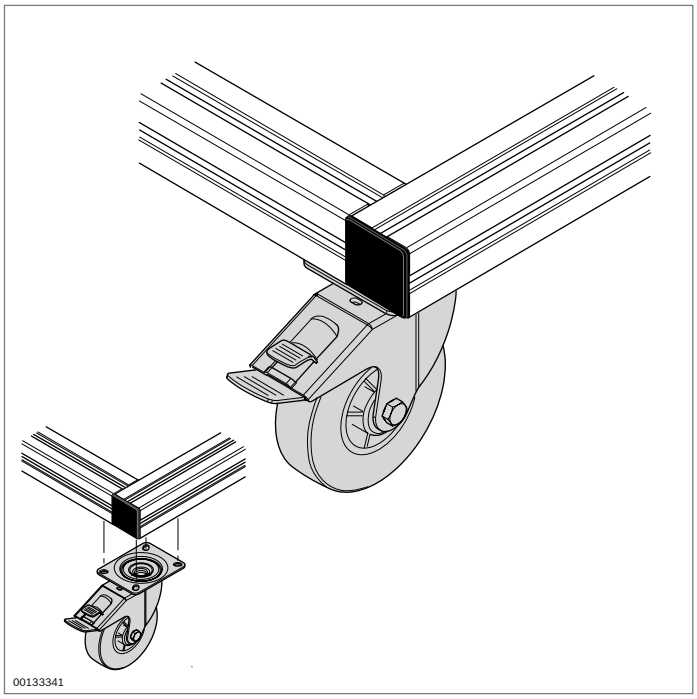

Wheel with mounting flange

- Robust rollers with mounting flange
- Excellent running properties, particularly suitable for workshop floors
- Available as a caster wheel with lock and as a trestle wheel
- Caster wheel with lock prevents the wheel from rolling or turning

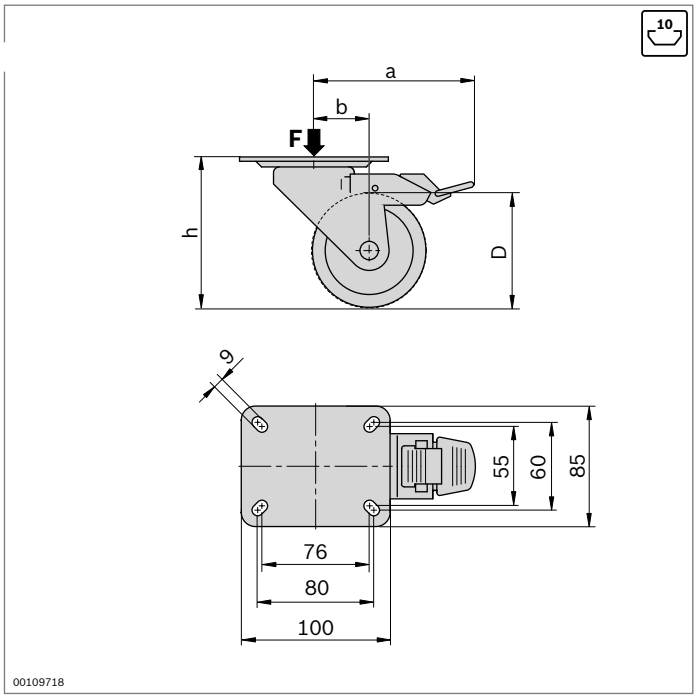

Caster wheel	F (N)	D (mm)	h (mm)	a (mm)	b (mm)	No.
	600	100	125	113	36±2	**3 842 259 790**
	900	125	150	123	40±2	**3 842 259 791**

Material: Wheel: solid rubber
Rims: polypropylene
Housing: sheet steel; galvanized

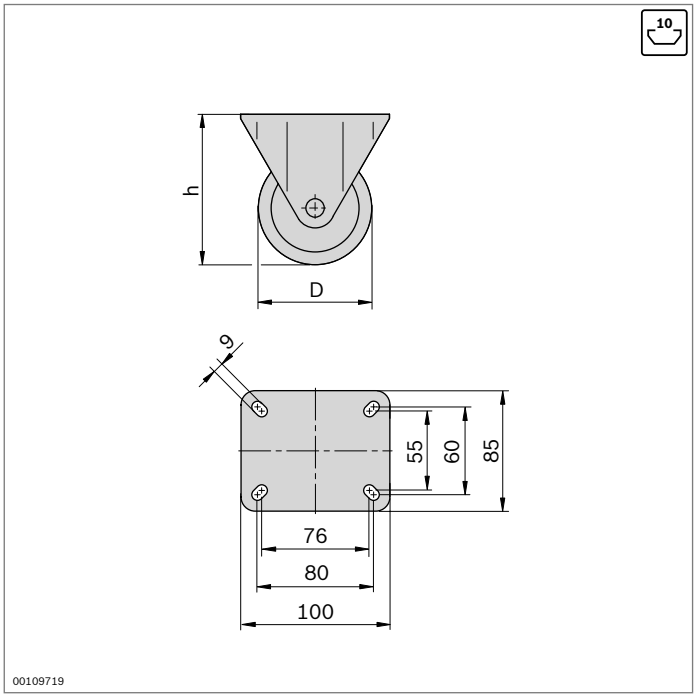

Trestle wheel	F (N)	D (mm)	h (mm)	No.
	600	100	125	**3 842 259 792**
	900	125	150	**3 842 259 793**

Material: Wheel: solid rubber
Rims: polypropylene
Housing: sheet steel; galvanized

FS1
ISO 4762
M8x16
8-FSt
DIN 125, 8,4
M8 10

Fastening kit	No.	FS
	3 842 259 794	3xFS1

Support of surface elements

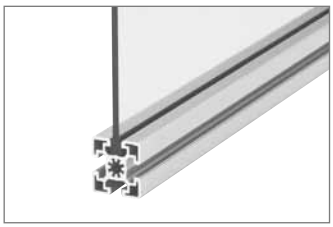

Mounting rim profile (p. 7-2)

Mounting rim profile Clean (p. 7-3)

Protective pane profile, PVC (p. 7-4)

Protective pane profile for cleanroom (p. 7-5)

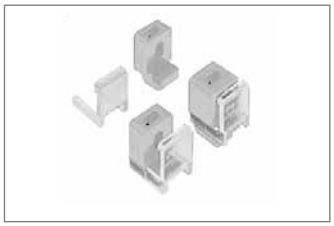

Variofix block (p. 7-6)
Variofix block S (p. 7-7)

Bracket S (p. 7-8)

Retainer ring (p. 7-9)

Cover strip profile (p. 7-10)

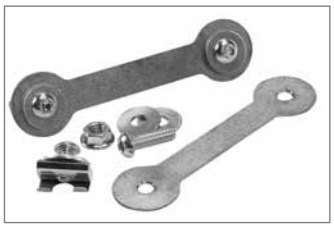

Potential equalizer (p. 7-11)

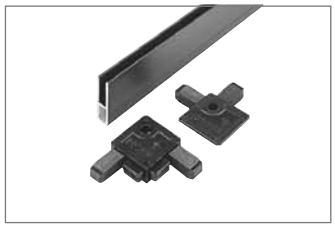

Protective grille profile (p. 7-12)

Clamp bushing (p. 7-13)

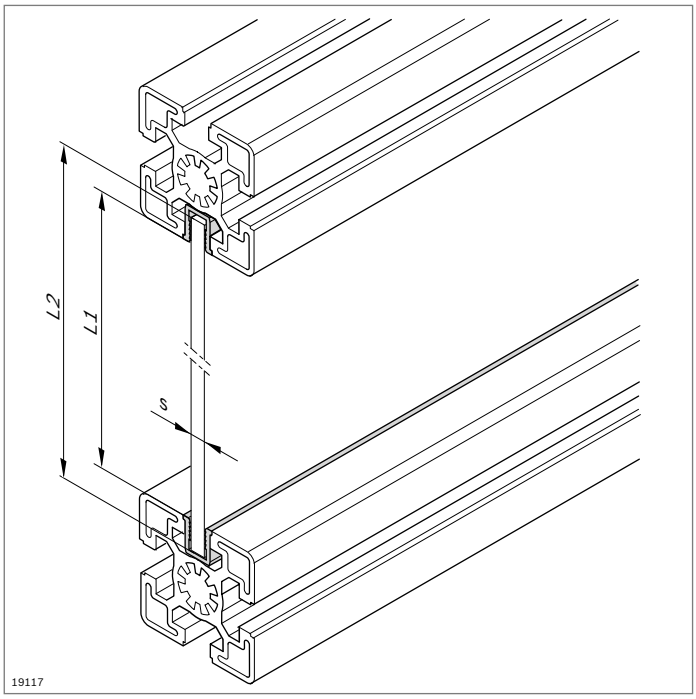

Mounting rim profile

- For the secure attachment of surface elements in the profile slot
- For surface elements up to 6 mm thick
- Installation during frame assembly
- Mounting rim profiles PP can also be used as cover profiles

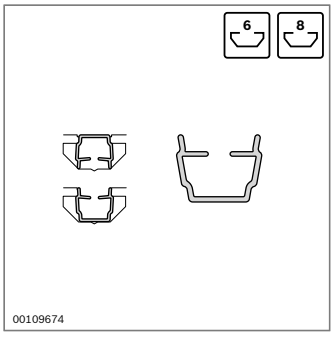

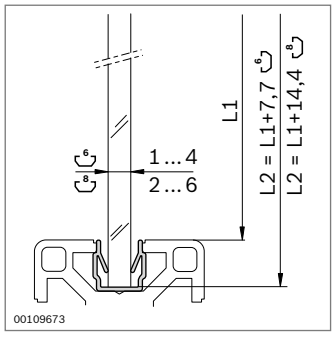

Mounting rim profile	Slot	s (mm)	L (mm)	No.
	6	1 ... 4	2000	**3 842 518 343**
	8	2 ... 6	2000	**3 842 518 347**

Material: PP; black

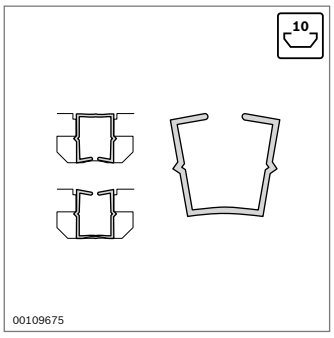

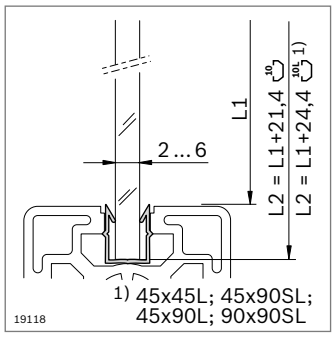

Mounting rim profile	Slot	s (mm)	L (mm)	No.
	10	2 ... 6	2000	**3 842 518 351**

Material: PP; black

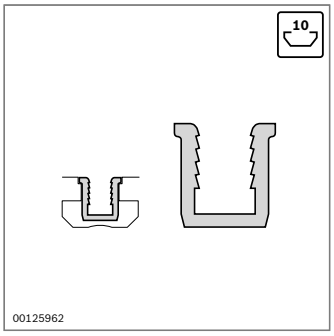

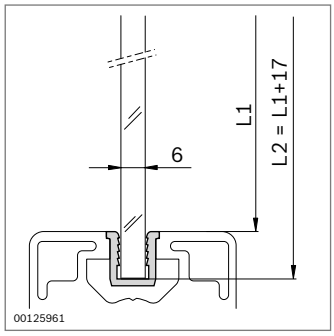

Mounting rim profile	Slot	s (mm)	L (mm)	No.
	10	6	2000	**3 842 146 906**

Material: PE; black

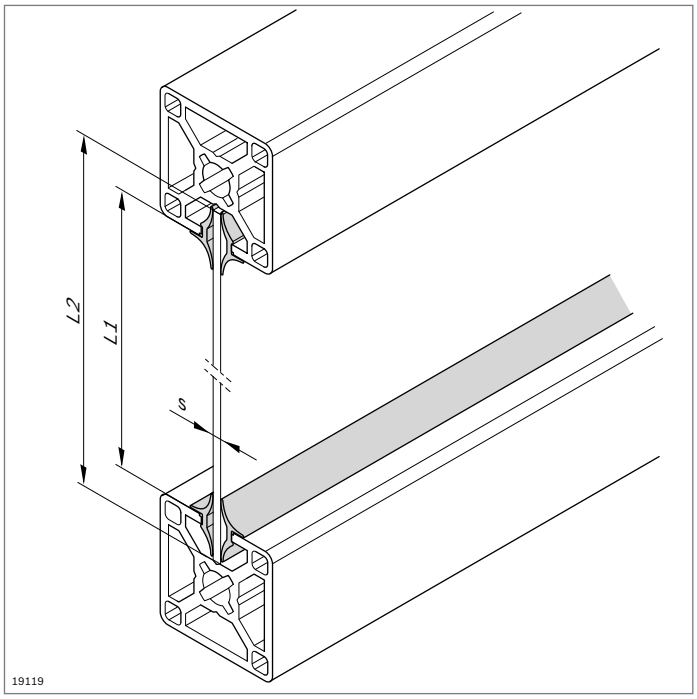

Mounting rim profile Clean

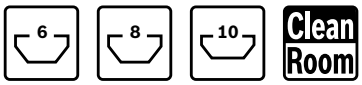

- For the secure attachment of surface elements in the profile slot
- For surface elements with a thickness of 2 to 8 mm
- For use on one or two sides of the mounting rim profile, depending on the surface element thickness
- Installation during profile frame assembly
- Suitable for use under cleanroom conditions
- Assessment of highly volatile organic emissions at room temperature, 50 °C and 120 °C, Report No. BO 9903-160

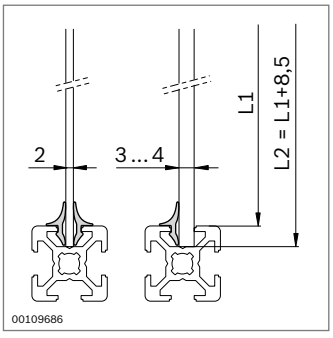

Mounting rim profile Clean	Slot	s (mm)	L (mm)	No.
	6	2 ... 4	10000	**3 842 523 493**

Material: TPE; light gray RAL 7035

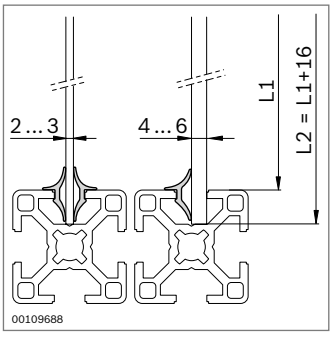

Mounting rim profile Clean	Slot	s (mm)	L (mm)	No.
	8	2 ... 6	10000	**3 842 523 494**

Material: TPE; light gray RAL 7035

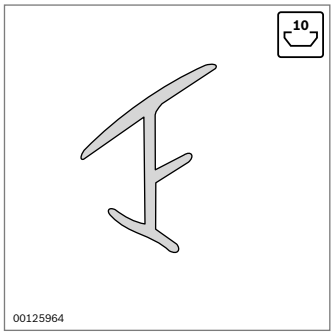

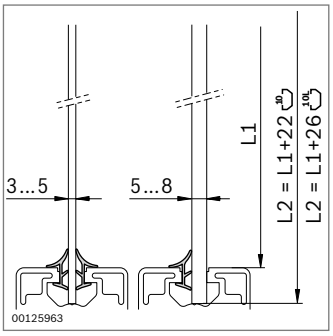

Mounting rim profile Clean	Slot	s (mm)	L (mm)	No.
	10	3 ... 8	10000	**3 842 548 949**

Material: TPE, light gray RAL 7035

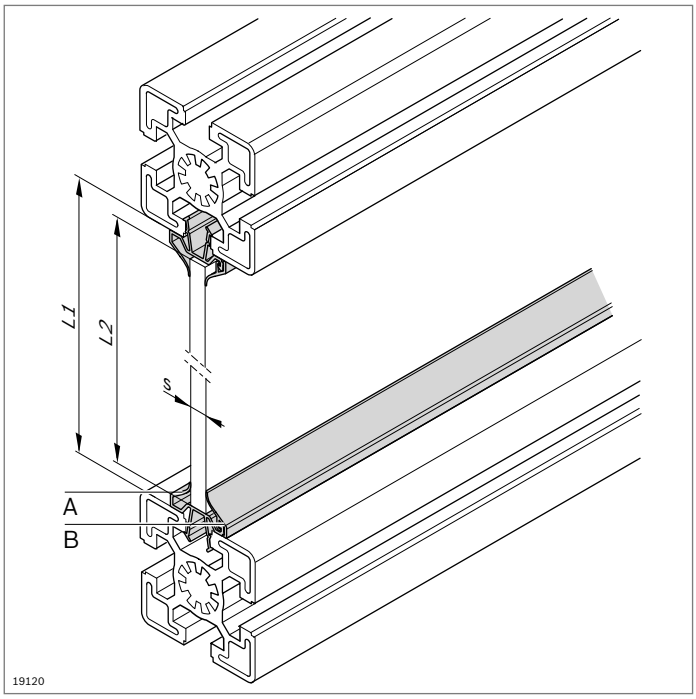

Protective pane profile, PVC

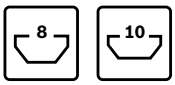

- For the secure attachment of surface elements
- For surface elements with a thickness of 1.5 to 8 mm
- For subsequent installation in closed frame constructions
- Installation of surface elements at center of slot
- The protective pane profile consists of the basic profile (**A**) and the clip strip (**B**)
- With lip seals to protect the working space from splashing liquids

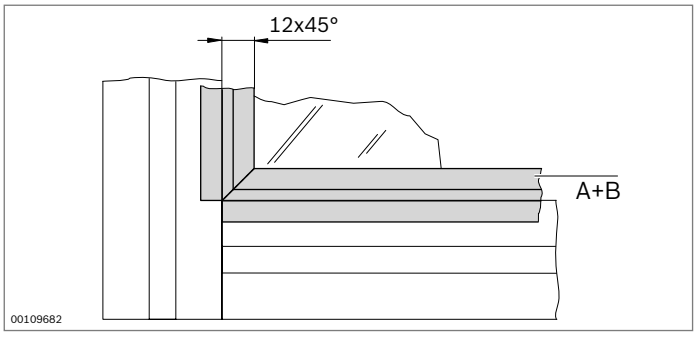

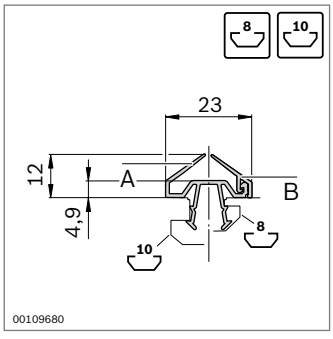

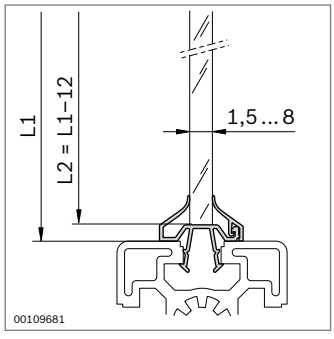

Protective pane profile, PVC		Slot	s (mm)	L (mm)		No.
A	Base profile	8, 10	1.5 ... 8	2000	10	**3 842 519 565**
B	Clip strip	8, 10	1.5 ... 8	2000	10	**3 842 519 567**

Material: PVC; black

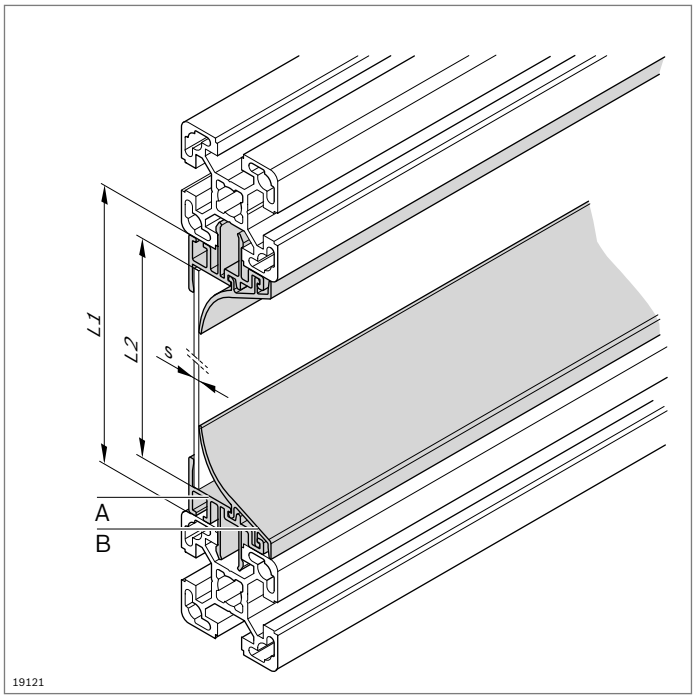

Protective pane profile Clean

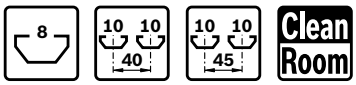

- For the secure attachment of surface elements
- For surface elements with a thickness of 1.5 to 8 mm
- For subsequent installation in closed frame constructions
- Installation of surface elements flush with the profile edge
- The protective pane profile consists of the basic profile (**A**) and the clip-on strip (**B**). Both profiles are required for proper functioning.
- Suitable for use under cleanroom conditions
- Assessment of highly volatile organic emissions at room temperature, 50 °C and 120 °C, Report No. BO 9903-161

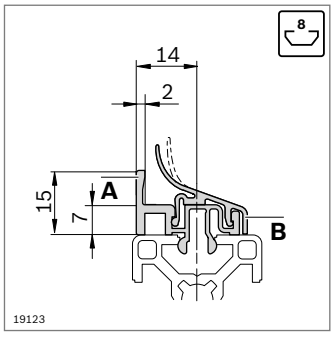

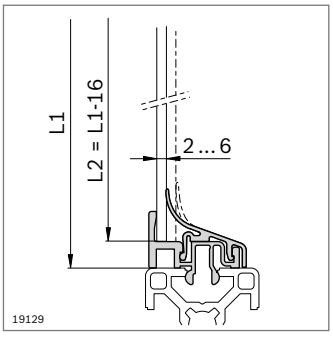

Protective pane profile		Slot	s (mm)	L (mm)		No.
A	Basic profile	8	2 ... 6	2000	10	**3 842 524 025**
B	Clip strip	8	2 ... 6	2000	10	**3 842 524 026**

Material: Base profile: aluminum, anodized
Clip strip: PP/TPE; light gray RAL 7035

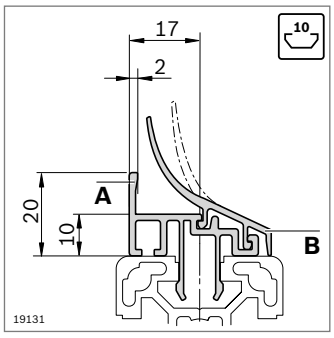

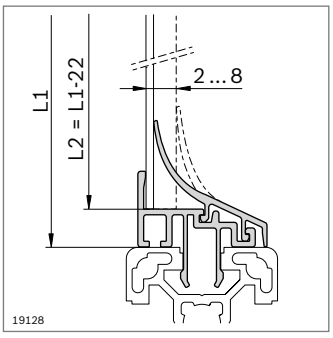

Protective pane profile		Slot	s (mm)	L (mm)		No.
A	Basic profile	10	2 ... 8	2000	10	**3 842 529 761**
B	Clip strip	10	2 ... 8	2000	10	**3 842 529 762**

Material: Base profile: aluminum, anodized
Clip-on strip: PP/TPE; light gray RAL 7035

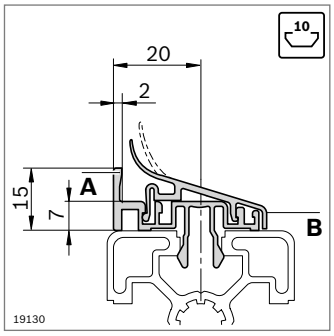

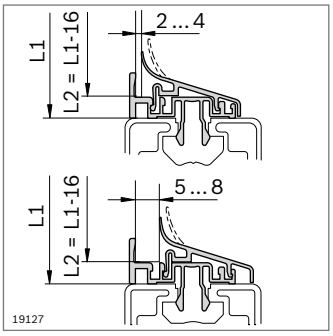

Protective pane profile		Slot	s (mm)	L (mm)		No.
A	Basic profile	10	2 ... 8	2000	10	**3 842 524 027**
B	Clip strip	10	2 ... 8	2000	10	**3 842 524 028**

Material: Basic profile: aluminum, anodized
Clip strip: PP/TPE; light gray RAL 7035

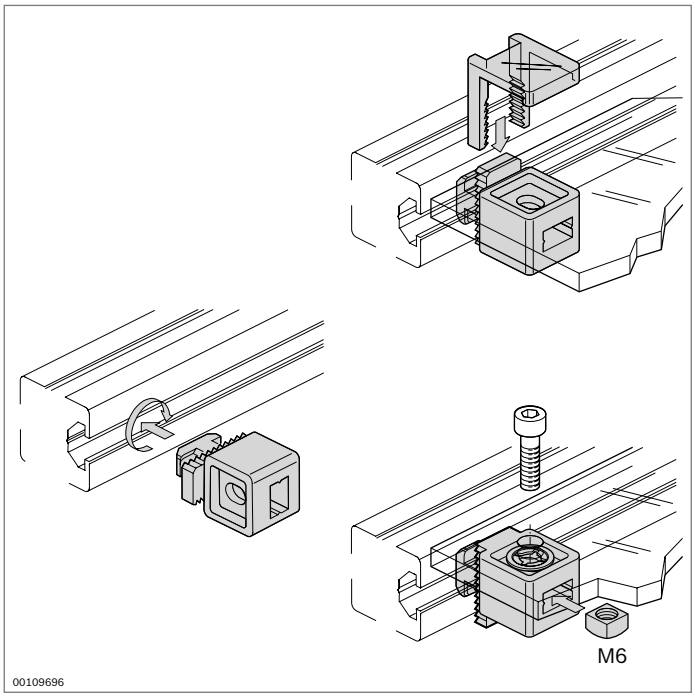

Variofix Block

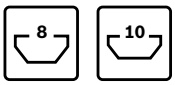

- For surface elements up to 13 mm thick
- For subsequent installation in closed frame constructions
- Asymmetrical form enables fastening of surface elements in two different positions
- Clamping via snap-in clips or screw fitting with square nut M6 (included in scope of delivery) and screw
- Retainer ring for connecting the screw to the surface element (Machinery Directive 2006/42/EC)

Accessories:
- Variofix remover (p. 14-7)
- Screw for fitting with square nut

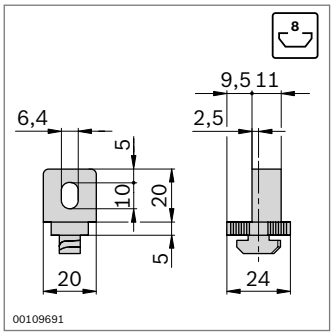

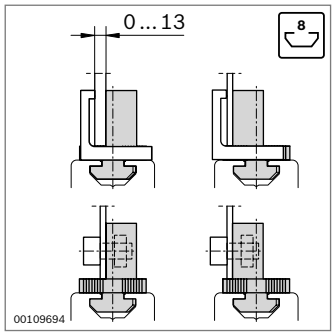

Variofix block	Color	Slot		No.
	Signal gray	8	10	**3 842 548 832**
Material:	PP Square nut: steel, galvanized			
Scope of delivery:	Incl. square nut			

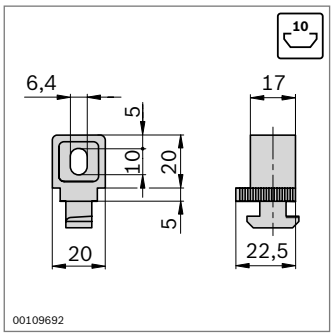

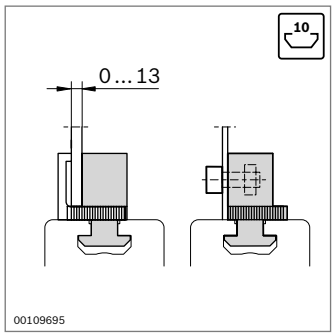

Variofix block	Color	Slot		No.
	Signal gray	10	10	**3 842 548 834**
Material:	PP Square nut: steel, galvanized			
Scope of delivery:	Incl. square nut M6, retainer ring M6			

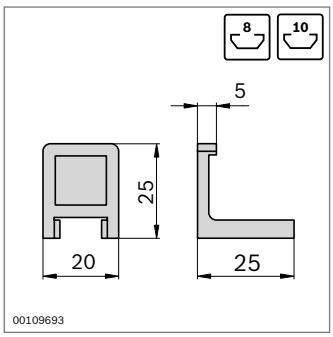

Snap-in clip			No.
		10	**3 842 184 738**
Material:	PA; colorless		

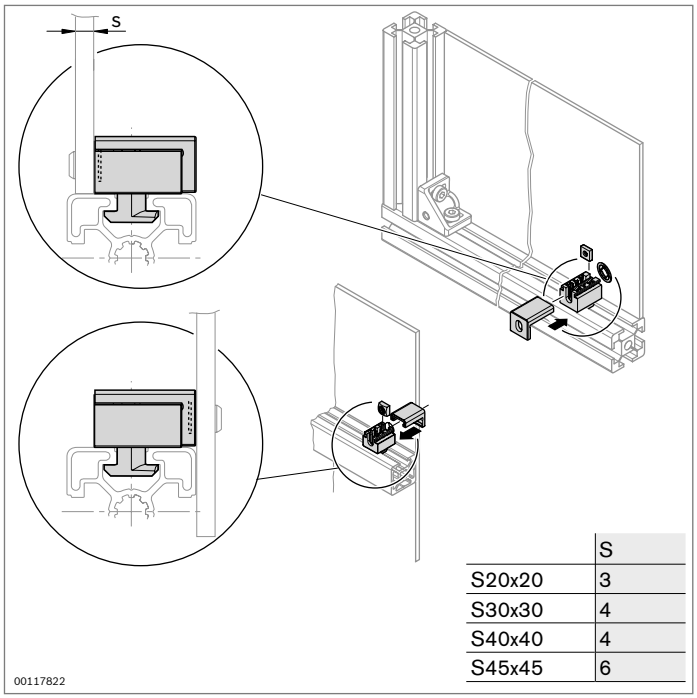

	S
S20x20	3
S30x30	4
S40x40	4
S45x45	6

Variofix S Block

- For virtually gap-free surface element mounting
- For subsequent installation in closed frame constructions
- The asymmetrical design and cap enable variable mounting positions for the surface elements: flush with the profile edge or situated in front of the profile
- Retainer ring for connecting the screw to the surface element (Machinery Directive 2006/42/EC)

Required accessories:
Screw for fastening the surface element

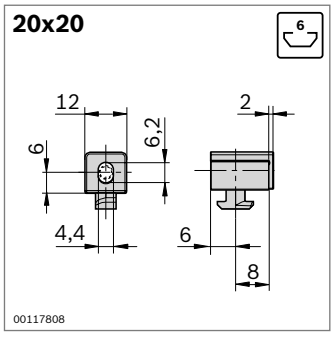

Variofix S block	Color	Slot		No.
20x20	Signal gray	6	10	**3 842 548 836**
Material:	PP Square nut: steel, galvanized			
Scope of delivery:	Incl. square nut M4, cap			

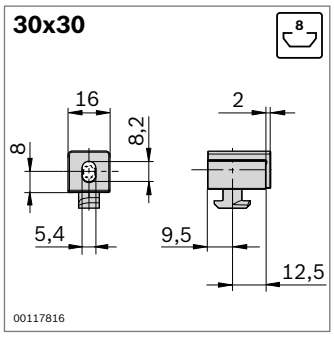

Variofix S block	Color	Slot		No.
30x30	Signal gray	8	10	**3 842 548 838**
Material:	PP Square nut: steel, galvanized			
Scope of delivery:	Incl. square nut M5, cap, retainer ring			

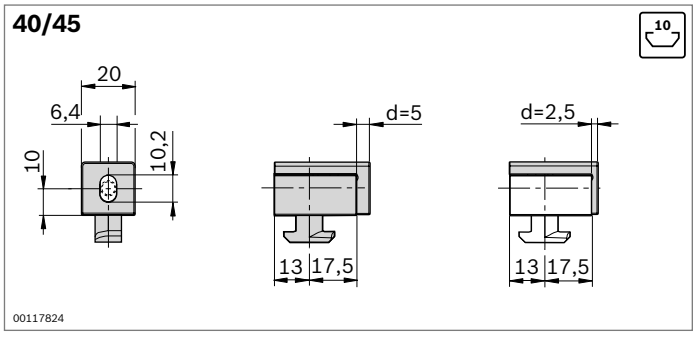

Variofix block S	Color	Slot		No.
40/45	Signal gray	10	10	**3 842 548 840**
Material:	PP Square nut: steel, galvanized			
Scope of delivery:	Incl. square nut M5, 2 x cap (d = 2.5 mm; d = 5 mm), retainer ring			

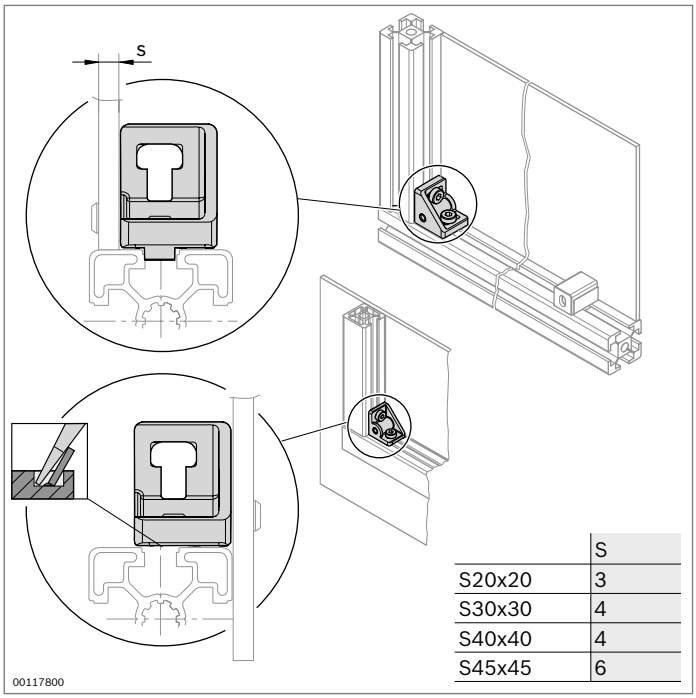

	S
S20x20	3
S30x30	4
S40x40	4
S45x45	6

Bracket S

- Bracket with thread for virtually gap-free mounting of surface elements
- For subsequent installation in closed frame constructions
- Surface elements can be mounted in different positions: flush with the profile edge or situated in front of the profile (by breaking off the centering lug)

Required accessories:
Screw for fastening the surface element
Accessories, optional:
- Variofix S block (p. 7-7)
- Retainer ring (p. 7-9)

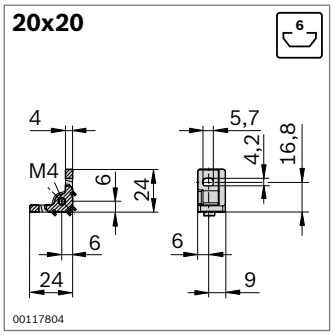

Bracket S	Slot		No.	FS
20x20	6	20	**3 842 536 489**	
20x20 set	6	1	**3 842 536 670**	2xFS1

Material: Diecast aluminum
Fastening material: steel, galvanized
Scope of delivery: Set incl. fastening material (FS)

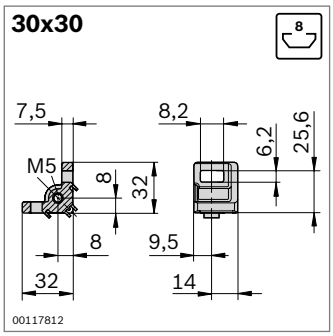

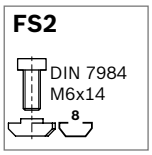

Bracket S	Slot		No.	FS
30x30	8	20	**3 842 536 490**	
30x30 set	8	1	**3 842 536 671**	2xFS2

Material: diecast aluminum
Fastening material: steel, galvanized
Scope of delivery: Set incl. fastening material (FS)

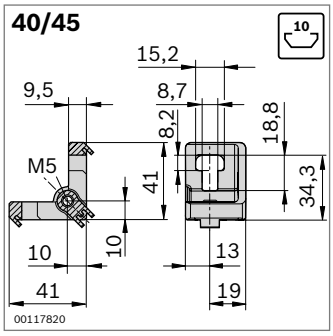

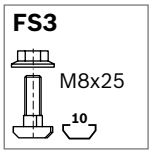

Bracket S	Slot		No.	FS
40/45	10	20	**3 842 536 491**	
40/45 set	10	1	**3 842 536 672**	2xFS3

Material: diecast aluminum
Fastening material: steel, galvanized
Scope of delivery: Set incl. fastening material (FS)

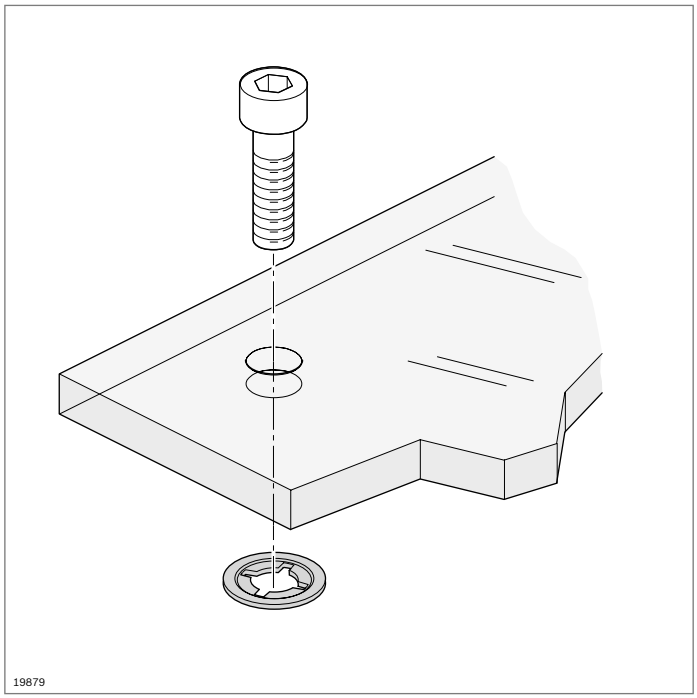

Retainer ring

- Secures the fastening screw to the surface element
- For use with all Variofix blocks, but not for the S bracket
- Retrofitting possible
- For various thread sizes

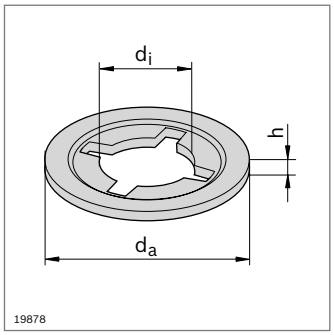

Retainer ring	d_a (mm)	d_i (mm)	h (mm)		No.
M4	9.0	3.4	1.0	100	**3 842 542 328**
M5	10.0	4.5	1.0	100	**3 842 542 329**
M6	12.5	5.5	1.5	100	**3 842 542 330**

Material: PA; black

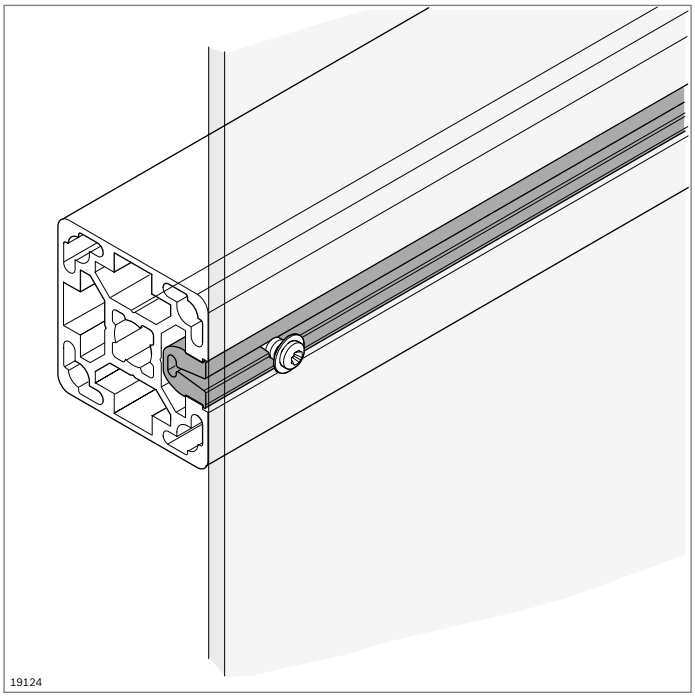

Cover strip profile

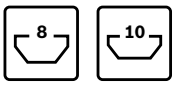

- Cover strip profile for fastening surface elements using commercially available sheet metal screws
- Clipping the cover strip profile into the profile slot
- Inexpensive connection element

Required accessories:
Sheet metal screws for fastening surface elements

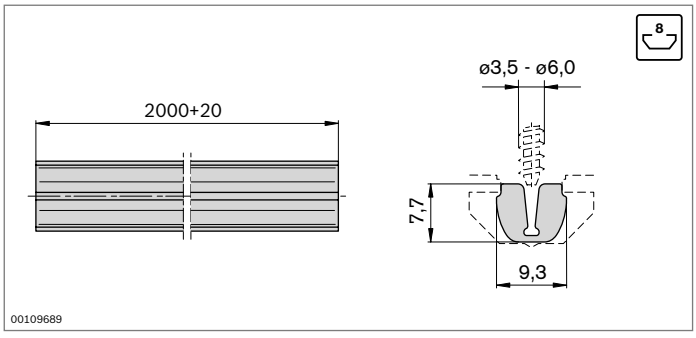

Cover strip profile	Slot	L (mm)	No.
	8	2000	**3 842 524 069**

Material: PVC, light gray RAL 7035

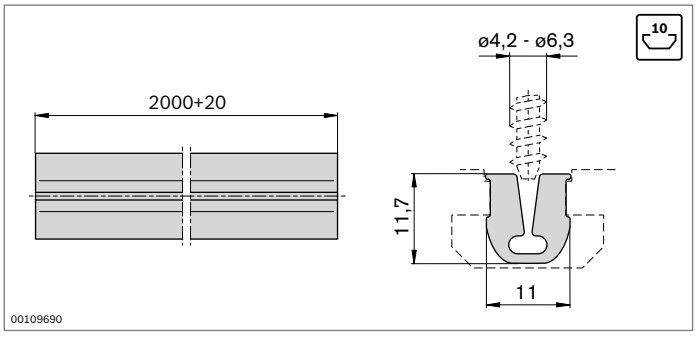

Cover strip profile	Slot	L (mm)	No.
	10	2000	**3 842 524 072**

Material: PVC, light gray RAL 7035

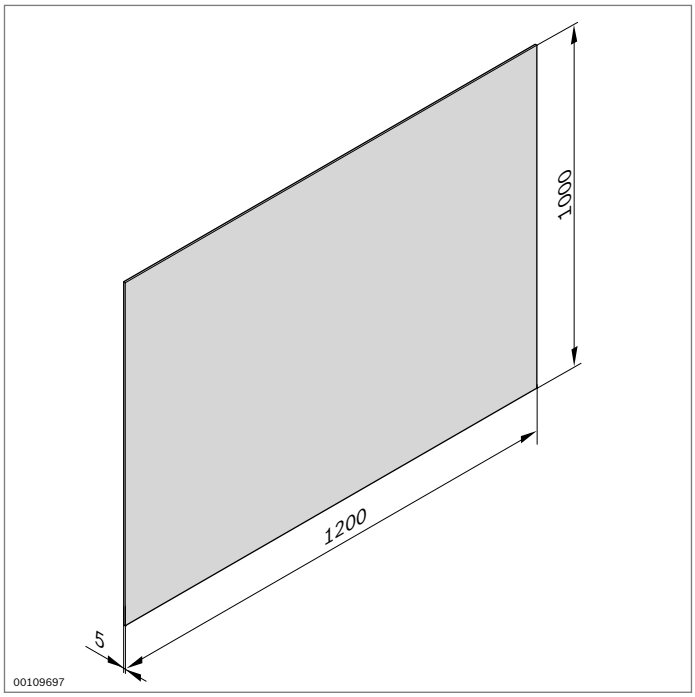

Universal plate

- For the construction of tablets, material shuttles, or privacy shields on tables or frames

Accessories:
Frame profile, support of surface elements

Universal plate	ESD	No.
PP		**3 842 516 837**
PS	ESD	**3 842 516 838**

Material: PP: gray, smooth on one side, grained on the other
PS: black, smooth on both sides

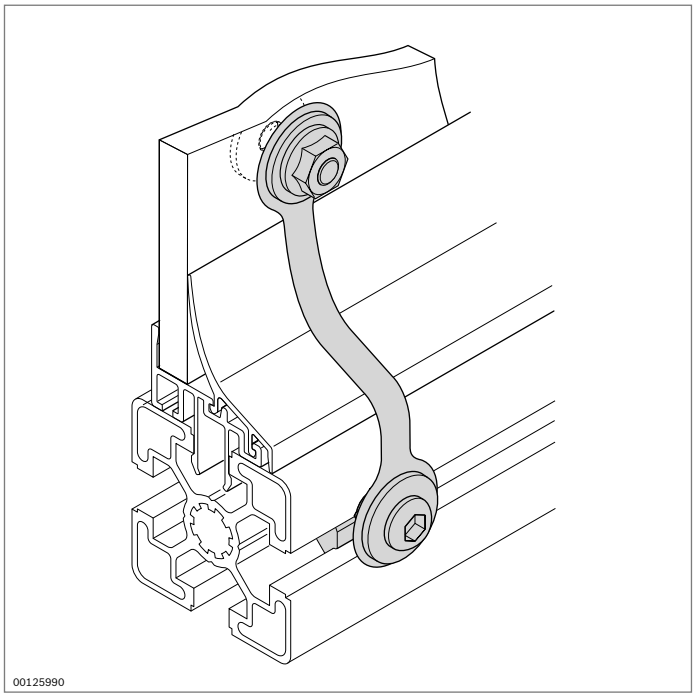

Potential equalizer

- To establish a defined electrostatic conduction between surface elements and strut profiles

Potential equalizer	ESD		No.
	ESD	10	**3 842 536 148**

Material: Strip steel, stainless
Fastening material: steel, galvanized
Scope of delivery: Incl. fastening material

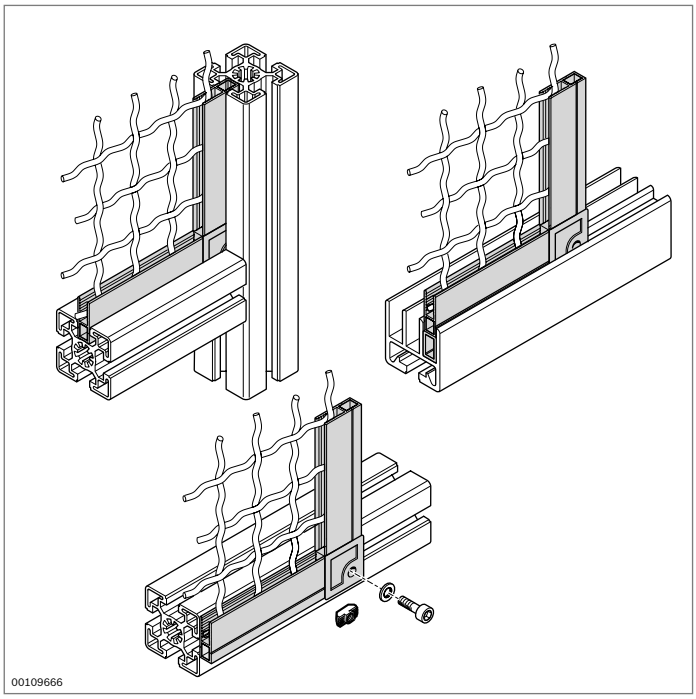

Protective grille profile

- For constructing frames for woven wire grilles or surface elements
- For woven wire grilles with a wire diameter up to 3.1 mm
- For surface elements up to 6 mm thick
- Screw fitting of frame to the outside of strut profiles (subsequent installation)
- For inserting the frame into the slot of a strut profile or a sliding door profile Al 45
- Corner pieces for inner and outer corners

Accessories, optional:
- T-nut M6 (p. 3-4)
- Screw M6

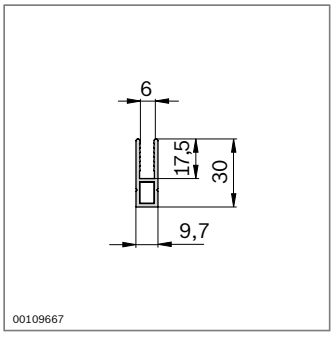

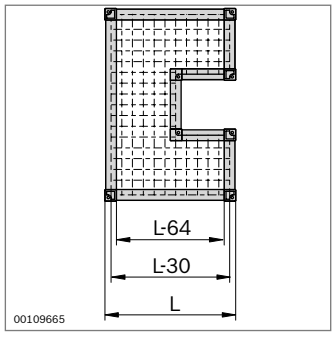

Protective grille profile	L (mm)		No.
	3000[1]	20	**3 842 305 766**

[1] Due to the (anodic oxidation) contact points produced in the manufacturing process, supplied in profile length of 3100 mm

Material: aluminum, black anodized

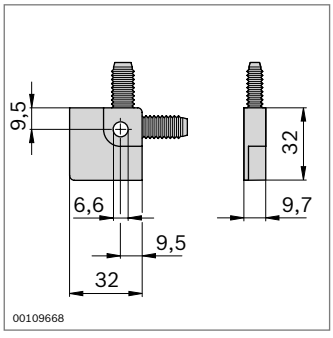

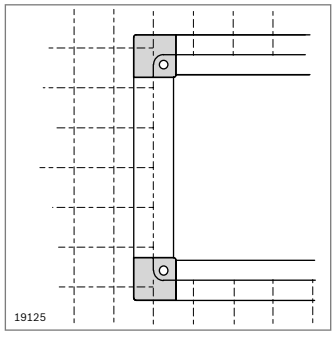

Inner corner piece		No.
	20	**3 842 305 768**

Material: PA; black

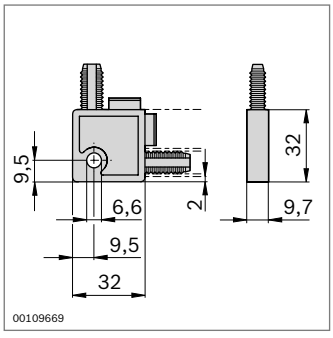

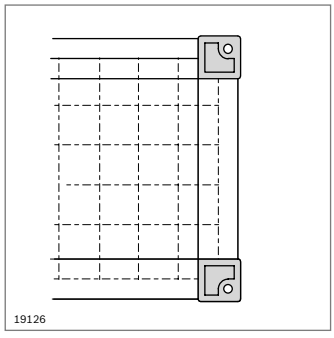

Outer corner piece		No.
	20	**3 842 305 767**

Material: PA; black

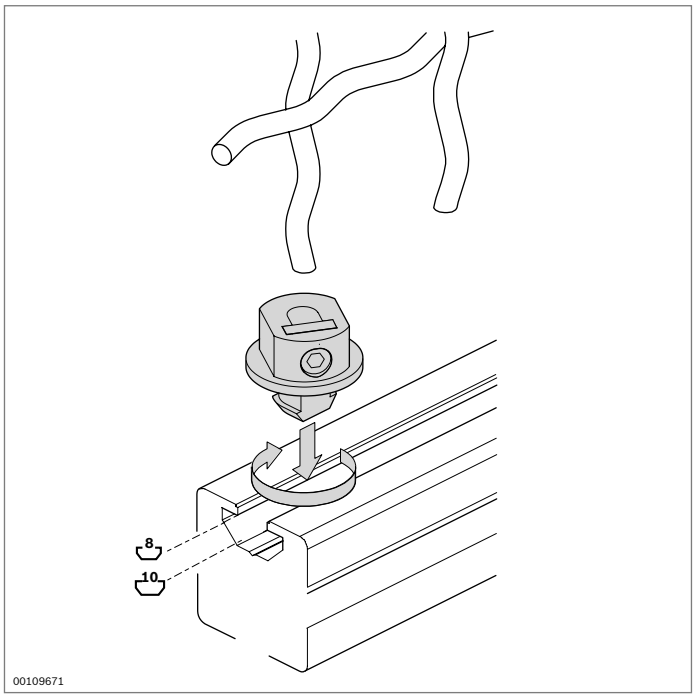

Clamp bushing

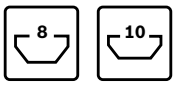

- For fastening woven wire grilles in the profile slot
- For woven wire grilles with a wire diameter up to 3.1 mm
- Suitable for 8 mm and 10 mm slots
- Inexpensive connection element
- Rattle-free attachment

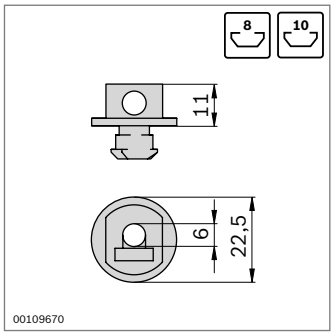

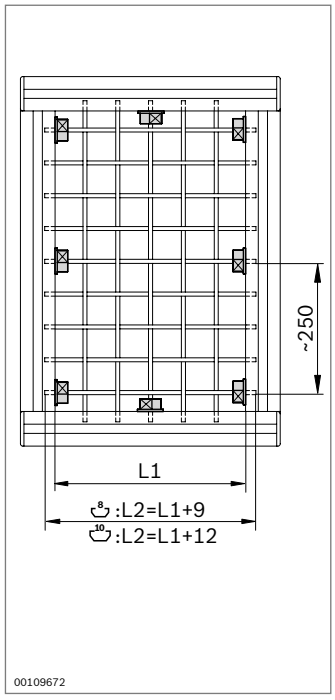

Clamp bushing	Slot		No.	FS
	8, 10	100	**3 842 515 244**	FS1

Material: Diecast zinc
Fastening material: steel, galvanized

FS1

EN ISO 4027
M6x10
DIN 562
M6-04

Doors and fittings

Hinge profile (p. 8-3)

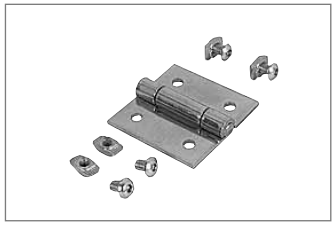

Hinge (p. 8-4)

Hinge, plastic (p. 8-5)

Hinge, aluminum (p. 8-6)

LIFTOFF hinge (p. 8-7)

Hinge, removable (p. 8-8)

Hinge, adjustable (p. 8-9)

Folding door element (p. 8-10)

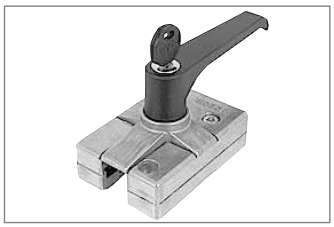

Door lock for swing and sliding doors (p. 8-11)

Door lock (p. 8-12)

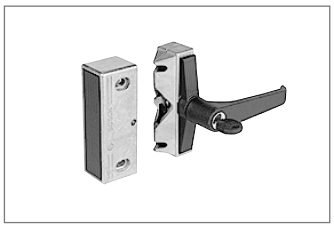

Door lock for EcoSafe sliding doors (p. 8-13)

Mortise lock, door handle (p. 8-14)

Door lock for swing doors
(p. 8-16)

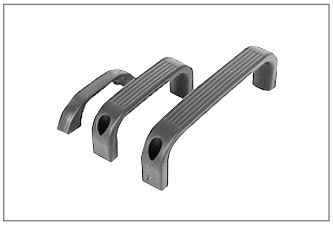

Bow-shaped handle
(p. 8-17)

Safety handle (p. 8-18)

Sealing strip (p. 8-19)
Sealing profile (p. 8-20)

Slider (p. 8-21)

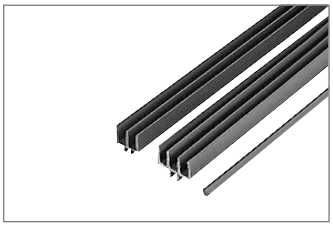

Sliding door profile PVC
(p. 8-22)

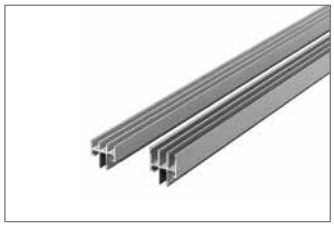

Sliding door profile Al clip
(p. 8-23)

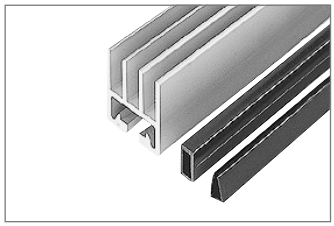

Sliding door profile Al 45
(p. 8-24)

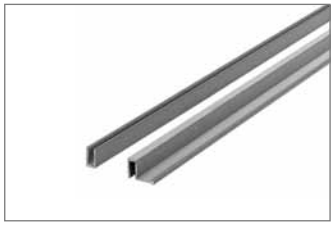

Edge protector, door handle
profile (p. 8-26)

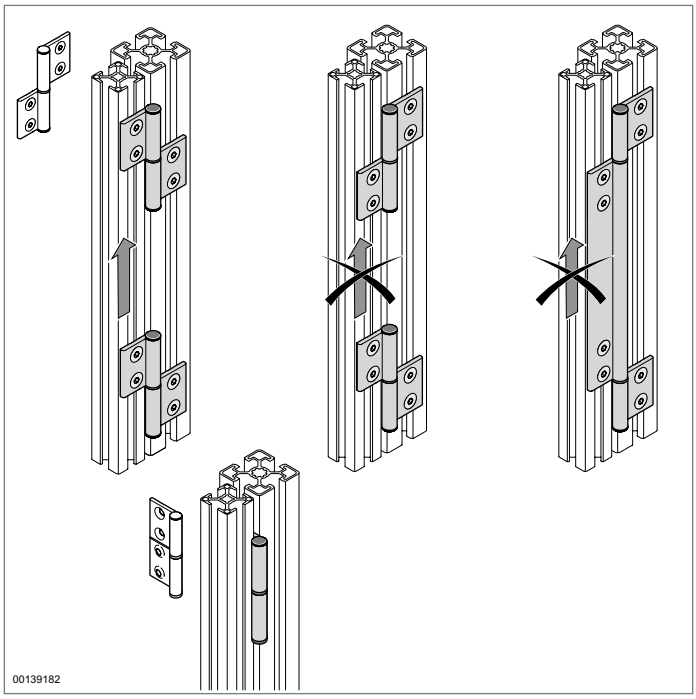

Hinge profile

- For self-assembly of hinges or hinge bands
- Possible to use as a non-transparent hinge band to fully cover the door gap
- Hinge profiles for slot dimensions 30 and 40/45/50 can also be combined for maximum flexibility
- For doors with profile frames or doors made of solid surface elements
- Assembly on exterior or interior
- Assembly as removable and non-removable hinges
- Opening to the right and left
- Centering slots as a drill guide for mounting bores
- Required finishing:
  - cut the hinge halves to length
  - drill for fixing

Required accessories:
- hinge pins
- T-nut M6 (p. 3-4)
- screw ISO 10642 M6x12 (8 mm slot)
- screw ISO 10642 M6x16 (10 mm slot)

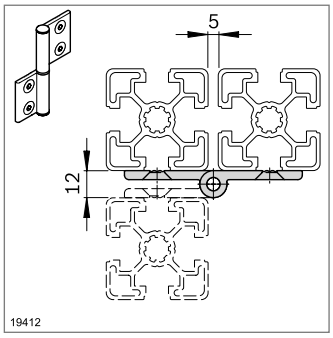

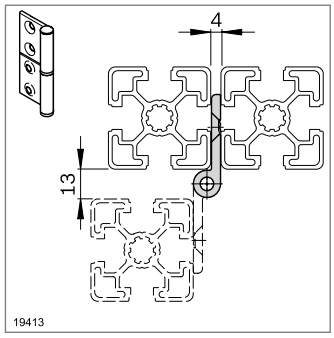

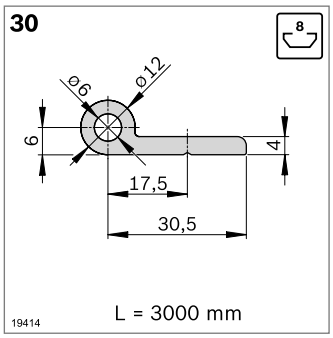

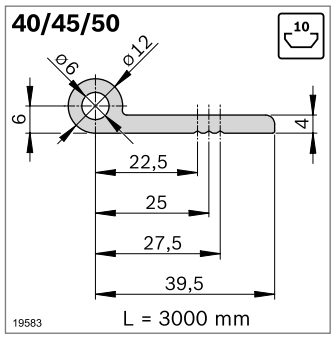

Hinge profile	L (mm)		No.
30	3000	10	**3 842 543 371**
40/45/50	3000	10	**3 842 543 372**

Material: Aluminum, anodized

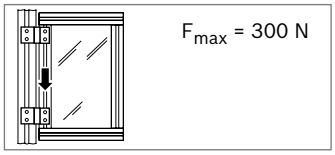

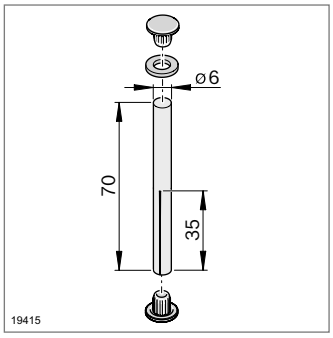

Hinge pins		No.
	10	**3 842 544 661**

Material: Grooved pin: steel; galvanized
Washer, cap: PA

Scope of delivery: Incl. grooved pin, 2 x cap, washer

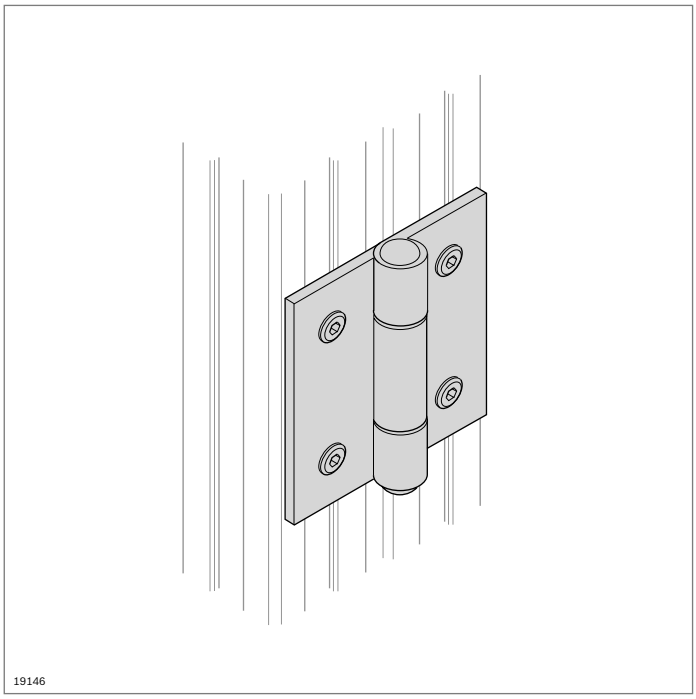

Hinge

- Assembly possible on solid surface elements
- For small doors and flaps
- Steel hinge for profiles with 6 mm slot

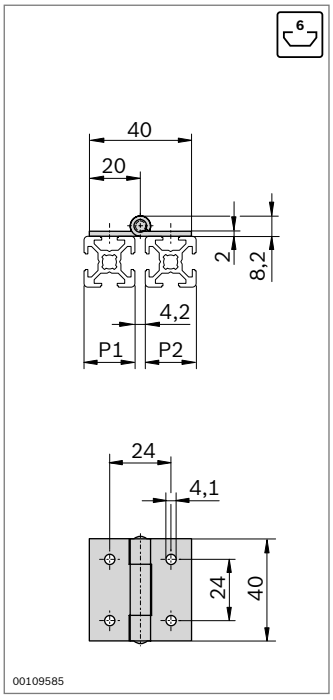

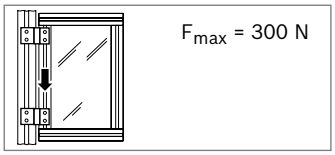

FS1

ISO 7380
M4x6

Hinge	P1 (mm)	P2 (mm)	ESD		No.	FS
	20	20		2	**3 842 535 684**	4xFS1

Material: Steel, stainless
Fastening material: steel; galvanized
Scope of delivery: Incl. fastening material (FS)

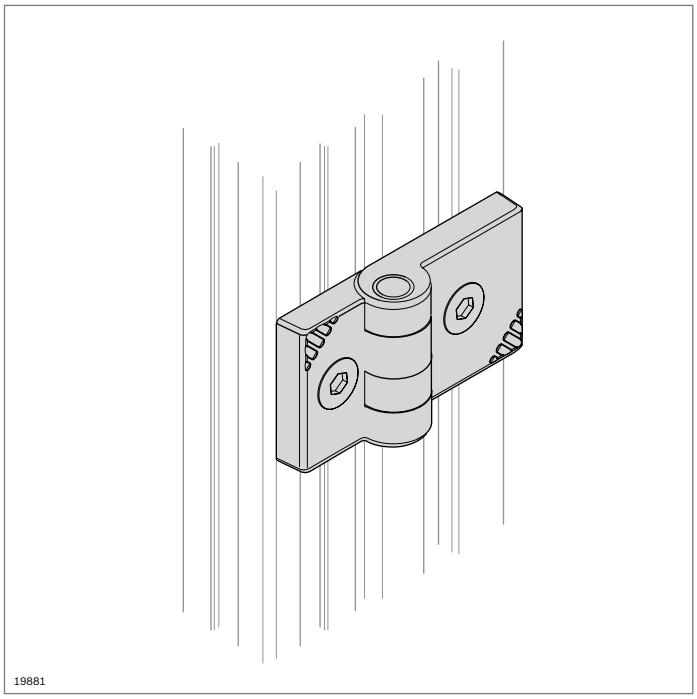

Hinge, plastic

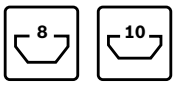

- Plastic hinge for profiles with 8 mm or 10 mm slot
- Assembly possible on solid surface elements
- Centering bolts for easy assembly and as a anti-torsion element

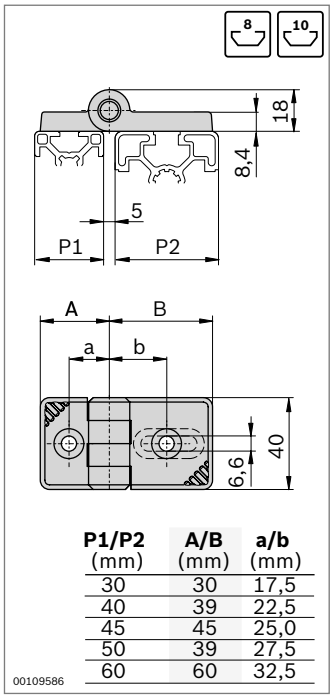

P1/P2 (mm)	A/B (mm)	a/b (mm)
30	30	17,5
40	39	22,5
45	45	25,0
50	39	27,5
60	60	32,5

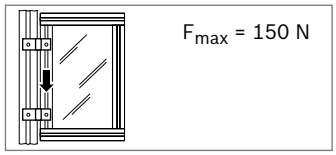

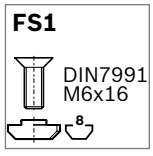

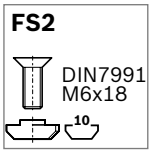

Hinge, plastic	P1 (mm)	P2 (mm)		No.	FS
	30	30	2	**3 842 544 500**	2xFS1
	30	40/50	2	**3 842 544 501**	1xFS1, 1xFS2
	30	45	2	**3 842 544 502**	1xFS1, 1xFS2
	30	60	2	**3 842 544 503**	1xFS1, 1xFS2
	40/50	40/50	2	**3 842 544 504**	2xFS2
	45	45	2	**3 842 544 505**	2xFS2
	45	60	2	**3 842 544 506**	2xFS2
	60	60	2	**3 842 544 507**	2xFS2

Material: PA; black
Hinge axle: steel; galvanized
Fastening material: steel; galvanized

Scope of delivery: Incl. fastening material (FS)

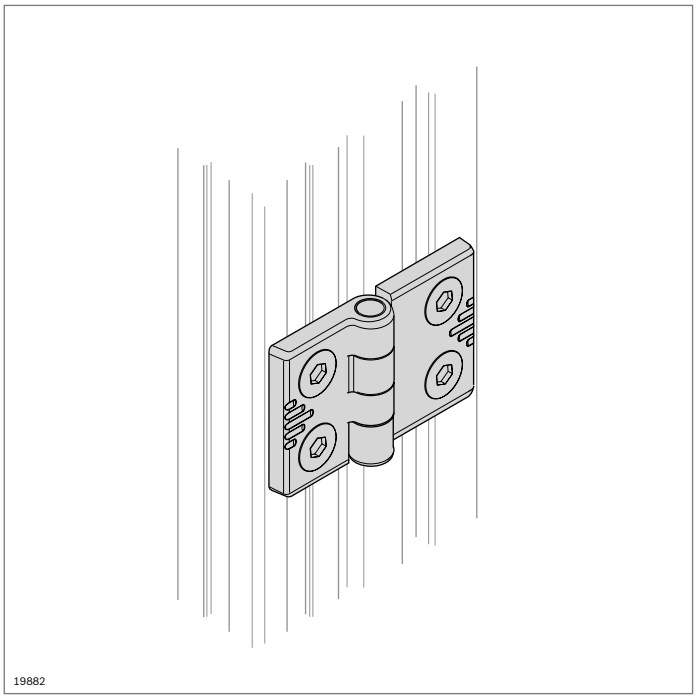

Hinge, aluminum

- Aluminum hinge for all slot systems
- Assembly possible on solid surface elements
- High-quality version
- Conductive version
- Suitable for use under cleanroom conditions thanks to wear-resistant guide bushings

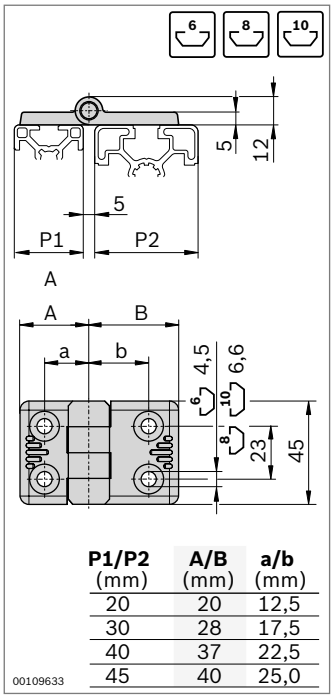

P1/P2 (mm)	A/B (mm)	a/b (mm)
20	20	12,5
30	28	17,5
40	37	22,5
45	40	25,0

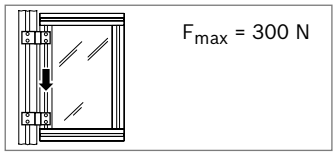

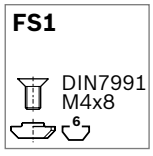

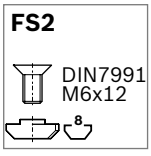

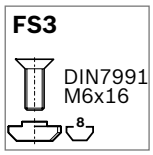

Hinge, aluminum	P1 (mm)	P2 (mm)	ESD		No.	FS
	20	20		2	**3 842 544 525**	4xFS1
	20	30		2	**3 842 544 526**	2xFS1, 2xFS2
	30	30		2	**3 842 544 527**	4xFS2
	30	40		2	**3 842 544 528**	2xFS2, 2xFS3
	30	45		2	**3 842 544 529**	2xFS2, 2xFS3
	40	40		2	**3 842 544 530**	4xFS3
	45	45		2	**3 842 544 531**	4xFS3

Material: Diecast aluminum; nickel-plated
Fastening material: steel; galvanized
Scope of delivery: Incl. fastening material (FS)

Fraunhofer IPA TESTED DEVICE
Report No. BO 9903-159

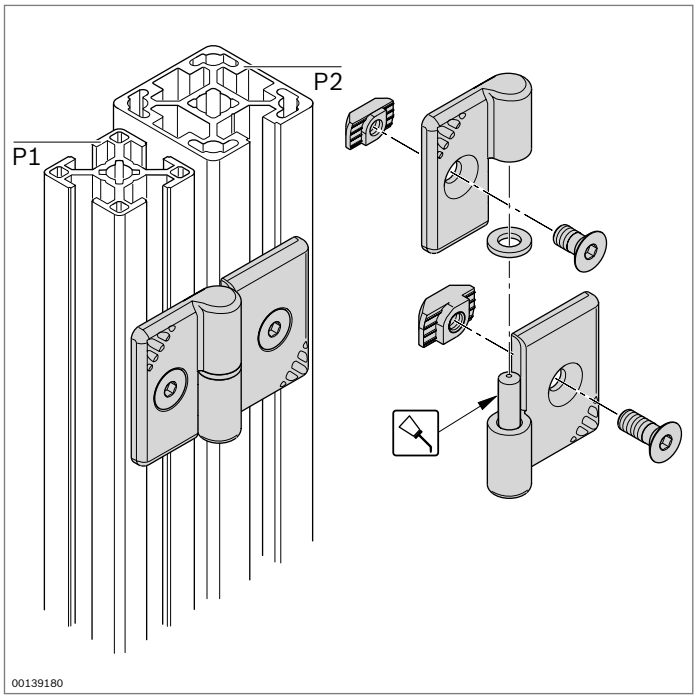

LIFTOFF hinge

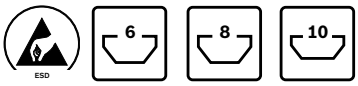

designLINE

- Removable compact hinge, opening to the right or left
- *designLINE* version with special silver paint (RAL 9006) for an attractive, high-quality design
- Centering lugs as an assembly aid and twist lock

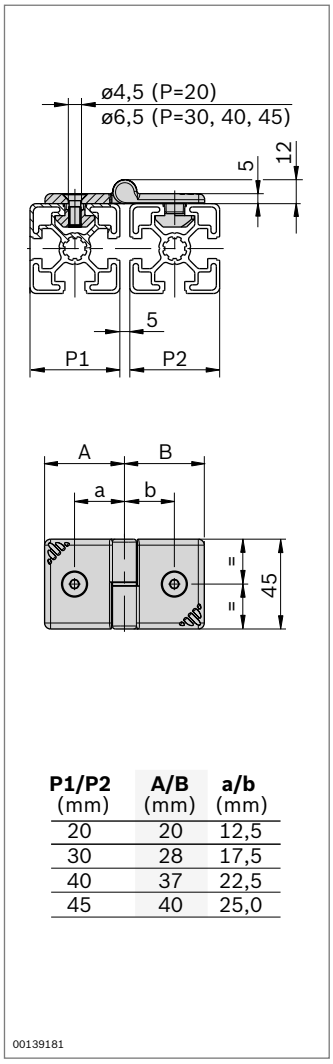

P1/P2 (mm)	A/B (mm)	a/b (mm)
20	20	12,5
30	28	17,5
40	37	22,5
45	40	25,0

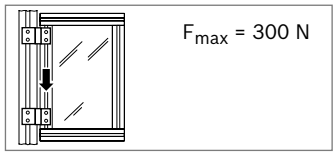

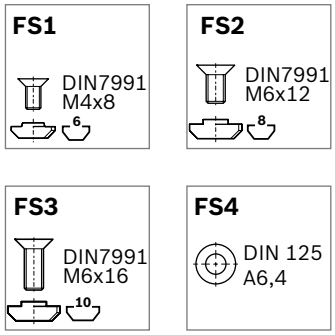

LIFTOFF hinge	P1 (mm)	P2 (mm)		No.	FS
right	20	20	2	**3 842 543 334**	2xFS1, FS4
	20	30	2	**3 842 543 333**	FS1, FS2, FS4
	30	30	2	**3 842 543 332**	2xFS2, FS4
	30	40	2	**3 842 543 331**	FS2, FS3, FS4
	30	45	2	**3 842 543 330**	FS2, FS3, FS4
	40	40	2	**3 842 543 329**	2xFS3, FS4
	45	45	2	**3 842 543 328**	2xFS3, FS4
left	20	20	2	**3 842 543 327**	2xFS1, FS4
	20	30	2	**3 842 543 326**	FS1, FS2, FS4
	30	30	2	**3 842 543 325**	2xFS2, FS4
	30	40	2	**3 842 543 324**	FS2, FS3, FS4
	30	45	2	**3 842 543 323**	FS2, FS3, FS4
	40	40	2	**3 842 543 322**	2xFS3, FS4
	45	45	2	**3 842 543 321**	2xFS3, FS4

Material: Hinge: diecast aluminum, painted
Fastening material: steel; galvanized
Grooved pin: steel; galvanized
Washer: PA

Scope of delivery: Incl. fastening material (FS)

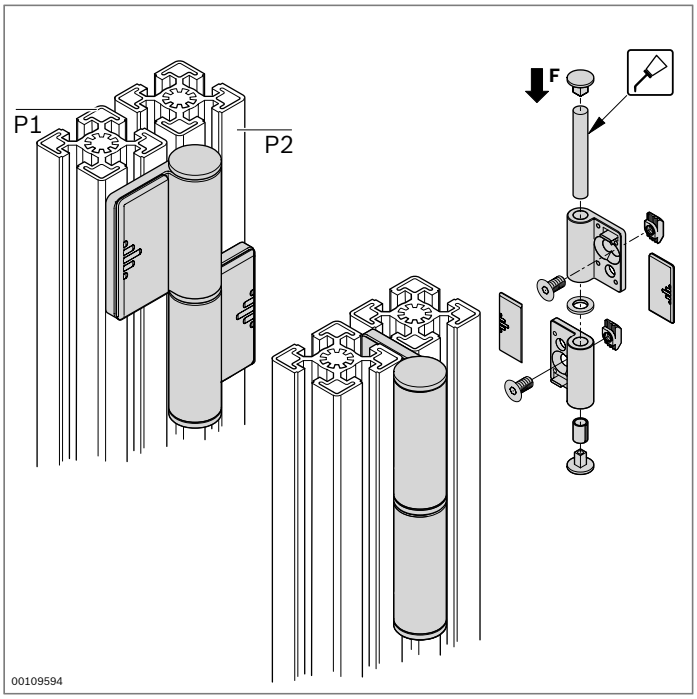

Hinge, removable

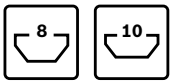

- For constructing large, heavy doors
- Removable
- For left and right stop
- Externally mounted: Opening angle approx. 180°
- Internally mounted: prevents removal by unauthorized persons, e.g. on protective barriers

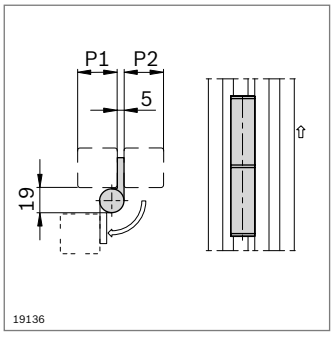

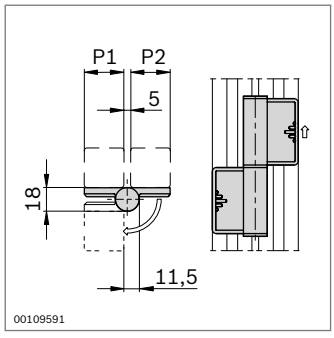

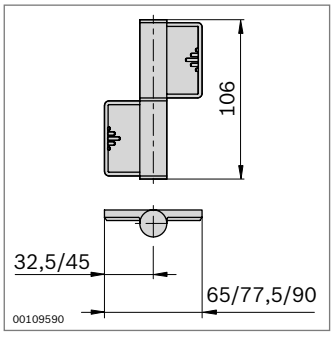

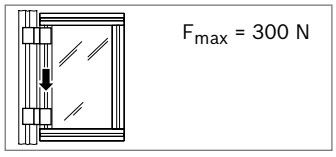

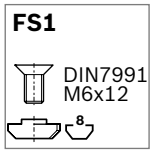

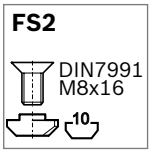

Hinge, removable	P1 (mm)	P2 (mm)		No.	FS
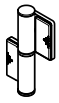	30	30	2	**3 842 544 552**	2xFS1
	30	45	2	**3 842 544 553**	1xFS1,
	30[1)]	60			1xFS2
	45	45	2	**3 842 544 554**	2xFS2
	45[1)]	60			
	60[1)]	60			

[1)] Not suitable for installing on inner side

Material: Hinge: diecast zinc
Cap: PA; black
Fastening material: steel; galvanized

Scope of delivery: Incl. fastening material (FS), 2 x cap

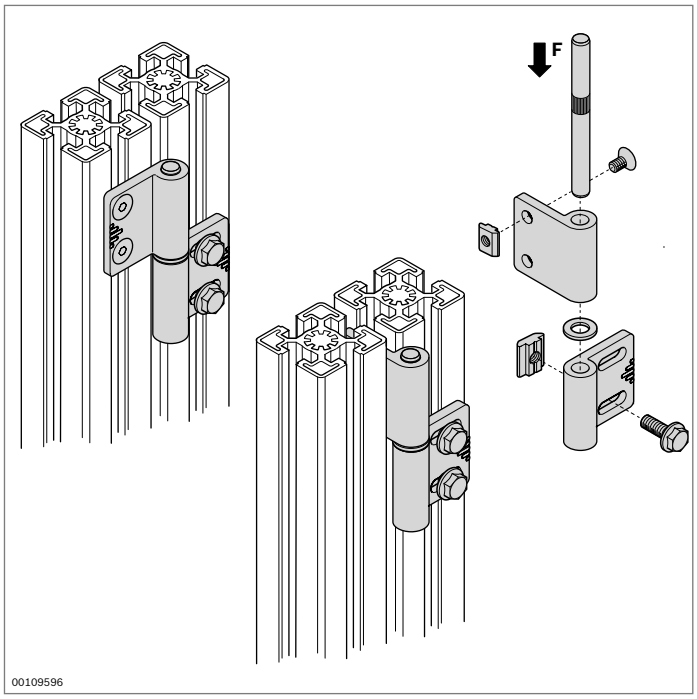

Hinge, adjustable

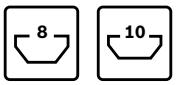

- For constructing large, heavy doors
- Adjustable for compensating clearance tolerances
- Removable
- For left and right stop
- Opening angle approx. 180°

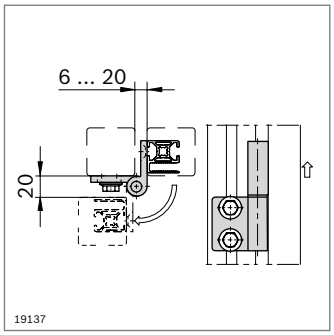

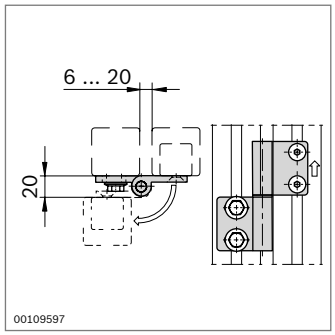

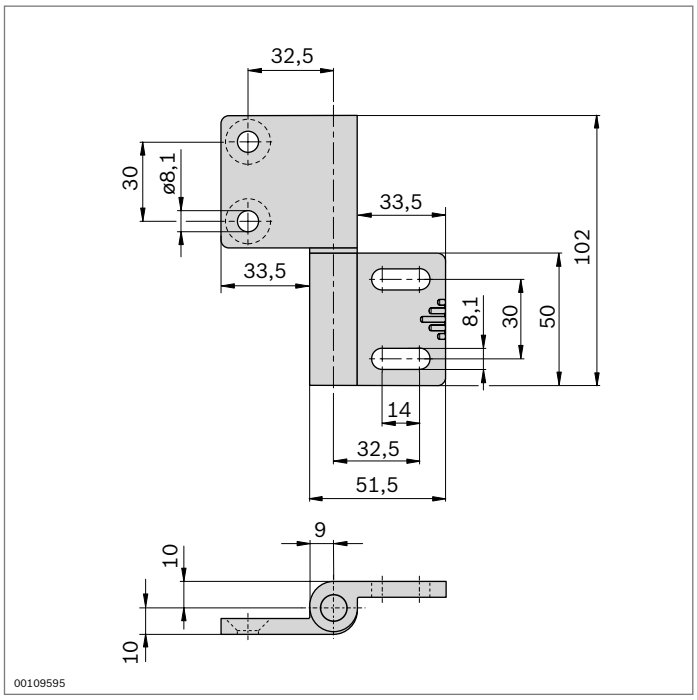

Hinge, adjustable		No.	FS
	2	**3 842 544 562**	2xFS1, 2xFS2

Material: Diecast aluminum
Fastening material: steel; galvanized
Scope of delivery: Incl. fastening material (FS)

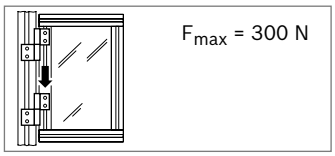

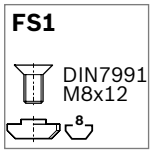

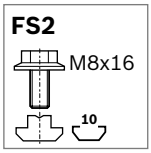

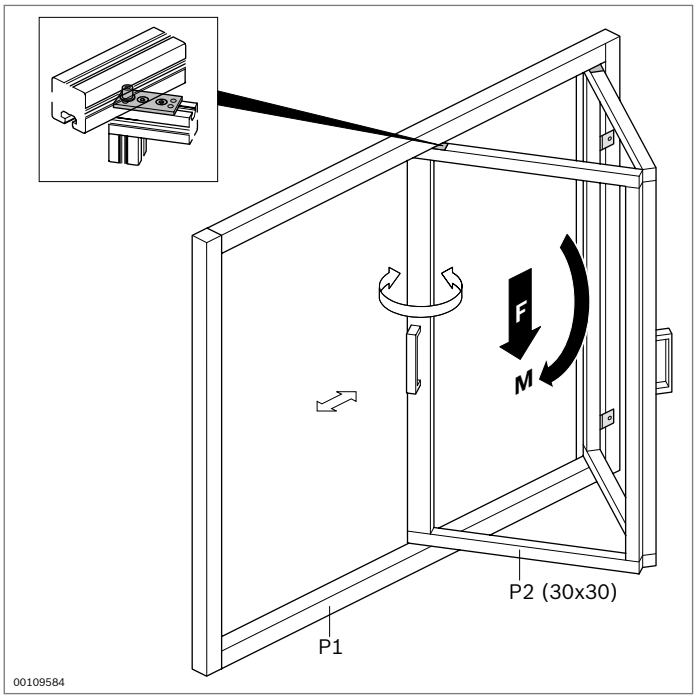

Folding door element

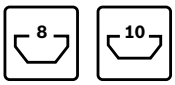

- For a simultaneous swinging and sliding action on folding doors made of 30 mm profiles
- Extremely long service life (approx. 50,000 actuations)
- Suitable for frames made of profiles with 8 mm and 10 mm slot
- The frame and door profile are always flush (the guide ring position depends on the thickness of the frame profile)

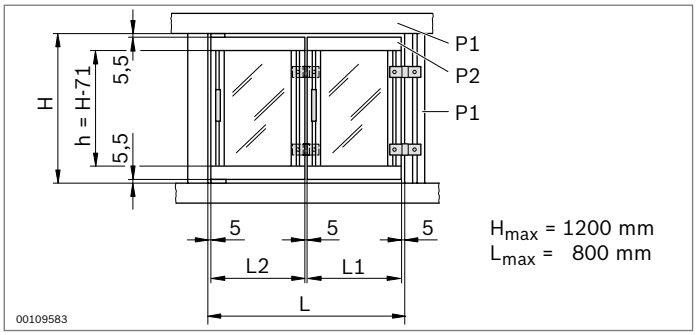

P2 (mm)	**P1** (mm)	**L1** (mm)	**L2** (mm)
30X30	45x45	0.5L - 29.5	0.5L + 14.5
	40x40	0.5L - 28.3	0.5L + 13.3
	30x30	0.5L - 25.8	0.5L + 10.8

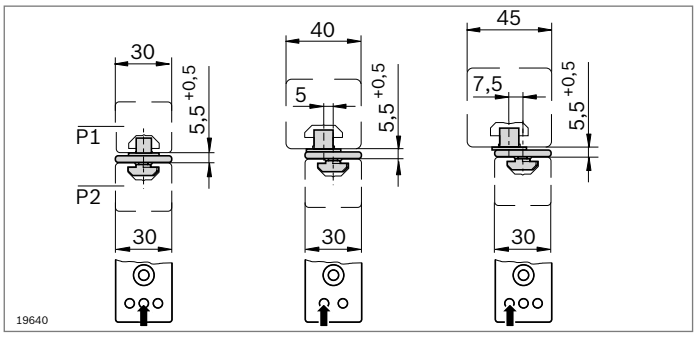

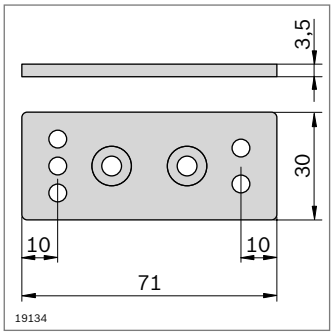

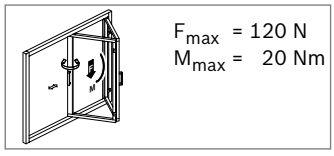

FS1

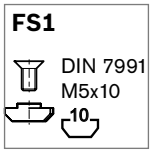

Folding door element	**No.**	**FS**
	3 842 516 715	2xFS1

Material: Folding door element: diecast zinc
Guide ring: PA; black
Fastening material: steel; galvanized

Scope of delivery: Incl. fastening material (FS)

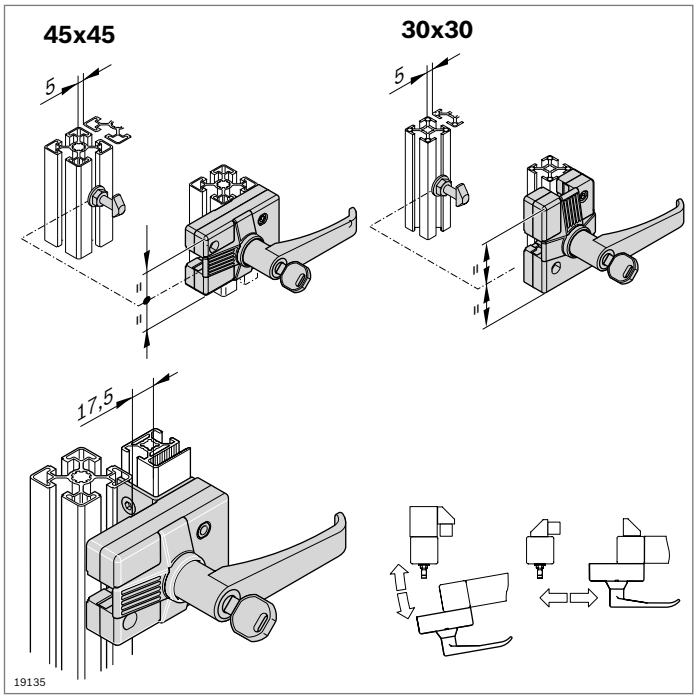

Lock for swing and sliding doors

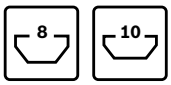

- Opening to the right and left
- Suitable for profiles 45x45 and 30x30
- “Standard locking” variant with random key selection (each lock has a different key)
- “Uniform locking” always uses the same key
- Version with door handle or as two-way lock

Accessories:
Adapter plate

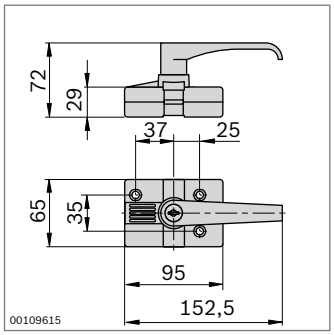

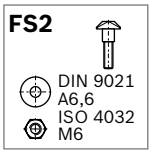

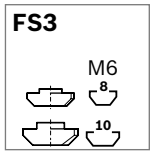

Door lock		No.	FS
Standard locking	30x30, 45x45	**3 842 525 821**	2xFS1, 1xFS2, 3xFS3
Uniform locking	30x30, 45x45	**3 842 525 822**	2xFS1, 1xFS2, 3xFS3

Material: Housing: die-cast aluminum
Door handle: PA, black
Fastening material: steel; galvanized
Scope of delivery: Incl. 3 keys,
Fastening material (FS)

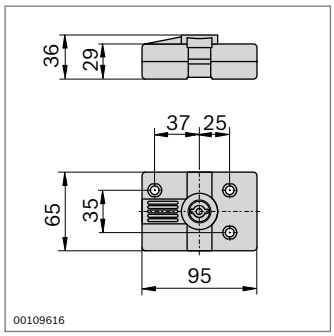

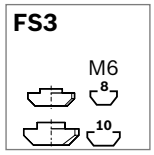

Door lock		No.	FS
	30x30, 45x45	**3 842 525 823**	2xFS1, FS2, 3xFS3

Material: Diecast aluminum
Fastening material: steel; galvanized
Scope of delivery: Incl. 1 x two-way key, fastening material (FS)

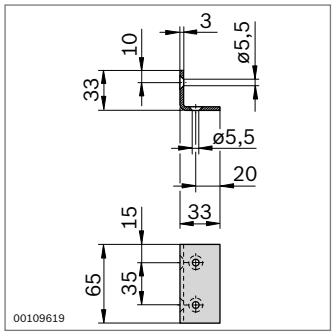

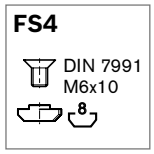

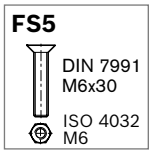

- Adapter plate for mounting the door lock on an EcoSafe protective frame (p. 10-4)

Adapter plate	No.	FS
	3 842 523 243	2xFS4, 2xFS5

Material: Steel, galvanized
Fastening material: steel; galvanized
Scope of delivery: Incl. fastening material (FS)

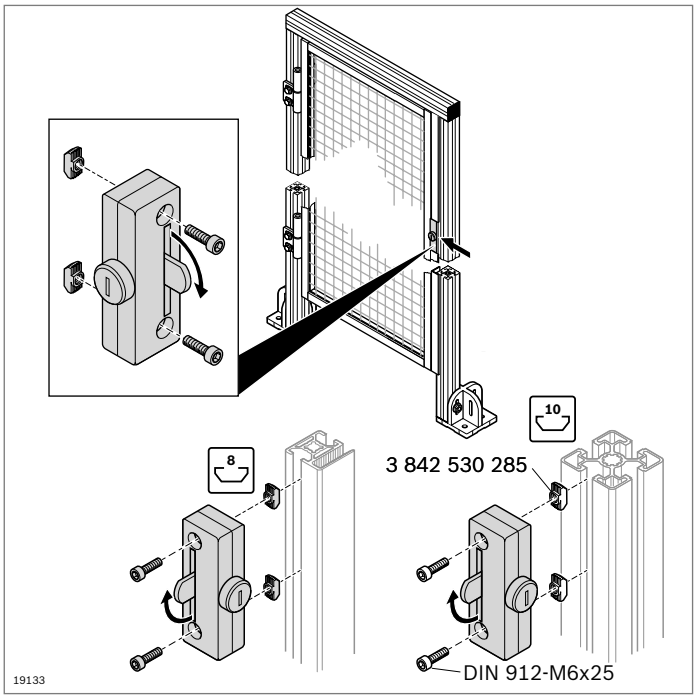

Door lock

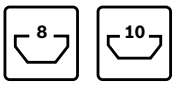

- For doors which open to the right or left
- For frame profile 30x30 WG (EcoSafe protective fence system); incl. fastening material
- “Standard locking” variant with random key selection (each lock has a different key)
- “Uniform locking” variant always has the same key

Accessories for mounting on profile with 10 mm slot:

- 2 x T-nut M6, **3 842 530 285** (p. 3-4)
- 2 x screw DIN 912-M6x25

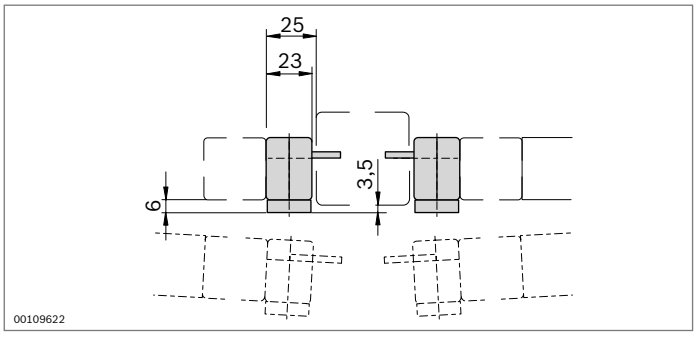

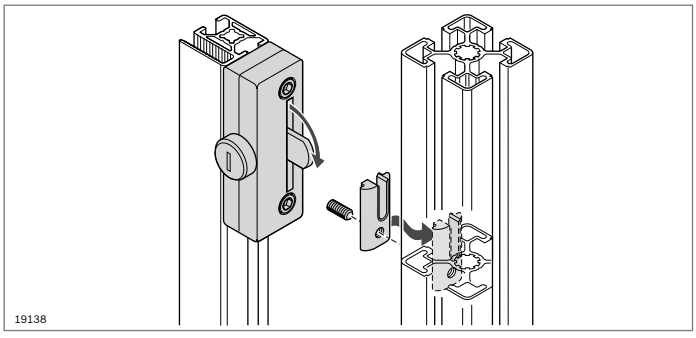

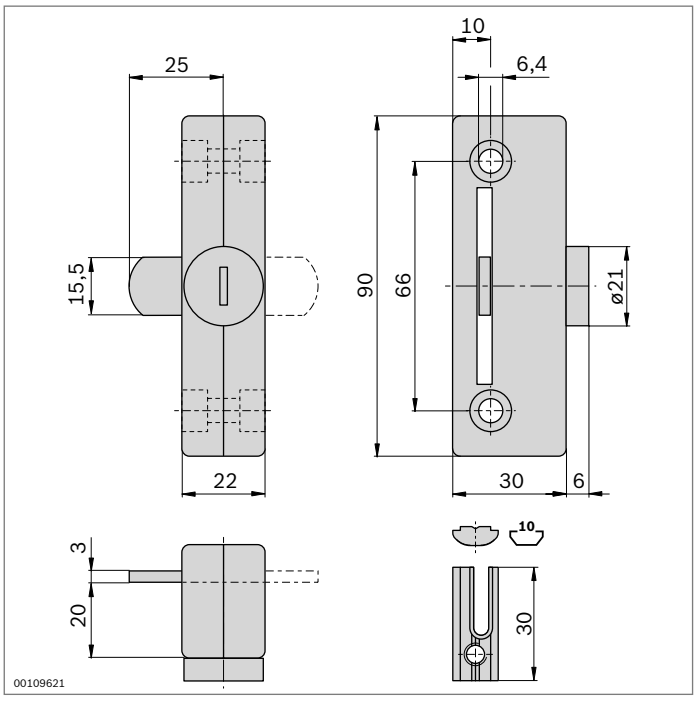

Door lock	No.	FS
Standard locking	**3 842 522 479**	2xFS1, 1xFS2
Uniform locking	**3 842 523 320**	2xFS1, 1xFS2

Material: Diecast zinc
Fastening material: steel; galvanized

Scope of delivery: Incl. 3 keys,
Fastening material (FS)

FS1

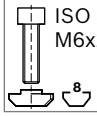

ISO 4762
M6x22

FS2

DIN 914
M6x10

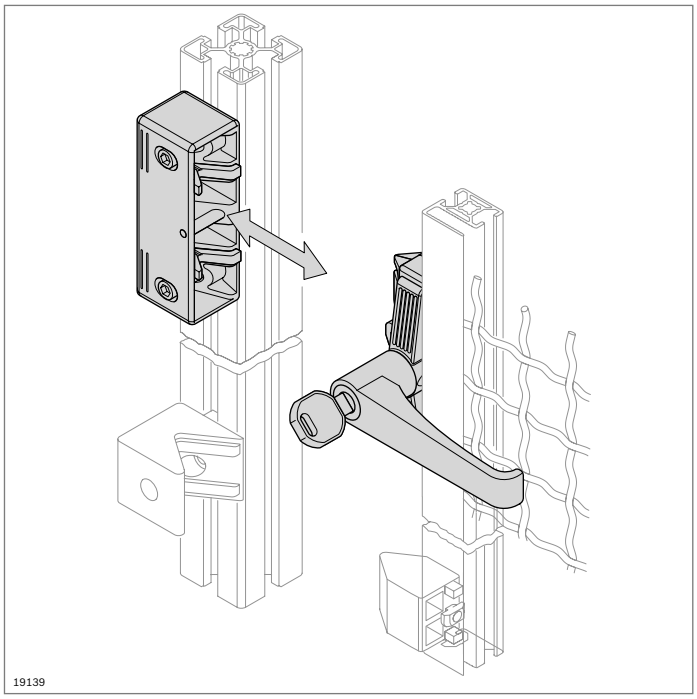

Door lock for EcoSafe sliding doors

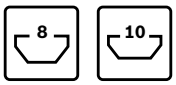

- For doors which open to the right or left
- “Standard locking” variant with random key selection (each lock has a different key)
- “Uniform locking” variant always has the same key

Accessories, optional:
Stop kit for cushioned closing of the doors (p. 12-5)

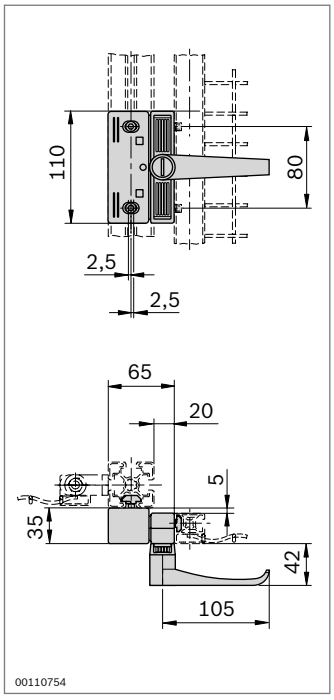

FS1

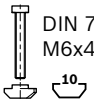

DIN 7984
M6x40

FS2

DIN 912
M6x12

Door lock for sliding doors	No.	FS
Standard locking	**3 842 525 946**	2xFS1, 2xFS2
Uniform locking	**3 842 525 947**	2xFS1, 2xFS2

Material:	Housing: die-cast aluminum Door handle: PA, black Fastening material: steel; galvanized
Scope of delivery:	Incl. 3 keys, Fastening material (FS)

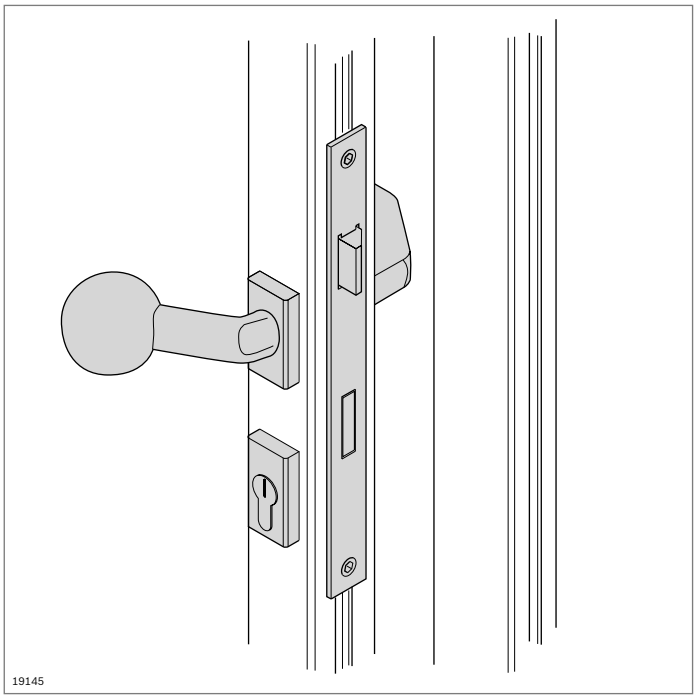

Mortise lock
Door handle

- For installation in profile size 45x45 or larger
- Robust, heavy-duty design
- Suitable for installing a standard lock cylinder
- Door handle in the variants handle/handle and handle/knob
- Profile machining: milling

Accessories:
standard lock cylinder

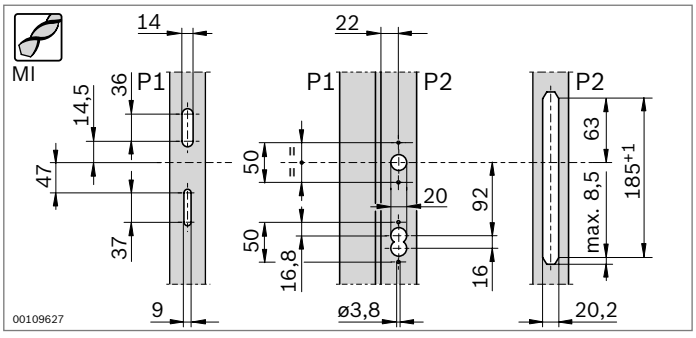

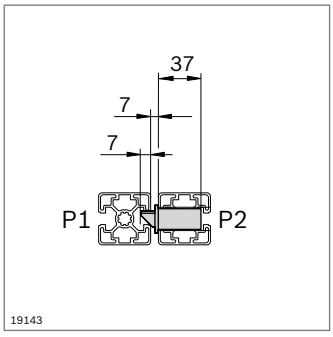

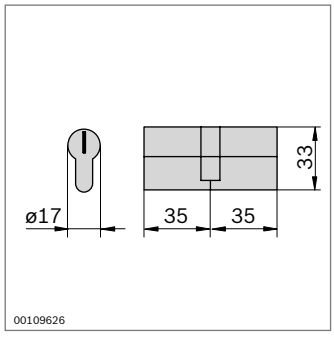

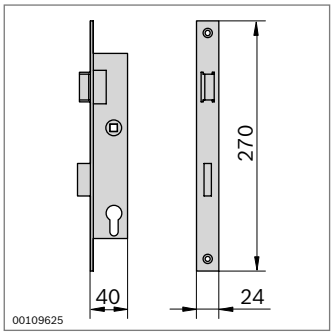

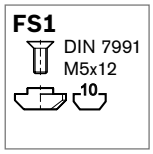

Mortise lock	No.	FS
	3 842 538 241	2xFS1

Material: Steel; galvanized
Scope of delivery: Incl. fastening material (FS)

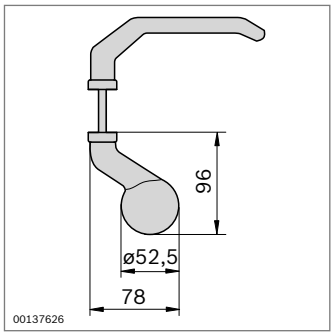

FS2

ISO 7051
4,8x22

FS3

DIN 7991
M5x10
10

Door handle / door knob	No.	FS
	3 842 542 684	8xFS2, 8xFS3

Material: Light metal
Fastening material: steel; galvanized
Scope of delivery: Incl. rosette, fastening material (FS)

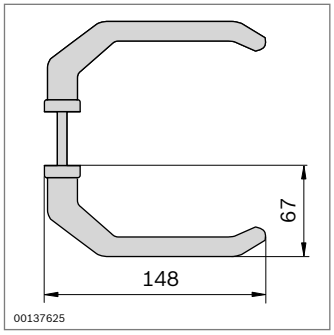

FS2

ISO 7051
4,8x22

FS3

DIN 7991
M5x10
10

Handle/handle	No.	FS
	3 842 542 683	8xFS2, 8xFS3

Material: Light metal
Fastening material: steel; galvanized
Scope of delivery: Incl. rosette, fastening material (FS)

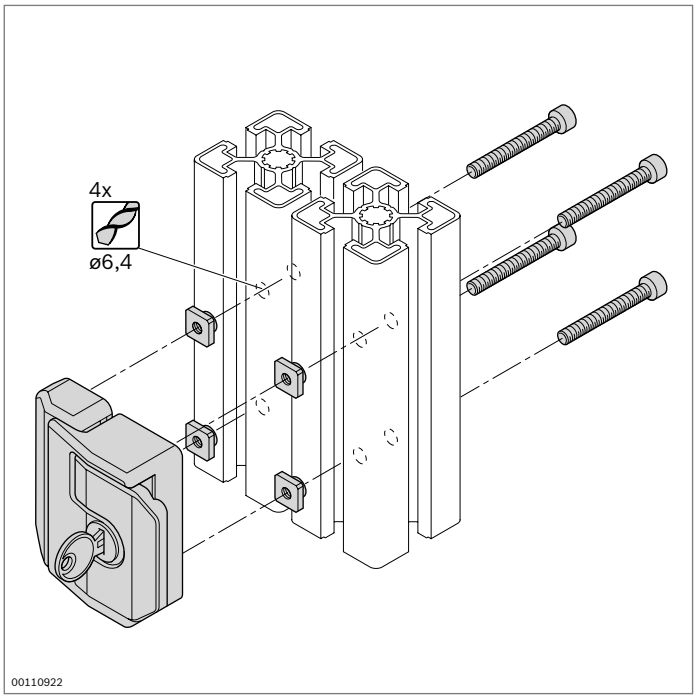

Door lock for swing doors

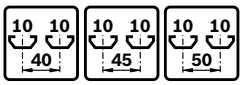

- For doors which open to the right or left
- Self-locking in the closed position
- Smooth closing
- Ergonomically designed folding handle for opening
- “Standard locking” variant with random key selection (each lock has a different key)
- “Uniform locking” variant always has the same key
- Profile machining: drilling of hole D6.4

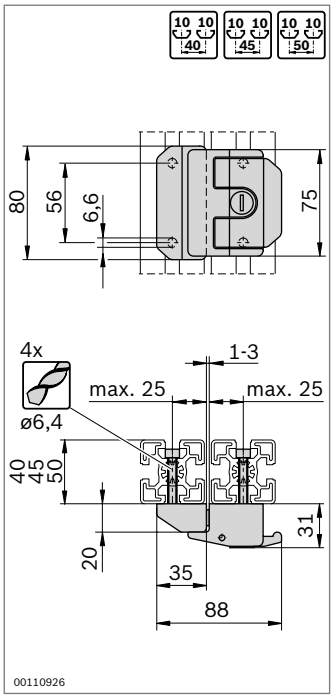

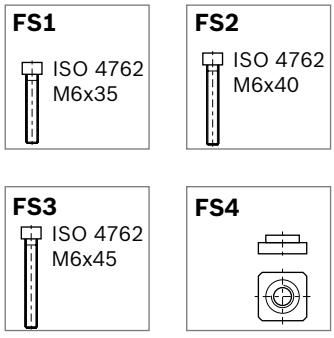

Door lock	No.	FS
Standard locking	**3 842 530 353**	4xFS1, 4xFS2, 4xFS3, 4xFS4
Uniform locking	**3 842 530 352**	4xFS1, 4xFS2, 4xFS3, 4xFS4

Material: diecast zinc; black powder-coated
Fastening material: steel; galvanized
Scope of delivery: Incl. 2 keys,
Fastening material (FS)

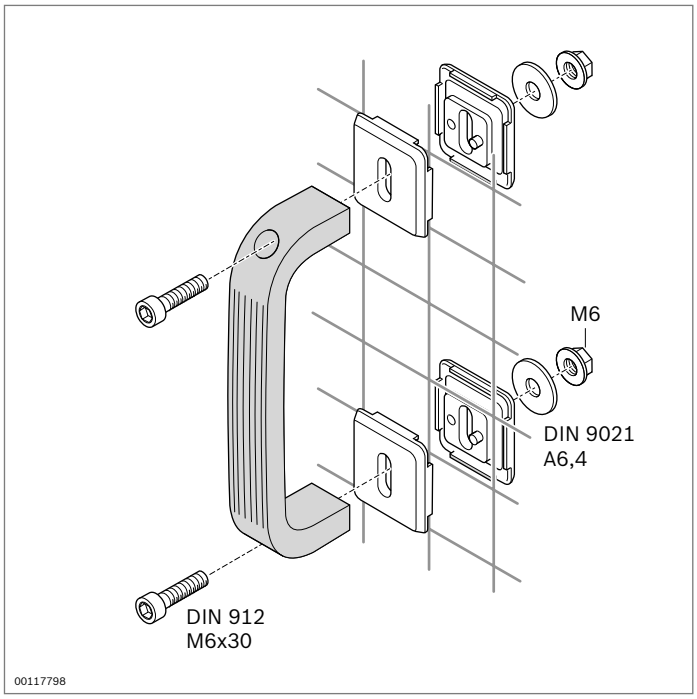

Bow-type handle

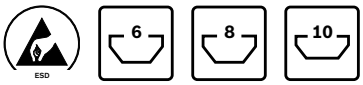

Bow-type handle

- Robust construction equipped to withstand strong forces
- Fastening in the profile slot or on a woven wire grille with the clamping element
- Suitable for use in ESD-protected environments

Accessories, optional:

- clamping element for mounting on woven wire grille (p. 10-19)
- T-nut (p. 3-4)

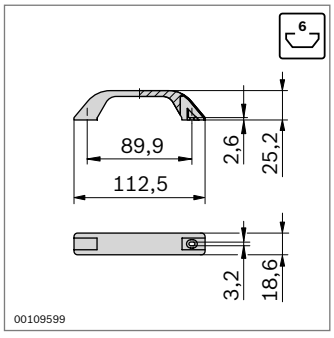

Bow-shaped handle		No.
	10	**3 842 518 738**

Material: PE; black

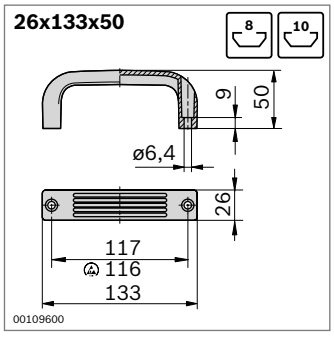

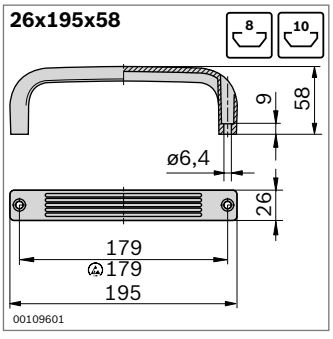

Bow-shaped handle	ESD		No.
26x133x50		10	**3 842 525 480**
	ESD	10	**3 842 525 481**
26x195x58		10	**3 842 525 766**
	ESD	10	**3 842 525 767**

Material: PA; black

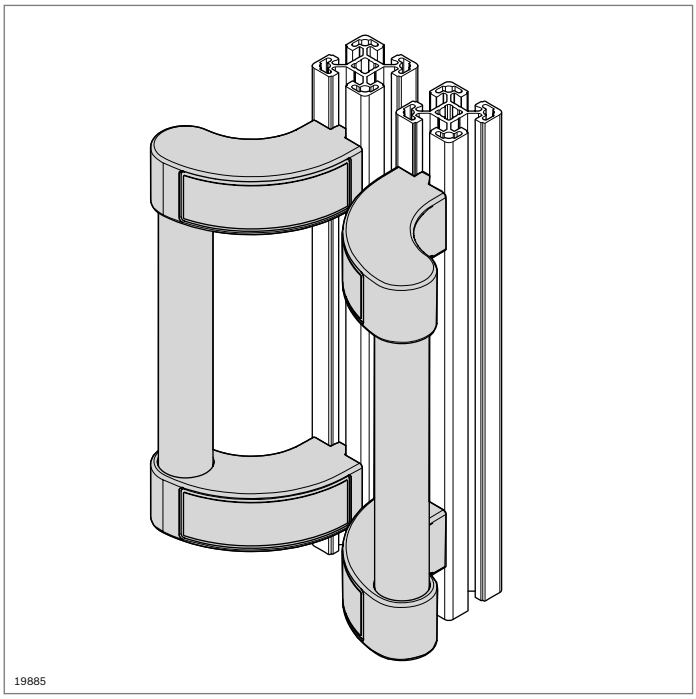

Safety handle

- Prevents injuries caused by catching of body parts when closing sliding doors
- Suitable for sliding or swing doors
- The length of the handle can be varied by changing the tube D28

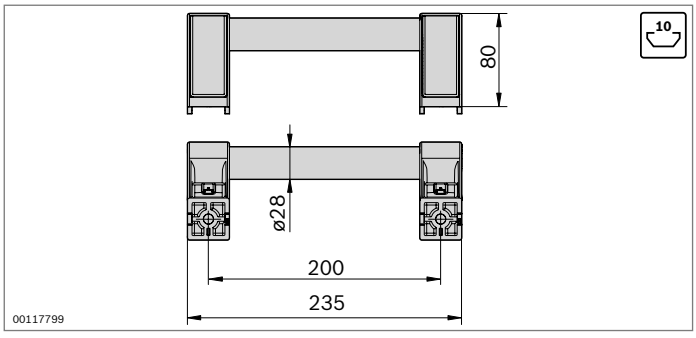

Safety handle	No.	FS
	3 842 536 556	2xFS1

Material: Round tube D28: Aluminum, anodized
Holder: PA; black

Scope of delivery: Incl. fastening material (FS)

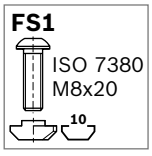

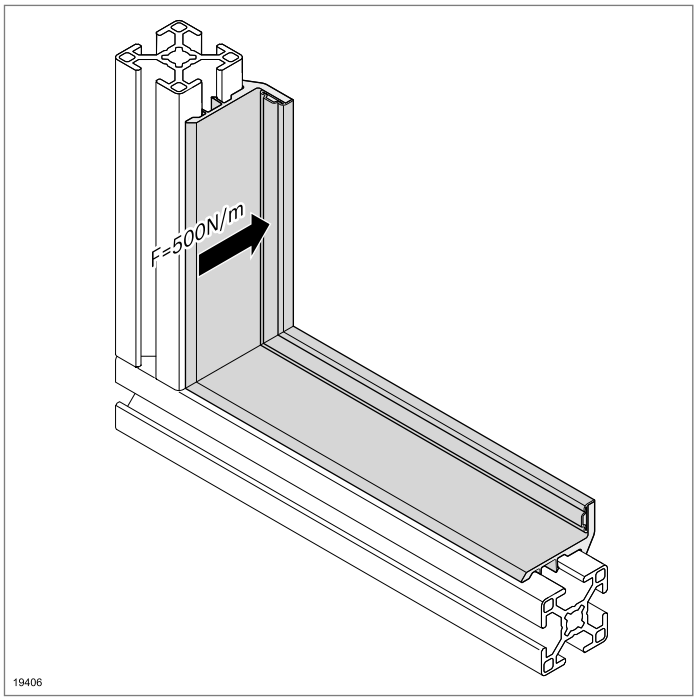

Sealing strip

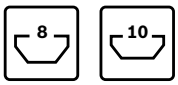

- For sealing doors (width > 500 mm) with an elastic lip seal
- Can be clipped into the slot
- Non-transparent elastic lip seal covers the door gap
- Stop for swing doors (impact force: 500 N/m)
- For flush-closing doors

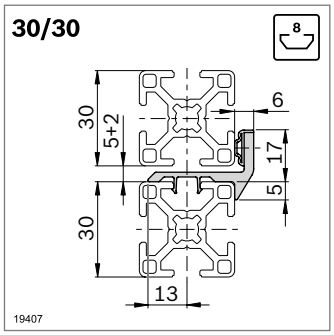

Sealing strip	L (mm)		No.
30/30	3000	10	**3 842 543 412**
Material:	PVC/TPE, light gray RAL 7035		

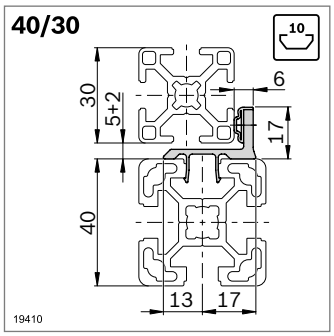

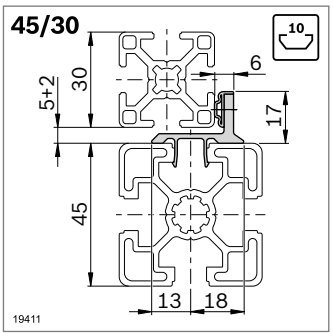

Sealing strip	L (mm)		No.
40/30	3000	10	**3 842 543 411**
45/30	3000	10	**3 842 543 410**
Material:	PVC/TPE, light gray RAL 7035		

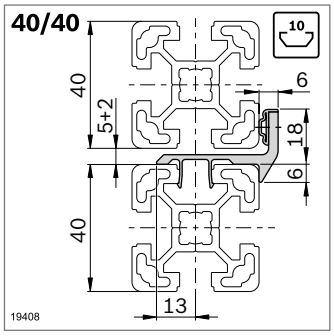

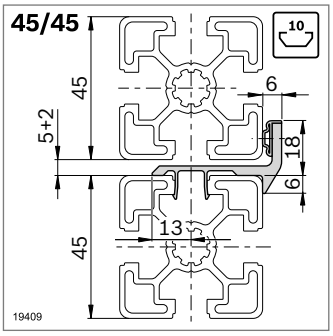

Sealing strip	L (mm)		No.
40/40	3000	10	**3 842 543 409**
45/45	3000	10	**3 842 543 408**
Material:	PVC/TPE, light gray RAL 7035		

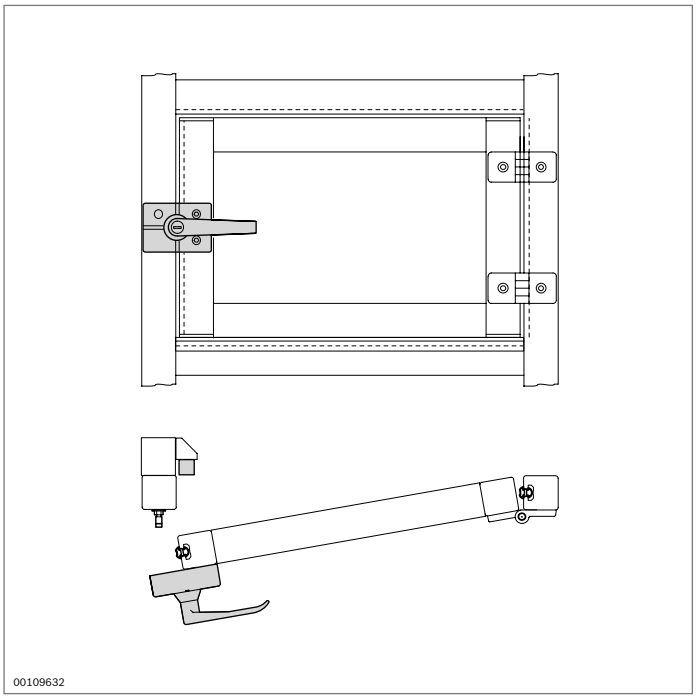

Sealing profile

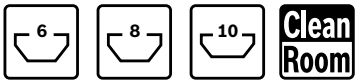

- For sliding and swing doors
- Prevents particles from entering or escaping

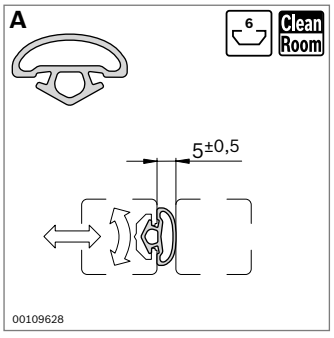

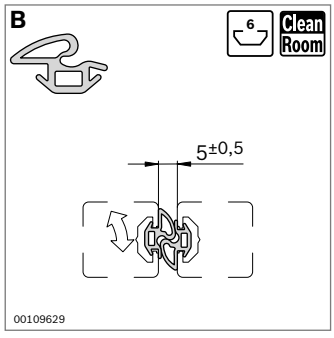

- Suitable for use in cleanroom environments
- Two-piece seal (**B**) also performs a stop function.

Sealing profile	Slot	L (mm)	No.
A	6	10000	**3 842 524 623**
B	6	10000	**3 842 524 622**

Material: TPE; light gray RAL 7035, hardness: 64° ± 5 shore A

Fraunhofer
IPA
TESTED DEVICE
Bosch Dichtung 3842524623
Report No. BO 9903-157

Fraunhofer
IPA
TESTED DEVICE
Bosch Dichtung 3842524622
Report No. BO 9903-156

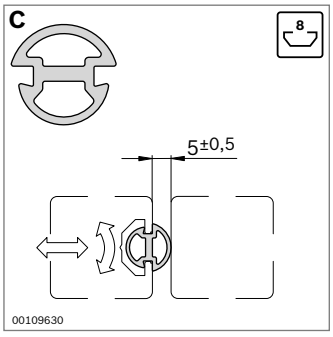

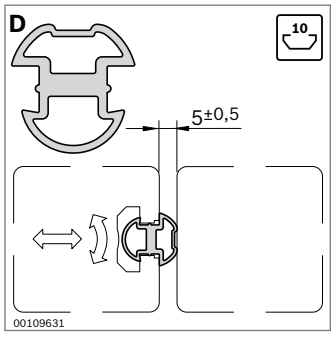

Sealing profile	Slot	L (mm)	No.
C	8	10000	**3 842 516 598**
D	10	10000	**3 842 518 492**

Material: NBR; black, hardness 60° shore A

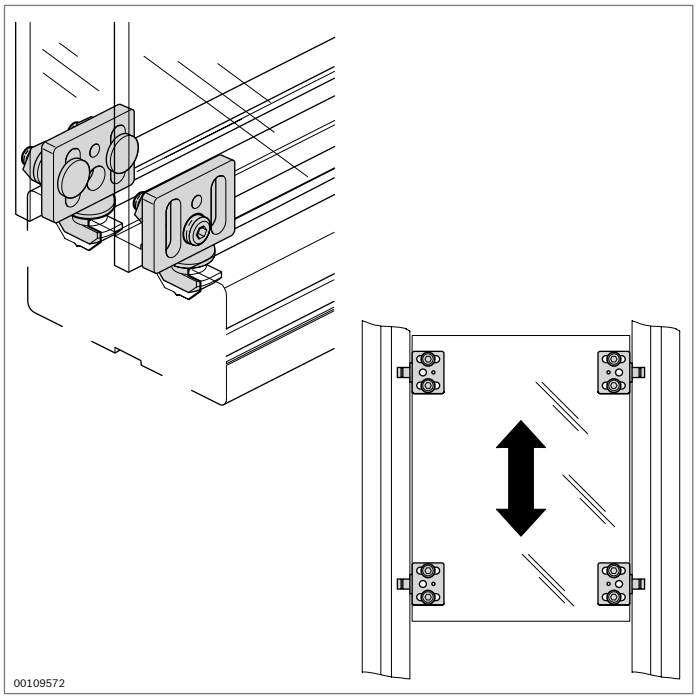

Slider

10

- For constructing inexpensive sliding and lifting doors
- Good functional reliability

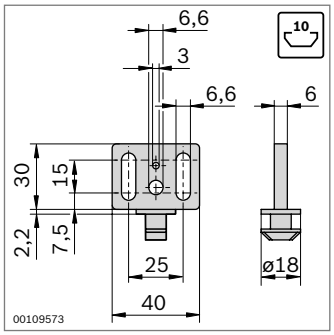

Slider		No.
	10	**3 842 530 303**
Material:	POM; black	

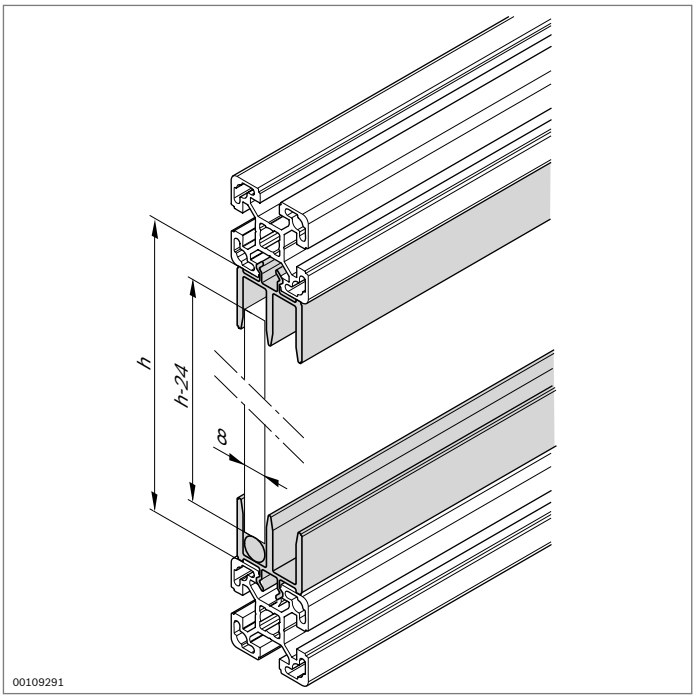

Sliding door profile PVC

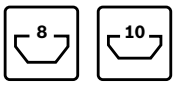

- Can be clipped into the supporting frame made of strut profiles
- Round rod to minimize the displacement force required
- For surface elements of a thickness of 8 mm
- Insertion of the surface element into closed frame

Accessories, optional:

- Edge protector (p. 8-26)
- Door handle profile (p. 8-26)
- Bow-type handle (p. 8-17)

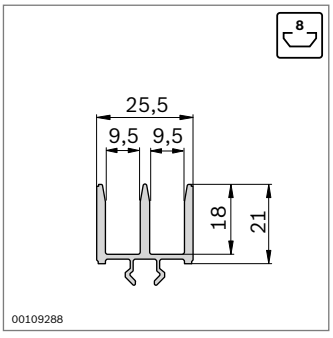

Sliding door profile PVC	Slot	L (mm)		No.
	8	2000	10	**3 842 526 588**

Material: PVC; black

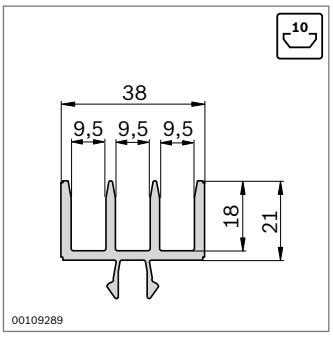

Sliding door profile PVC	Slot	L (mm)		No.
	10	2000	10	**3 842 526 591**

Material: PVC; black

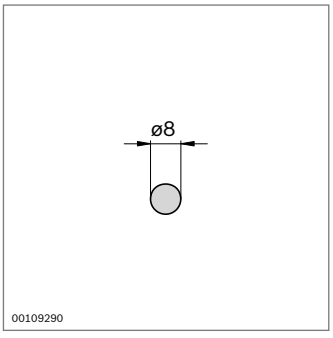

Round rod	L (mm)		No.
	2000	10	**3 842 516 694**

Material: PE; black

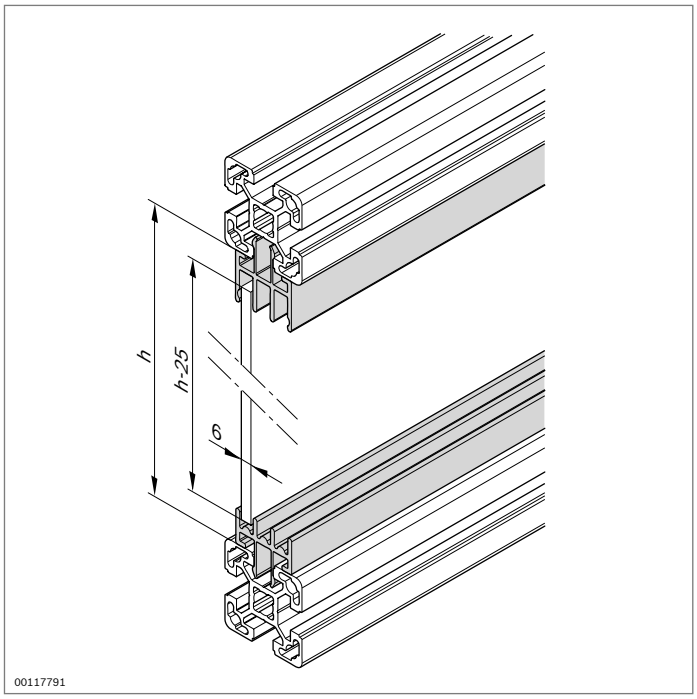

Sliding door profile Al Clip

- Can be clipped into the supporting frame made of strut profiles
- Sliding door profile, bottom, with half-round floor contour to minimize the displacement force required
- For surface elements with a thickness of 5 or 6 mm
- Insertion of the surface element into closed frame

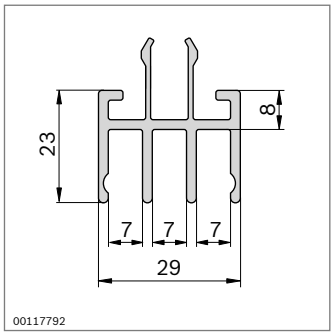

Sliding door profile, top		L (mm)	No.
1 pc		40 ... 3000	**3 842 993 425 / L**
10 pcs		3000	**3 842 536 531**

Material: Aluminum, anodized

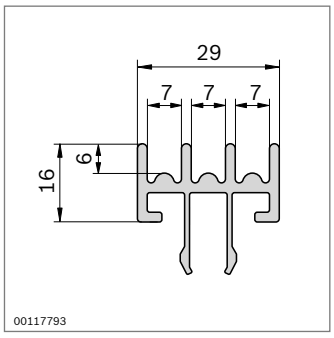

Sliding door profile, bottom		L (mm)	No.
1 pc		40 ... 3000	**3 842 993 426 / L**
10 pcs		3000	**3 842 536 532**

Material: Aluminum, anodized

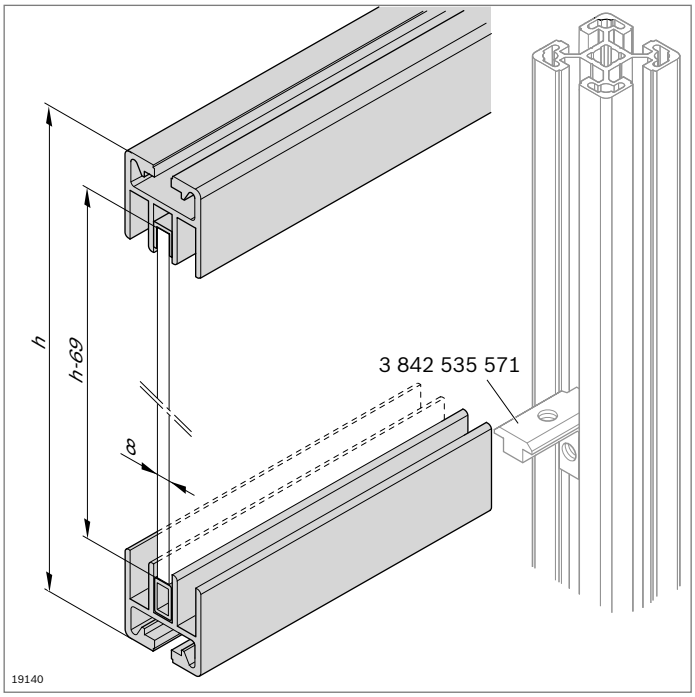

Sliding door profile Al 45
Cap, end piece

Sliding door profile Al 45

- Aluminum profile as a supporting construction element
- Installation using inner brackets between two vertical struts
- Slide profile to edge the upper part of the sliding door
- Insertion profile acts as a slide surface
- For surface elements of a thickness of 8 mm
- Insertion of the surface element into closed frame

Accessories:

- cap (p. 8-25)
- end piece (p. 8-25)
- inner bracket (p. 3-13), inner bracket R (p. 3-14)

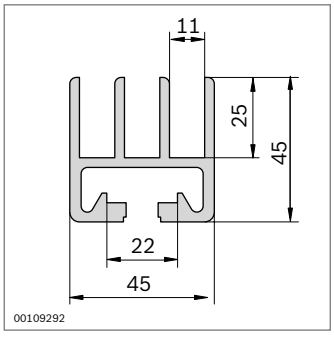

Sliding door profile		L (mm)	No.
1 pc		100 ... 5600	**3 842 990 115 / L**
1 pc	F1 F1	100 ... 5600	**3 842 990 116 / L**
20 pcs		5600	**3 842 509 177**

Material: Aluminum, anodized

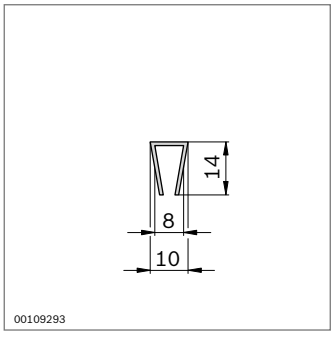

Slide profile	L (mm)		No.
	3000	10	**3 842 146 905**

Material: Hard PVC, black

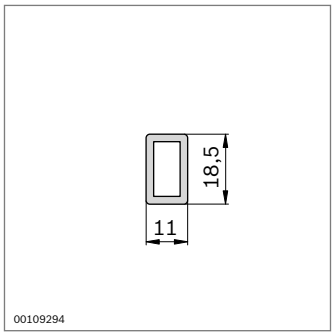

Insertion profile	L (mm)		No.
	3000	10	**3 842 146 902**

Material: PA; black

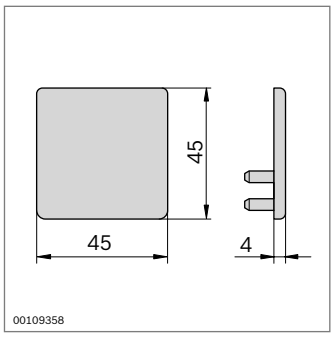

Cover cap

- As a design element and to prevent injuries

Cover cap	ESD		No.
		20	**3 842 242 404**

Material: PA, conductive, black

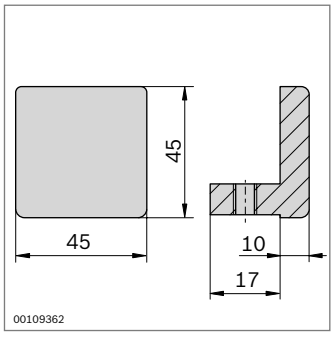

FS1

DIN 916
M8x16

End piece

- For use as a stop for sliding elements
- Clamping with setscrew in the profile slot

End piece	ESD		No.	FS
		20	**3 842 191 194**	FS1

Material: Die-cast aluminum
Scope of delivery: Incl. fastening material (FS)

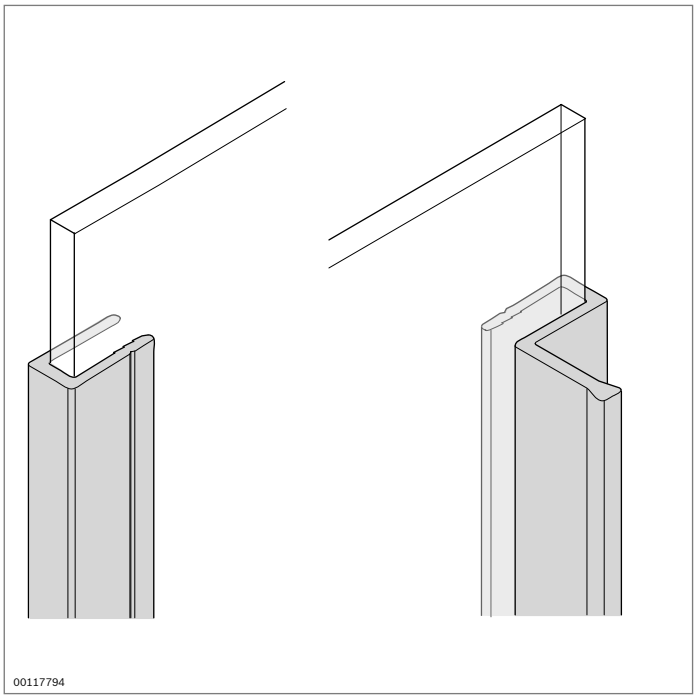

Edge protector
Door handle profile

- For reinforcing frameless surface elements on sliding doors
- Profile for s = 6 mm can also be used for 1/4 inch plates

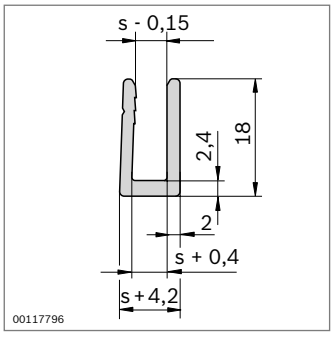

Edge protector		s (mm)	L (mm)	No.
1 pc		5	40 ... 3000	**3 842 993 429 / L**
10 pcs		5	3000	**3 842 536 537**
1 pc		6	40 ... 3000	**3 842 993 430 / L**
10 pcs		6	3000	**3 842 536 540**

Material: Aluminum, anodized

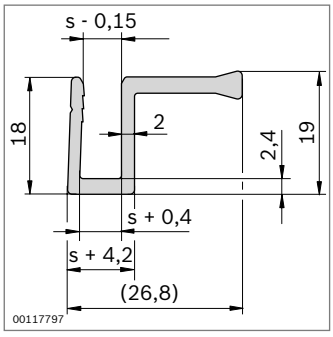

Door handle profile		s (mm)	L (mm)	No.
1 pc		5	40 ... 3000	**3 842 993 427 / L**
10 pcs		5	3000	**3 842 536 533**
1 pc		6	40 ... 3000	**3 842 993 428 / L**
10 pcs		6	3000	**3 842 536 536**

Material: Aluminum, anodized

Accessories for protective devices

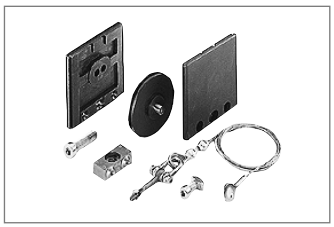

Counterbalance (p. 9-2)

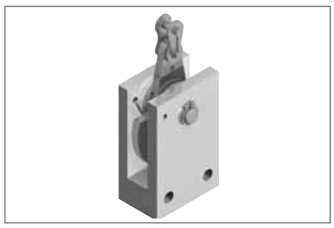

Safety catch (p. 9-4)

Bumper (see p. 9-5)

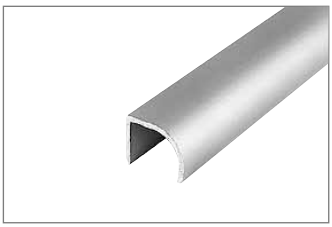

Handle bar (p. 9-5)

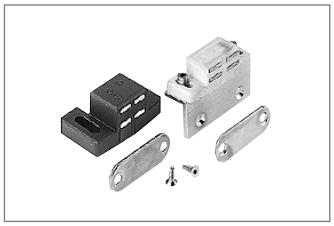

Magnet catch (p. 9-6)

Double ball stop latch (p. 9-7)

Ball catch (p. 9-8)

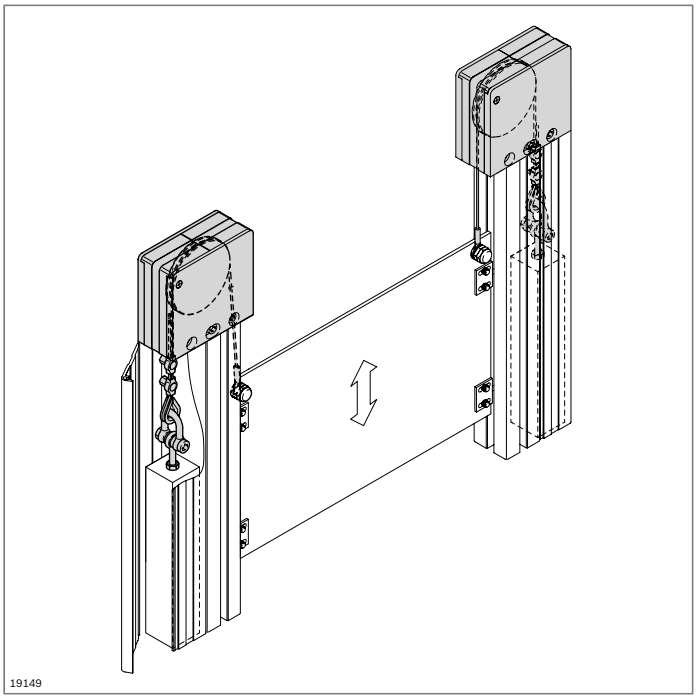

Counterbalance

- For lifting doors comprising a deflection pulley and control cable
- Counterweight individually adjustable and preferably guided in a cable duct
- Length of cable can be adjusted
- Service life: 50,000 actuations
- Profile machining:
  - M12 for fastening the deflection pulley
- Fit lifting doors with a back-up fall arrestor in accordance with the Machinery Directive 2006/42/EC

Accessories, required:
counterbalance weight (square profile 35x35 mm)

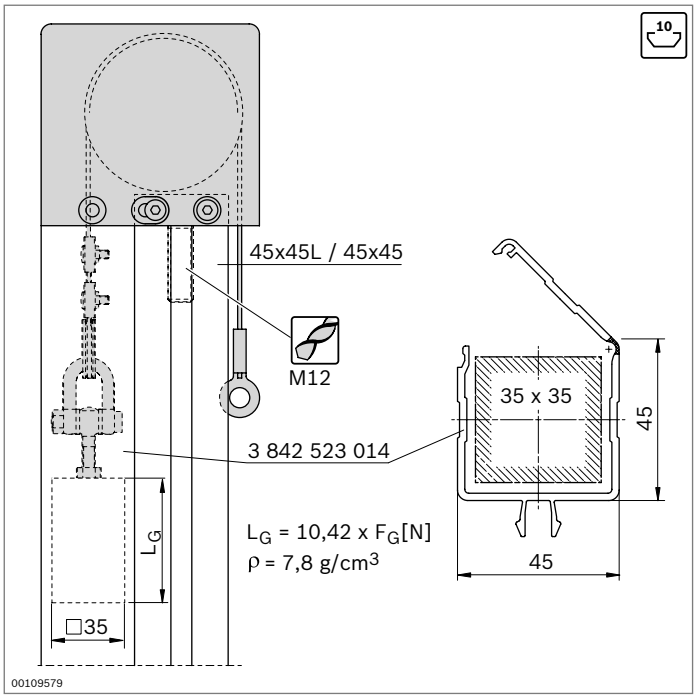

Accessories, optional:
- Cable duct 45x45 (p. 11-2)
- Slider (p. 12-3/8-21)
- Safety catch (p. 9-4)

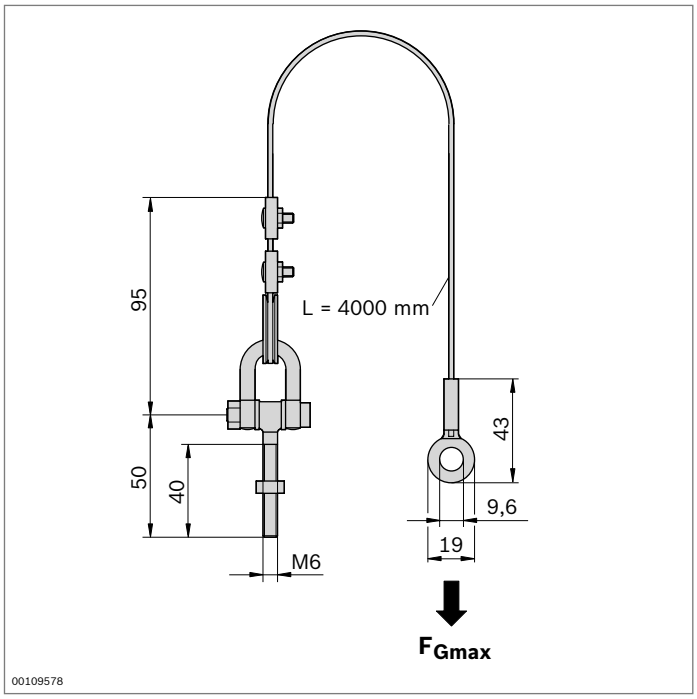

Counterbalance control cable	No.
	3 842 518 798

Material: Steel; stainless

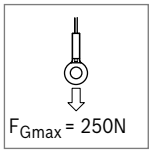

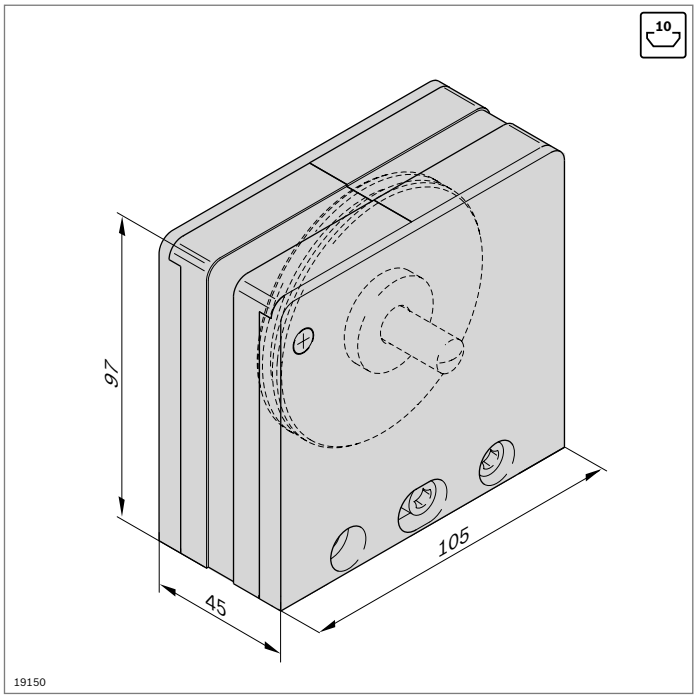

Counterbalance deflection pulley	No.	FS
	3 842 518 797	FS1, FS2

Material: Housing: PA; black
Fastening material: steel; galvanized

Scope of delivery: Incl. fastening material (FS)

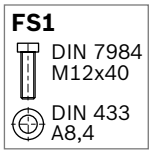

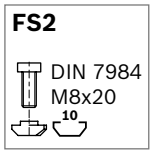

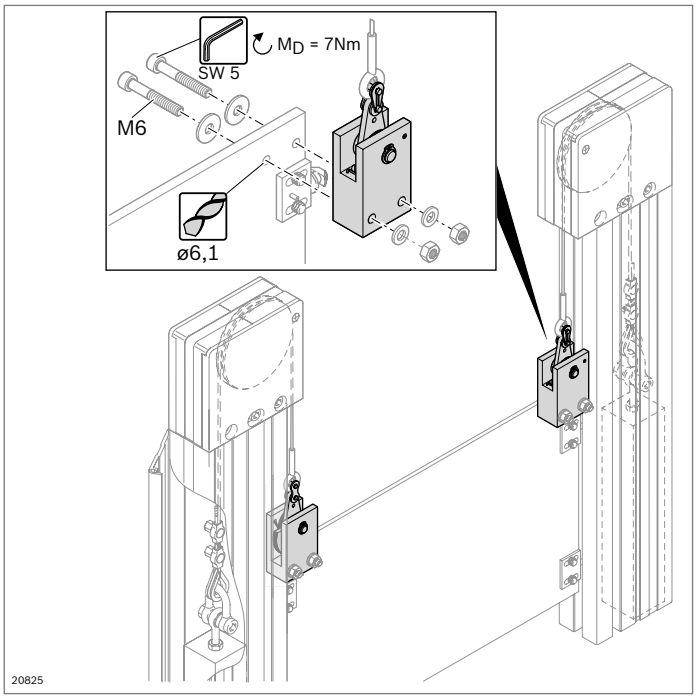

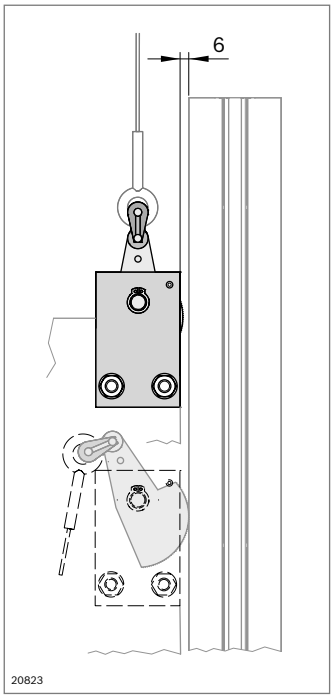

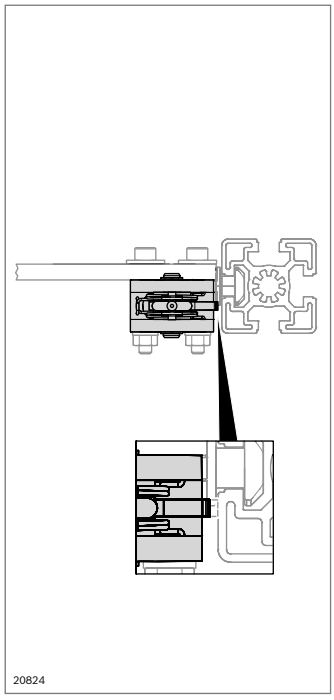

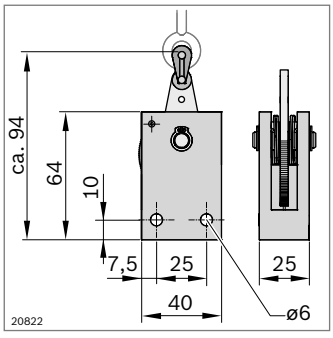

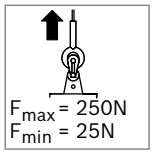

Safety catch

- The safety catch in conjunction with the other components prevents a lifting door from falling if a cable breaks
- If a cable breaks, the revolving part of the safety catch jams against a counterbearing and is wedged in position in the guide profile
- Gap dimension between safety catch body and lateral guide profile: 6 mm
- One safety catch is required for each cable.
  - Max. load per safety catch: 250 N
  - Min. load per safety catch: 25 N
- The counterbearing (e.g. slider **3 842 530 303**) should be mounted under the safety catch and as close as possible to it
- It can also be mounted without a frame on surface elements which have adequate transverse rigidity
- Before installation and use please read the data sheet containing notes on use which is enclosed with the product

Accessories, optional:

- Slider (p. 12-3)
- Fastening material for attaching the safety catch to the lifting door
- Counterbalance (p. 9-2)
- Strut profiles (from p. 2-1)

Safety catch		**No.**
		3 842 546 519
Material:	Housing: aluminum Rotating disk: steel, rust-free Bolt: steel, hardened Chain lock: steel, nickel-plated Spacer disk: POM	
Scope of delivery:	Incl. chain lock for securing the cable	
Condition on delivery:	Assembled	

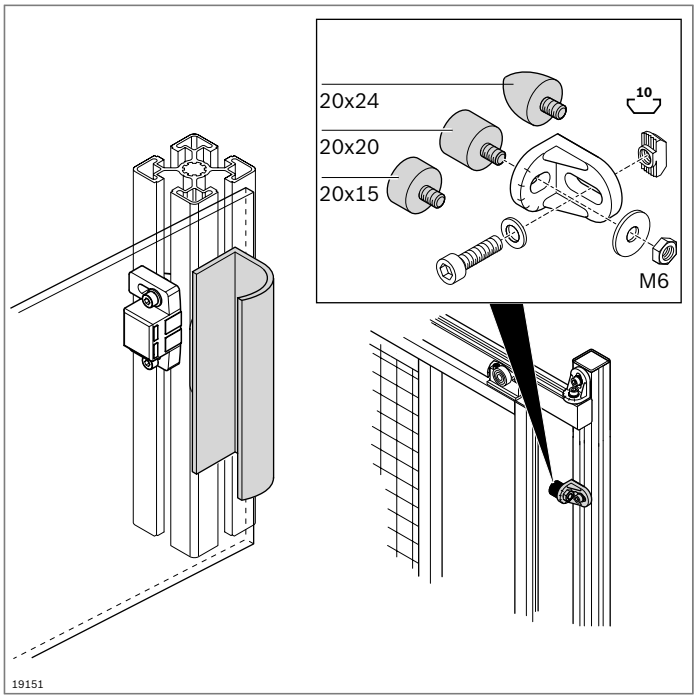

Bump stop
Handle bar

Bump stop

- For damping impact and noise on doors, flaps, and covers

Accessories:
nut, T-nut M6 (p. 3-4)

Handle bar

- Can be used, for example, on covers, drawers, or doors
- Machining: drilled holes for fixing

Accessories, required:
Fastening material

20x24

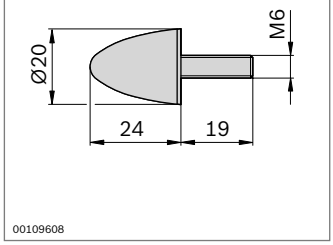

Bump stop		No.
20x24	10	**3 842 510 165**
Material:	Rubber, hardness 55° shore A	

20x15, 20x20

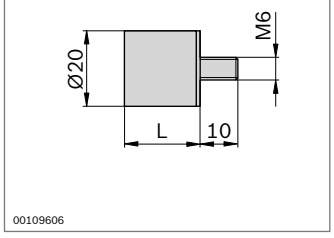

Bump stop	L (mm)		No.
20x15	15	10	**3 842 510 464**
20x20	20	10	**3 842 510 462**
Material:	Rubber, hardness 55° shore A		

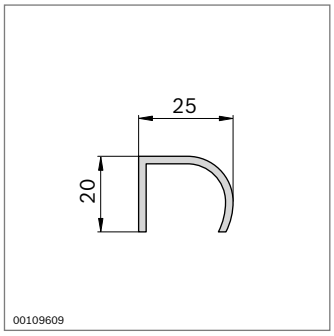

Handle bar	L (mm)		No.
	50...3000	1	**3 842 990 111 / L**
	3000	10	**3 842 500 287**
Material:	Aluminum, anodized		

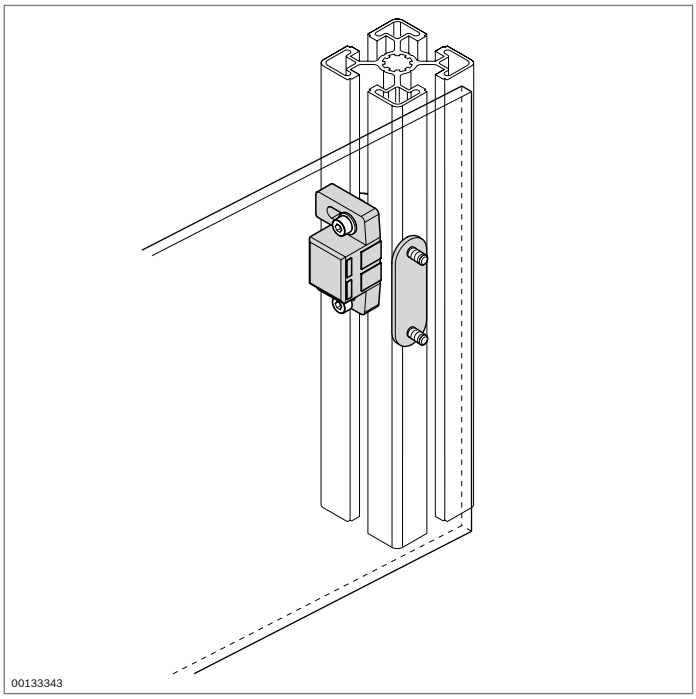

Magnet catch

- The magnet catch prevents doors and flaps from banging or being unintentionally opened
- Elongated holes to compensate for different surface element thicknesses

Accessories:
Cylinder bolt ISO 4762, washer, T-nut (p. 3-4)

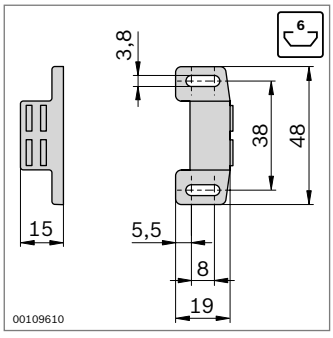

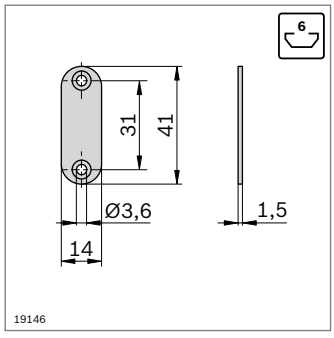

Magnet catch	Slot	No.	FS
	6	**3 842 518 740**	2xFS1

Material: PP, white / steel, galvanized
Scope of delivery: Incl. counterpiece, bracket, fastening material (FS)

FS1
ISO 4762 M3x8
DIN 125 A3,2

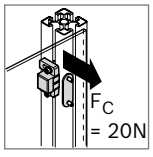

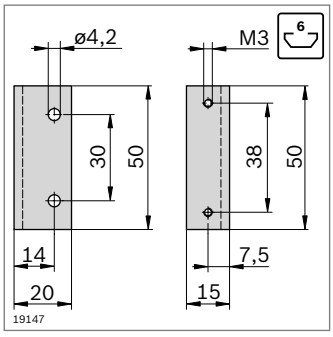

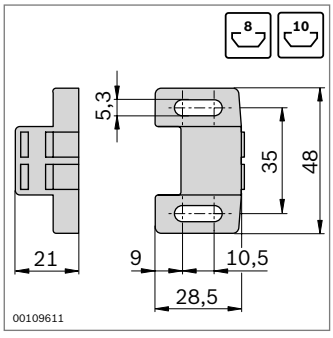

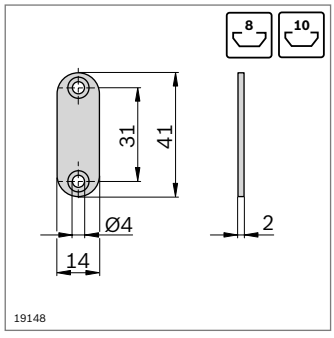

Magnet catch	Slot	No.
	8, 10	**3 842 516 165**

Material: PA; black
steel; galvanized
Scope of delivery: Incl. counterpiece

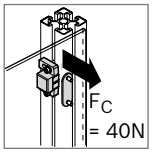

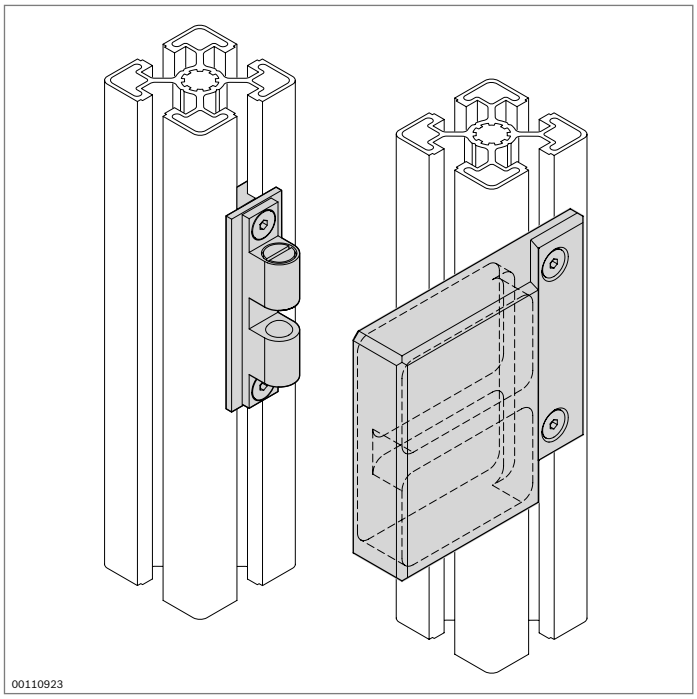

Double ball stop latch

- For arresting doors made of profile frames and for bridging door gaps
- Suitable for profiles with modular dimensions 40 mm, 45 mm, and 50 mm
- Locking also possible with varying profile spacing

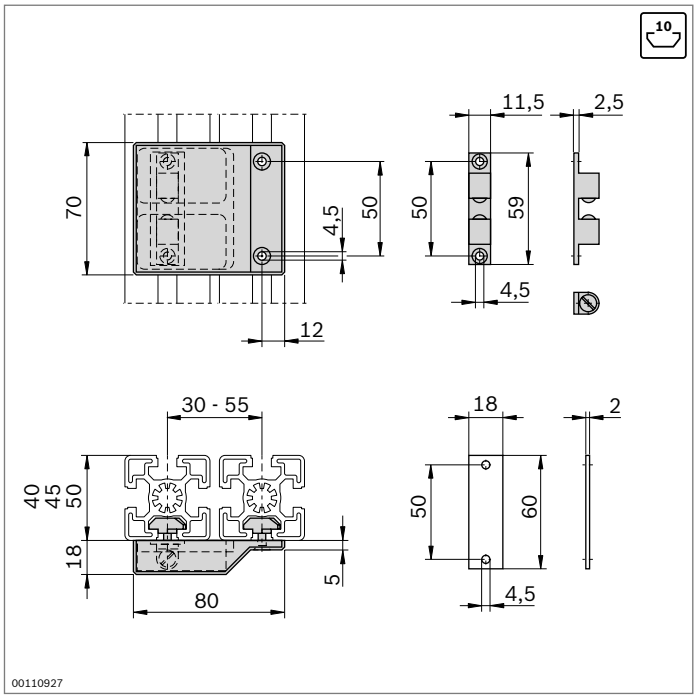

Double ball stop latch	Slot	No.	FS
	10	**3 842 530 241**	4xFS1

Material: Aaluminum, black anodized
Scope of delivery: Incl. fastening material (FS)

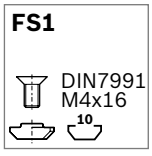

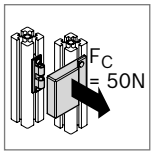

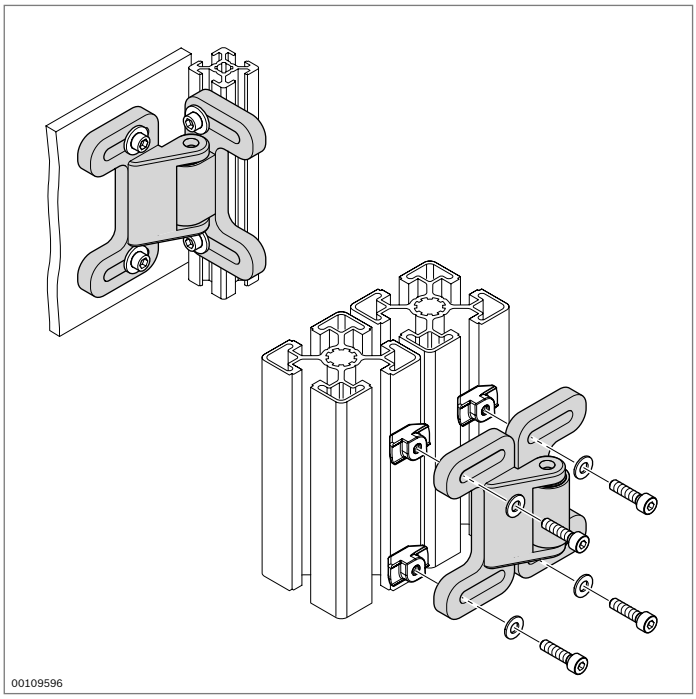

Ball catch

- Ball catch for doors and flaps
- For sliding and swing doors
- For doors with or without frames
- Elongated hole to adjust for differing spacing
- Can be used under cleanroom conditions

Accessories:
cylinder bolt ISO 4762, washer, T-nut (p. 3-4)

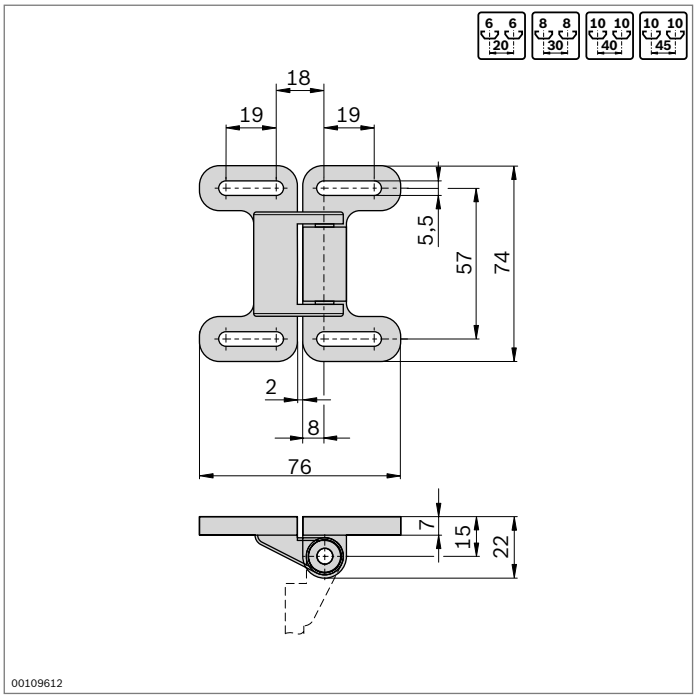

Ball catch	ESD		No.
		10	**3 842 524 986**

Material: PA, black; conductive

Fraunhofer
TESTED DEVICE
IPA
Bosch Kugelschnäpper 3842524986
Report No. BO 9903-158

Protective devices and partition walls EcoSafe

EcoSafe protective frame (p. 10-6)

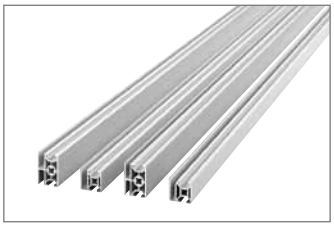

Protective grille profile (p. 10-8)

Suspension bracket, attachment kit (p. 10-10)
Tilt lever (p. 10-11)

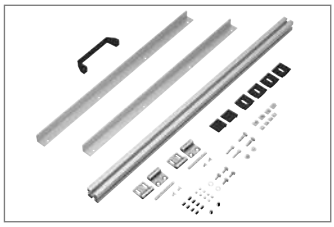

EcoSafe system door kit (p. 10-12)

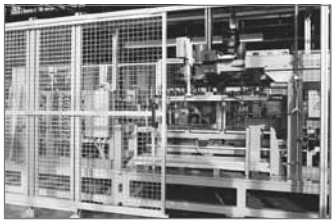

EcoSafe sliding door with/ without superstructure (p. 10-14)

EcoSafe double door kit (p. 10-16)

Lock mechanism for double door (p. 10-17)

Earthing terminal (p. 10-18)

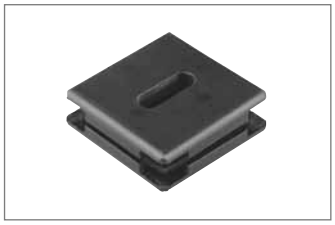

Clamping element (p. 10-19)

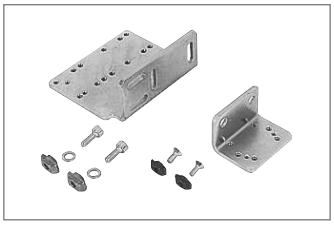

Attachment kit for safety switch (p. 10-20)

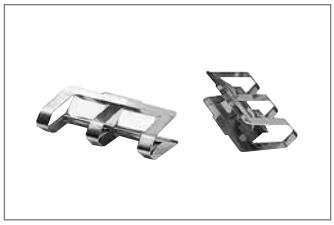

Spring clamping element (p. 10-21)

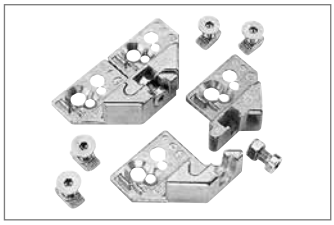

Suspension piece for frame (p. 10-22)

Eliminate safety risks in manufacturing and production by using the components for Rexroth protective devices. The EcoSafe protective fence components can be used flexibly and enable the current standards and guidelines to be complied with.
Pre-assembled protective frames, door kits, and a well thought-out overall product range ensure fast planning as well as economical and practical implementation.

Individual protective devices such as enclosures and additional attachments can be created using the tried and tested basic mechanical elements. These two systems are mutually compatible. Rexroth therefore offers a comprehensive, overall solution for all requirements.

Compliance with standards

DIN EN ISO 12100 – Safety of machinery and plant

- The safety fence must be designed so that it can only be opened with the aid of,, or by destroying, the fastenings.
- The actual design requires a risk assessment to be carried out according to DIN EN ISO 12100-1 in every case

DIN EN 953 – General design and construction requirements

- Rigidity, impact resistance, strength & durability of connection points etc.

DIN EN ISO 13857

- Safety distances to keep upper or lower limbs out of hazardous areas

Machinery Directive 2006/42/EC

Excerpt from the requirements that apply to protective devices:

- must be solidly built
- must be securely held in position
- must not cause any additional hazards
- must not be able to be easily circumvented or rendered ineffective
- fastenings must only be able to be undone or removed with the aid of tools
- once the protective devices have been removed, fastenings must be remain attached or fastened to the protective devices or the machine

Safety distances

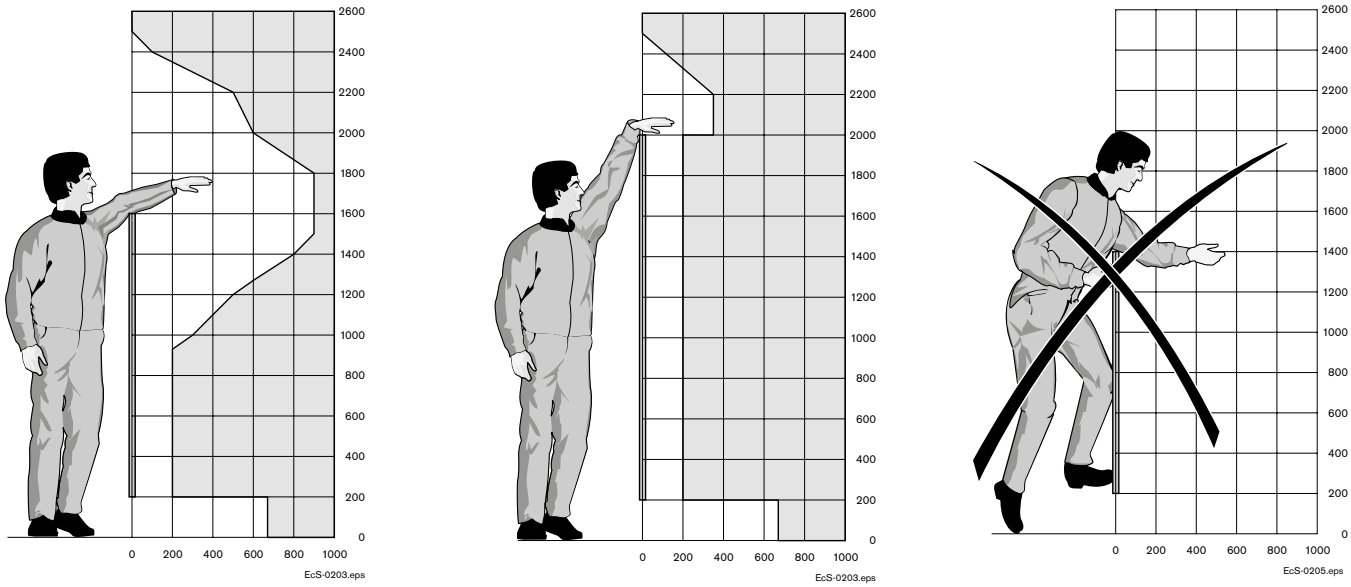

H = 1600 mm H = 2000 mm H = 1400 mm

The safety distances depend on the height of the protective device and the openings in the protective grille. If woven wire grilles with a mesh width of 40x40 are used, only a safety distance of 200 mm from the hazard area is required. The standard fence height of 2000 mm provides adequate protection in conjunction with a relatively small safety distance. The graphics show a profile with the safety distances for 2 different system heights (DIN EN 13857). Protective fences of under 1400 mm in height do not provide adequate protection for personnel.

Safety distances where there is 200 mm ground clearance

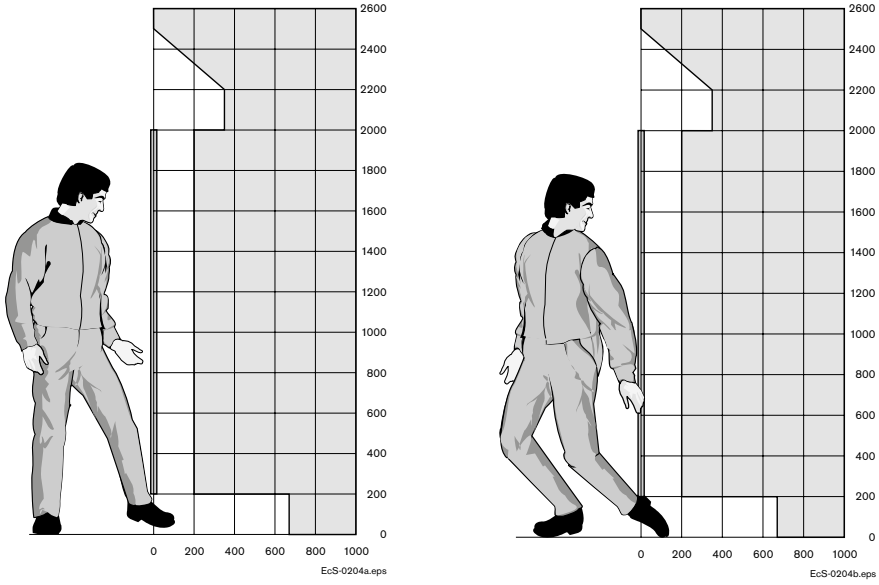

The standard distance between the protective frame and the ground is 200 mm. This gives a distance from the hazard area of 665 mm. According to the standard, openings that are larger than 180 mm allow the whole body to fit through. Depending on the customer's requirements, the distance from the ground may have to be reduced to < 180 mm.

EcoSafe components for building protective fences

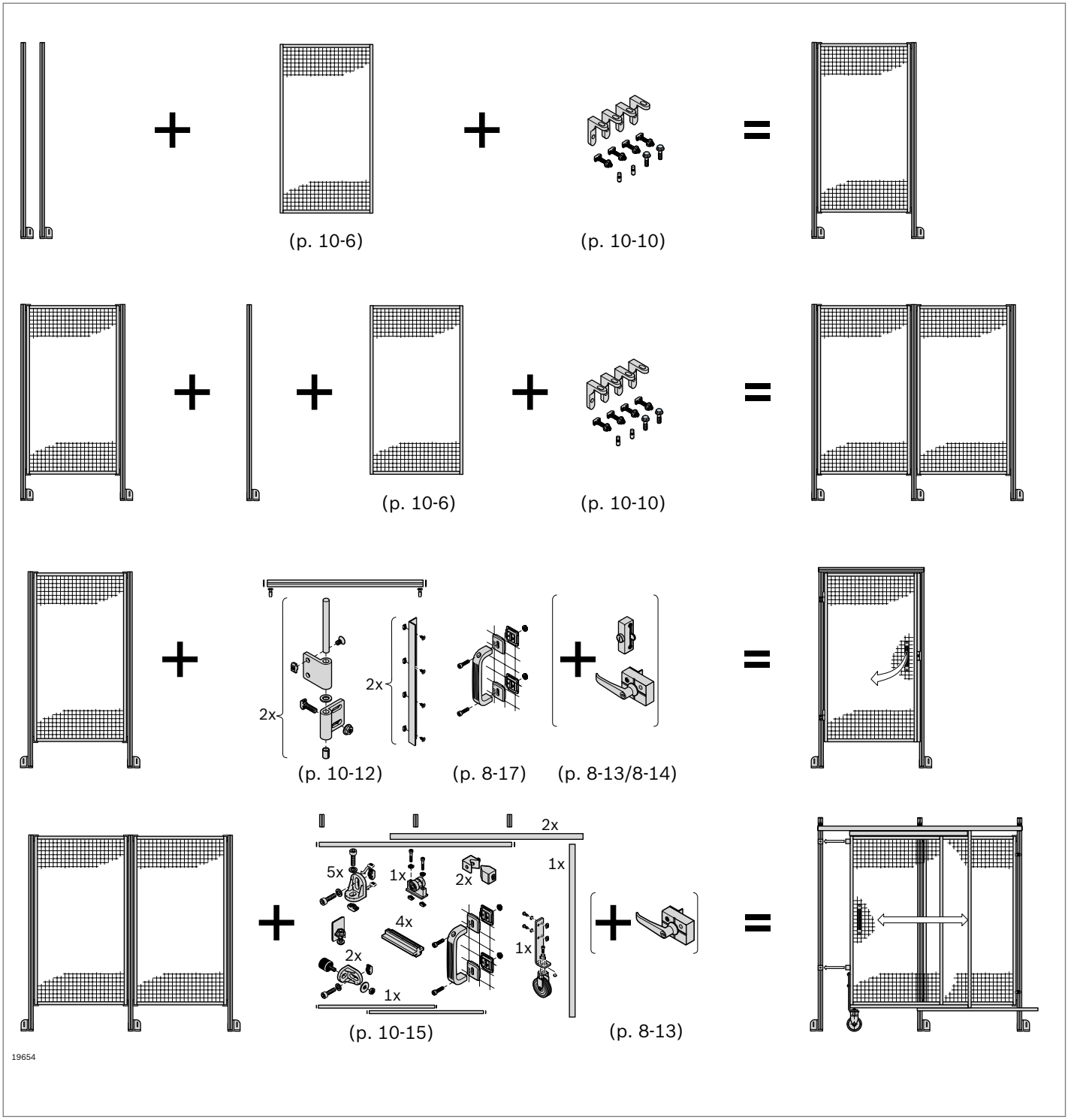

EcoSafe components for building protective fences

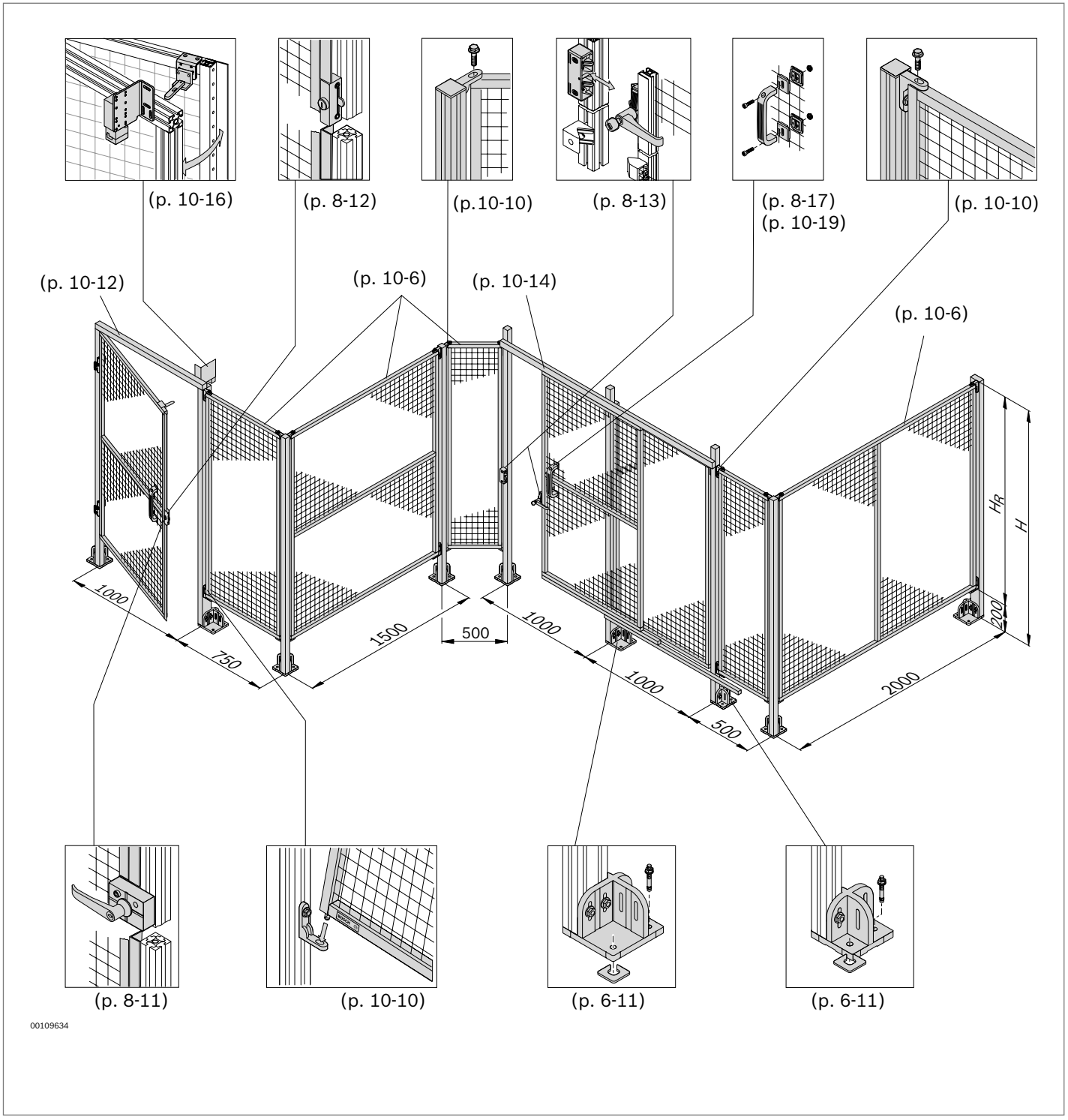

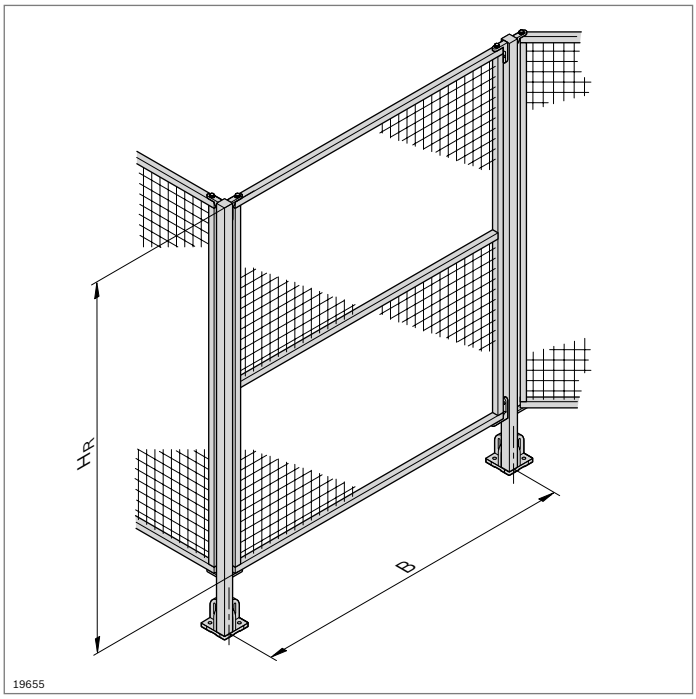

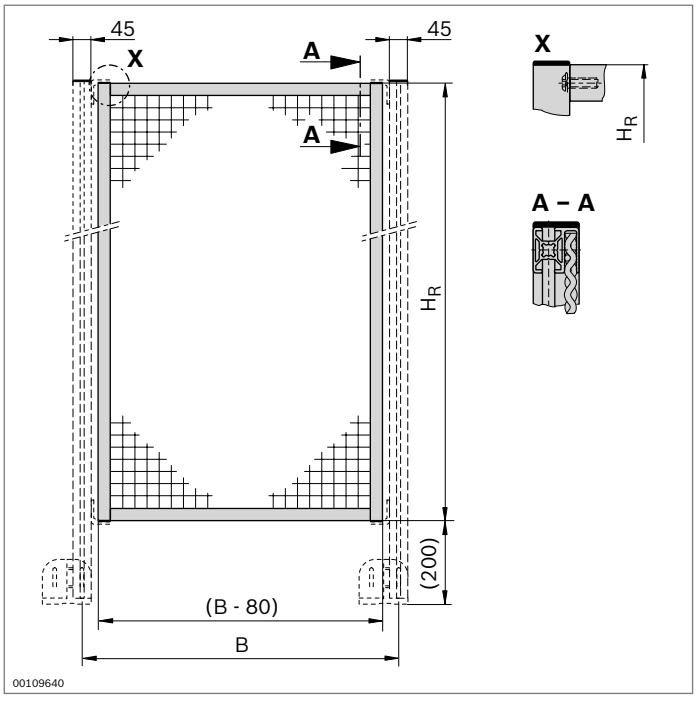

EcoSafe protective frame

- Protective frame made of protective grille profile 30x30 WG40 (p. 10-7) with woven wire grille 40x40x4
- Suitable kits enable the construction of doors (system doors, sliding doors, double doors)
- Fully assembled on delivery
- Simple mounting on the supports using the suspension brackets. Single fitter is sufficient
- Standard widths or customized dimensions
- Horizontally or vertically divided protective frames provide additional stability for large surfaces
- Color-coated woven wire grilles improve visual contrast in the protected area and facilitate recognition of access routes and emergency exit routes
- Modular dimension “B” relates to 45x45 supports

Technical data (p. 19-11)

Protective frame	**H_R** (mm)	**B** (mm)	**No.**
	1800	500	**3 842 554 282**
		750	**3 842 554 283**
		1000	**3 842 554 284**
		1500	**3 842 554 285**
	250 ... 2300	250 ... 1500	**3 842 994 742/H_R, B**
Material:	Frame: aluminum, anodized Woven wire grille: steel, hot-galvanized		

Protective frame	**H_R** (mm)	**B** (mm)	**No.**
Woven wire grille, color-coated	250 ... 2300	250 ... 1500	**3 842 994 783 / H_R, B, F**
Material:	Frame: aluminum, anodized Woven wire grille: steel, hot-galvanized, painted		
Color of woven wire grille:	F = 1: black; RAL 9005 (e.g. for fence) F = 2: yellow; RAL 1023 (e.g. for doors) Special colors on request		

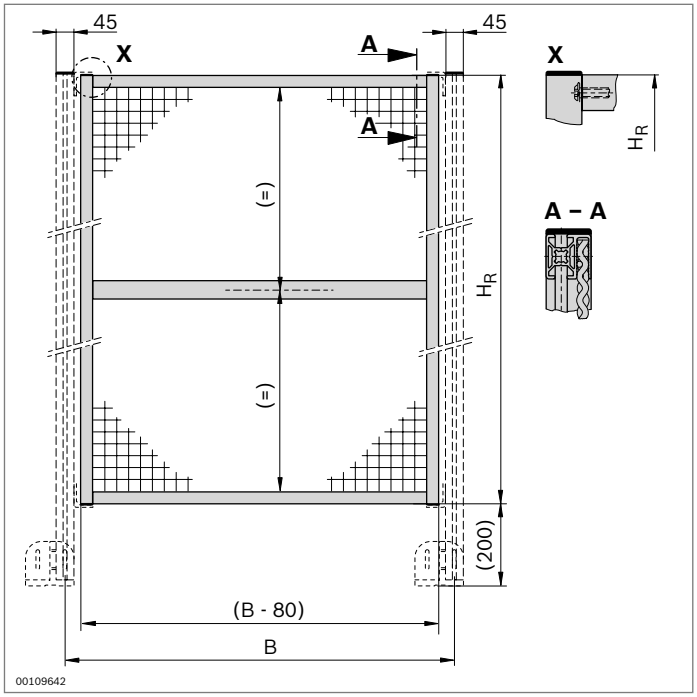

Protective frame, in horizontal sections	**H_R** (mm)	**B** (mm)	**No.**
	1800	1000	**3 842 554 281**
	500 ... 2300	250 ... 2500	**3 842 994 745/H_R, B**
Material:	Frame: aluminum, anodized Woven wire grille: steel, hot-galvanized		

Protective frame, in horizontal sections	**H_R** (mm)	**B** (mm)	**No.**
Woven wire grille, color-coated	500 ... 2300	250 ... 2500	**3 842 994 785 / H_R, B, F**
Material:	Frame: aluminum, anodized Woven wire grille: steel, hot-galvanized, painted		
Color of woven wire grille:	F = 1: black; RAL 9005 (e.g. for fence) F = 2: yellow; RAL 1023 (e.g. for doors) Special colors on request		

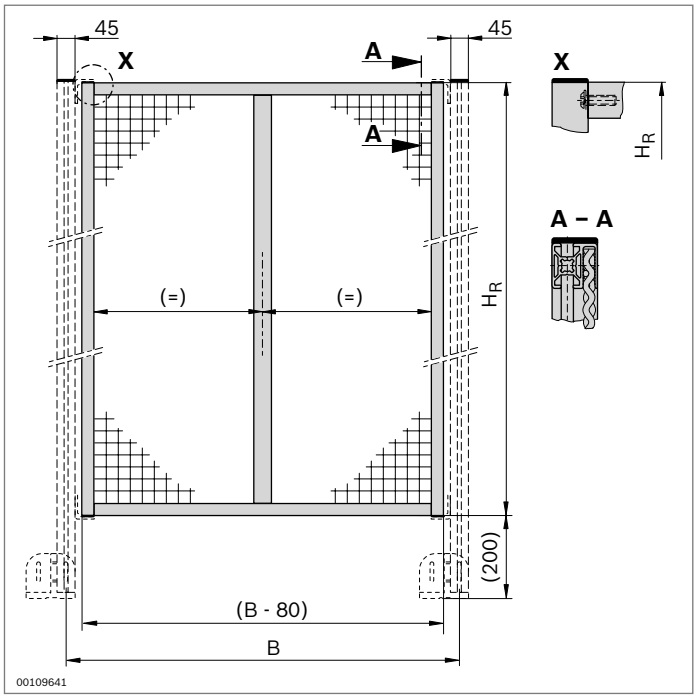

Protective fence, vertical sections	**H_R** (mm)	**B** (mm)	**No.**
	1800	2000	**3 842 554 280**
	250 ... 2300	500 ... 3000	**3 842 994 744/H_R, B**
Material:	Frame: aluminum, anodized Woven wire grille: steel, hot-galvanized		

Protective fence, vertical sections	**H_R** (mm)	**B** (mm)	**No.**
Woven wire grille, color-coated	250 ... 2300	500 ... 3000	**3 842 994 784 / H_R, B, F**
Material:	Frame: aluminum, anodized Woven wire grille: steel, hot-galvanized, painted		
Color of woven wire grille:	F = 1: black; RAL 9005 (e.g. for fence) F = 2: yellow; RAL 1023 (e.g. for doors) Special colors on request		

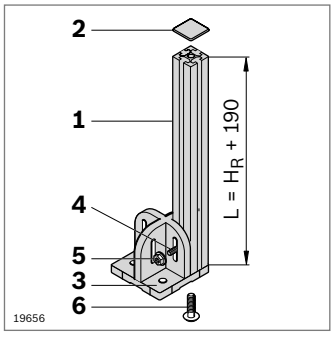

Individually construct the supports using MGE components

Component		**No.**
1	Profile 45x45L (p. 2-35)	**3 842 992 425 / L**
2	Cap (p. 2-35)	**3 842 548 753**
3	Base plate 120x120 (p. 6-11)	**3 842 527 553**
4	T-bolt M8x30 (p. 3-6)	**3 842 528 721**
5	Flange nut M8 (p. 3-6)	**3 842 345 081**
6	Central bolt S12x30-T50 (p. 3-38)	**3 842 530 236**

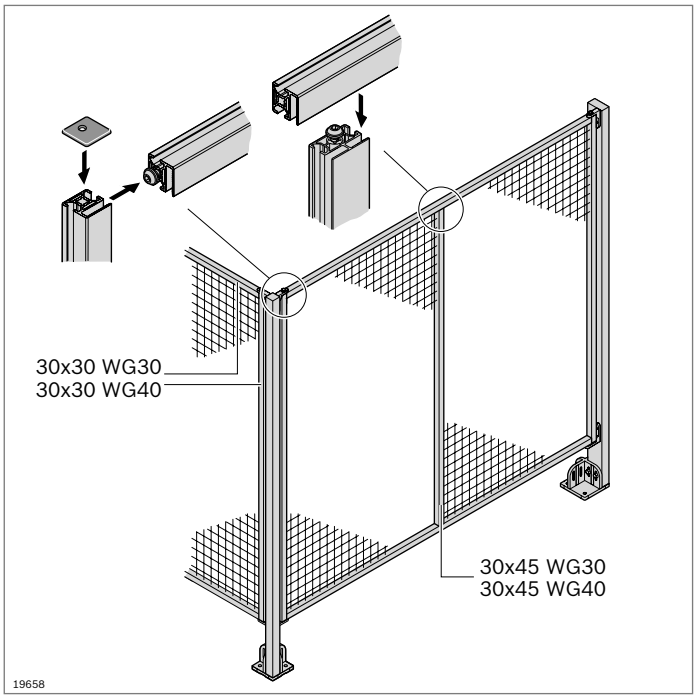

Protective grille profiles

- For the low-cost construction of protective barriers with woven wire grilles WG30 and WG40
- Fastening of woven wire grilles: directly in the special profile slot
- Fastening of surface elements: in the special profile slot using spring clamping elements (accessories)
- The profiles are connected using a central bolt (profile machining required)
- Modular dimension “B” relates to 45x45 supports

Accessories, required:

- central bolt (p. 3-38)
- woven wire grille (p. 10-6)
- Spring clamping elements (p. 10-21)

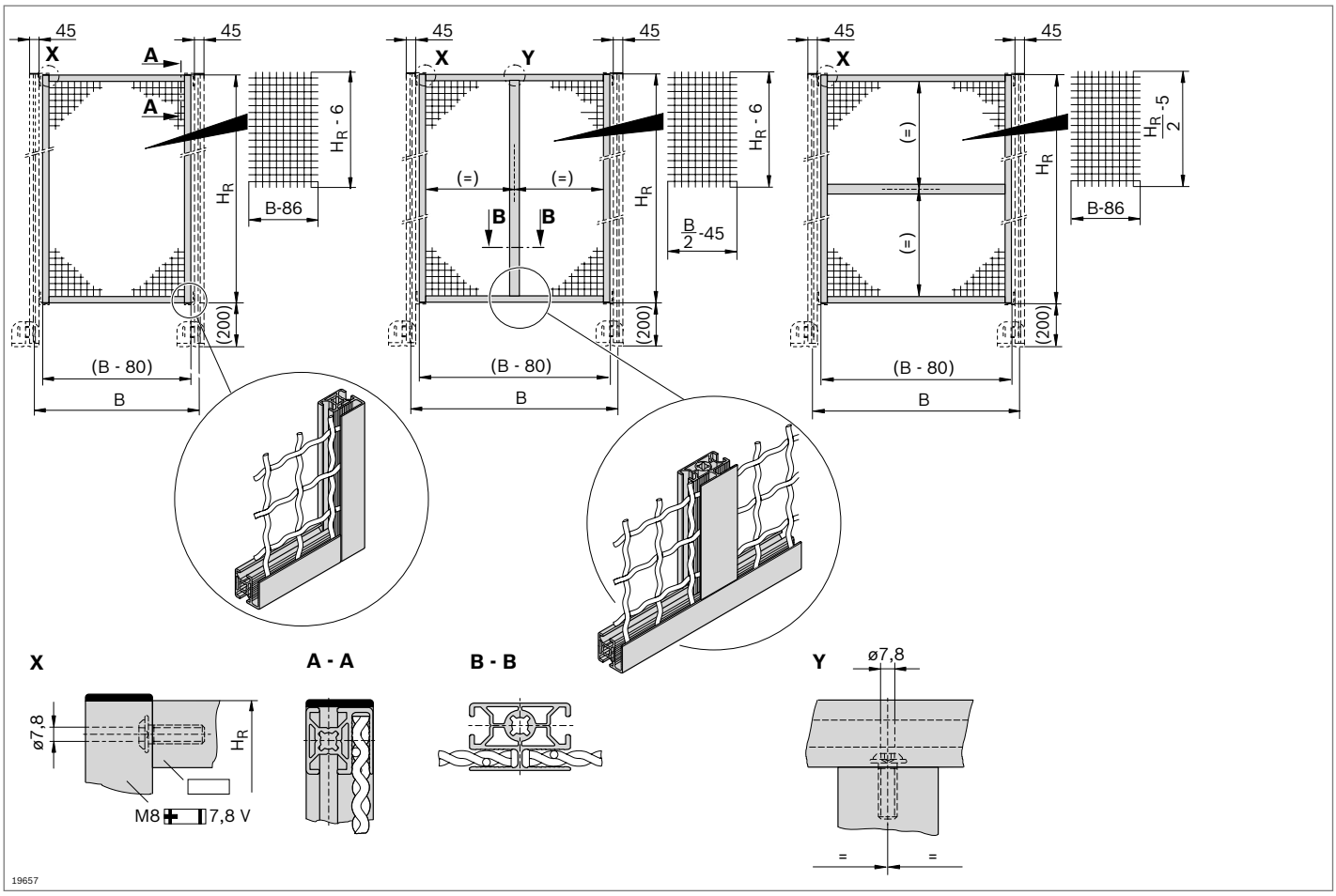

30x30 WG30

A = 3,2 cm²
I_x = 2,5 cm⁴
I_y = 3,0 cm⁴
W_x = 1,6 cm³
W_y = 1,9 cm³
m = 0,9 kg/m

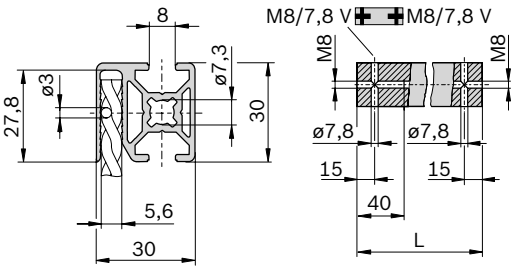

Protective grille profile 30x30 WG30		L (mm)	No.
1 pc		100 ... 5600	**3 842 992 970 / L**
1 pc	M8/7,8V M8/7,8V	100 ... 5600	**3 842 992 977 / L**
20 pcs		5600	**3 842 522 462**

Material: aluminum, anodized

30x30 WG40

A = 3,2 cm²
I_x = 2,4 cm⁴
I_y = 2,9 cm⁴
W_x = 1,5 cm³
W_y = 1,8 cm³
m = 0,9 kg/m

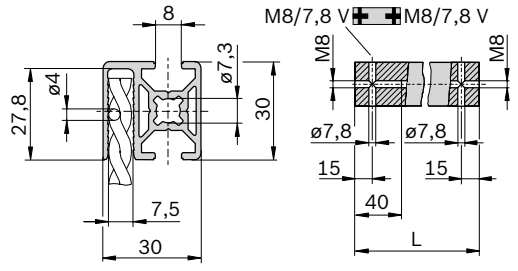

Protective grille profile 30x30 WG40		L (mm)	No.
1 pc		100 ... 5600	**3 842 992 972 / L**
1 pc	M8/7,8V M8/7,8V	100 ... 5600	**3 842 992 978 / L**
20 pcs		5600	**3 842 522 464**

Material: aluminum, anodized

30x45 WG30

A = 4,5 cm²
I_x = 7,3 cm⁴
I_y = 4,2 cm⁴
W_x = 3,2 cm³
W_y = 2,7 cm³
m = 1,2 kg/m

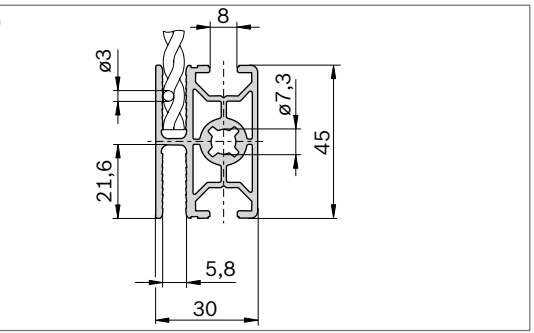

Protective grille profile 30x45 WG30		L (mm)	No.
1 pc		100 ... 5600	**3 842 992 971 / L**
20 pcs		5600	**3 842 522 463**

Material: aluminum, anodized

30x45 WG40

A = 4,5 cm²
I_x = 6,9 cm⁴
I_y = 4,1 cm⁴
W_x = 4,3 cm³
W_y = 1,8 cm³
m = 1,2 kg/m

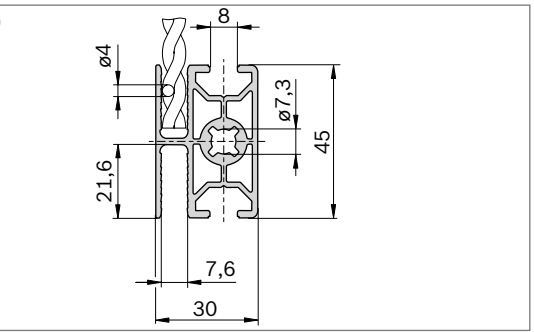

Protective grille profile 30x45 WG40		L (mm)	No.
1 pc		100 ... 5600	**3 842 992 973 / L**
20 pcs		5600	**3 842 522 465**

Material: aluminum, anodized

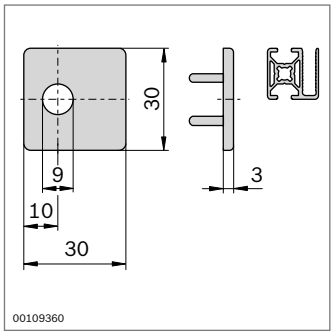

- Cap for a more attractive appearance and to prevent injuries

Cap 30x30		No.
	100	**3 842 522 345**

Material: PA; black

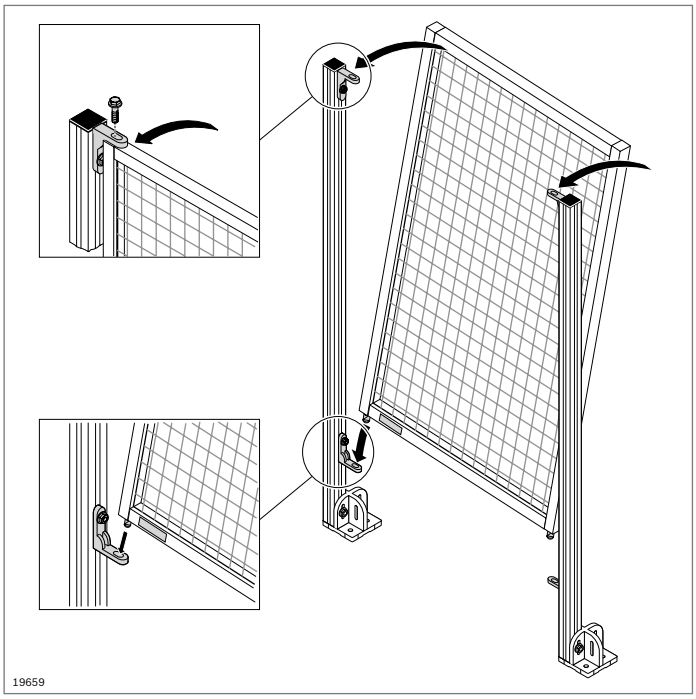

Suspension bracket
Safety Strip safety kit

Suspension bracket

- For mounting the EcoSafe protective frameon the support at various angles
- Suspension bracket with centering lugs as anti-torsion element

Safety Strip safety kit

- Safe and inexpensive
- Easy assembly; can be retrofitted
- Patented
- Meets the requirements of Machinery Directive 2006/42/EC Screw remains connected to the suspension bracket after loosening

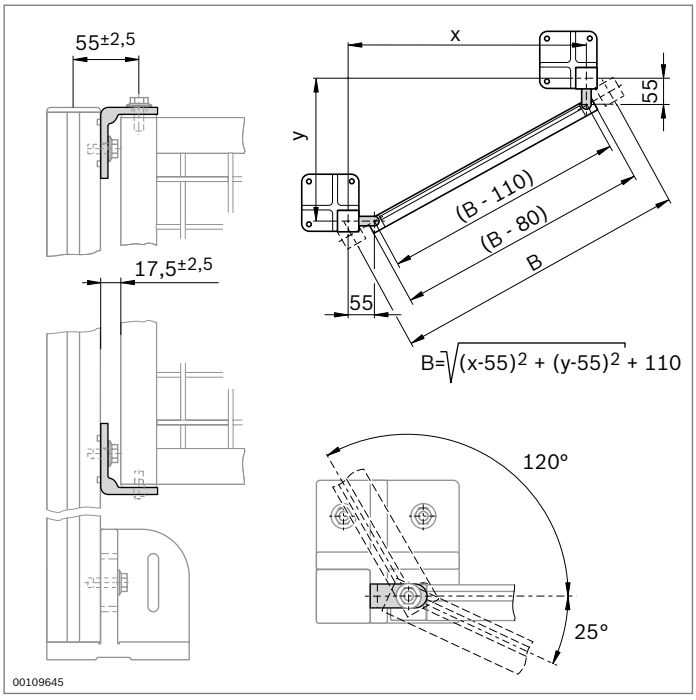

Suspension bracket	No.	FS
Set	**3 842 522 481**	4xFS1, 2xFS2, 2xFS3

Material: diecast zinc
Fastening material: steel; galvanized
Scope of delivery: In a set with four brackets, incl. fastening material (FS)

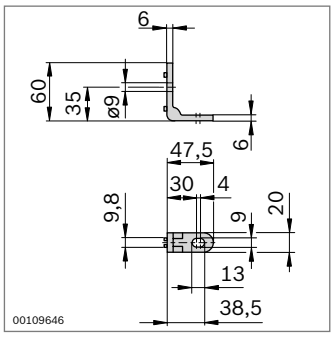

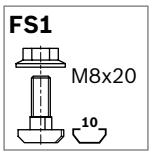

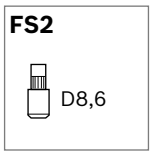

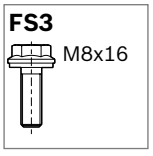

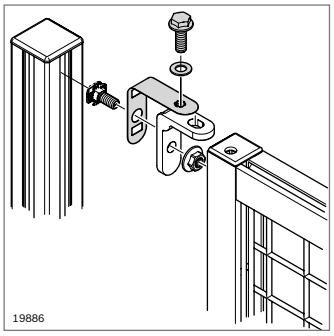

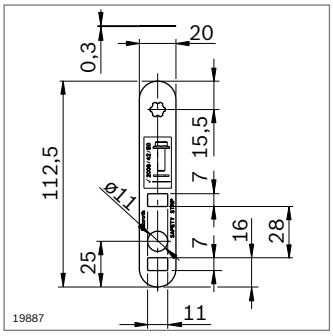

Safety Strip safety kit		No.	FS
	10	**3 842 542 146**	FS1

Material: PP granulate
Scope of delivery: Incl. fastening material (FS)

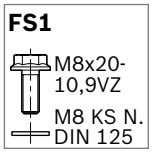

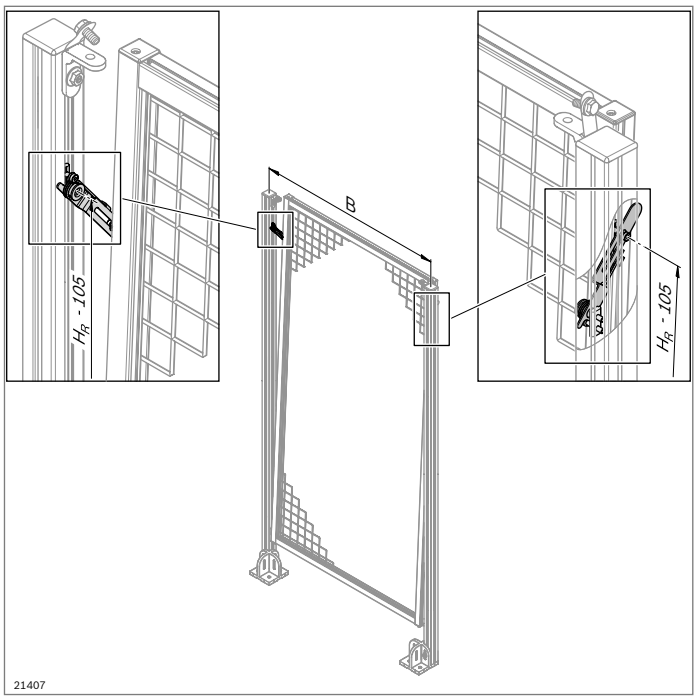

Tilt lever

- For compliance with the requirement in Machinery Directive 2006/42/EC relating to the detaching of protective frames
  - The long-arm spring is designed so that it tilts the protective frame outwards, making it clear that the protective frame is detached
  - The protective frame cannot fall out
- Easily removable EcoSafe protective frames
- Can be retrofitted
- Installation on both sides recommended for EcoSafe protective frames of width B > 1500 mm

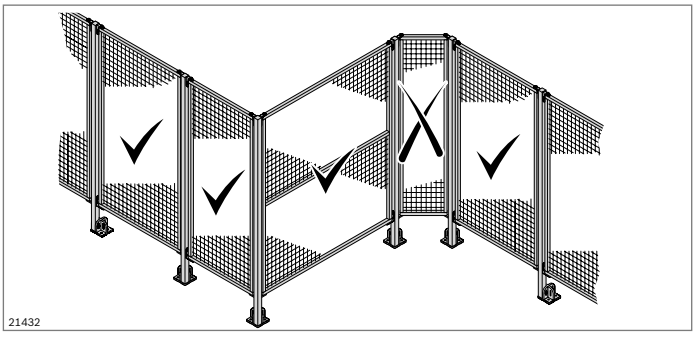

Possible installation situation:

- not suitable for installing the protective frame across a corner

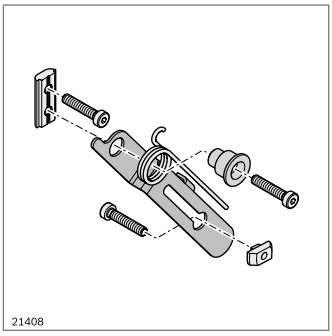

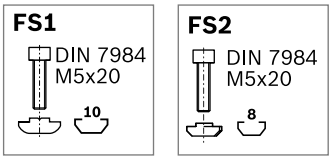

Tilt lever		No.	FS
		3 842 546 560	**FS1, FS2**
Material:	Fixing plate: stainless steel Spacer: aluminum Long-arm spring: spring steel		
Scope of delivery:	Holding plate, spacer, long-arm spring, fastening material (FS)		

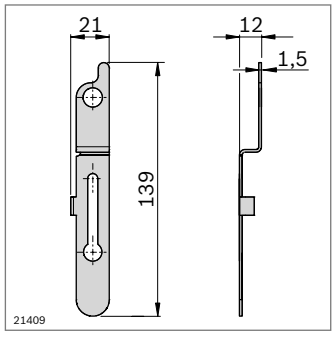

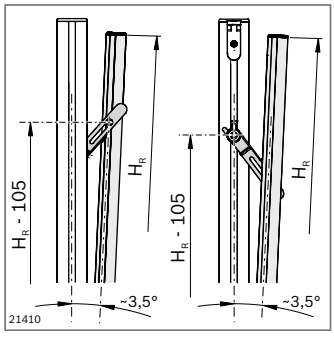

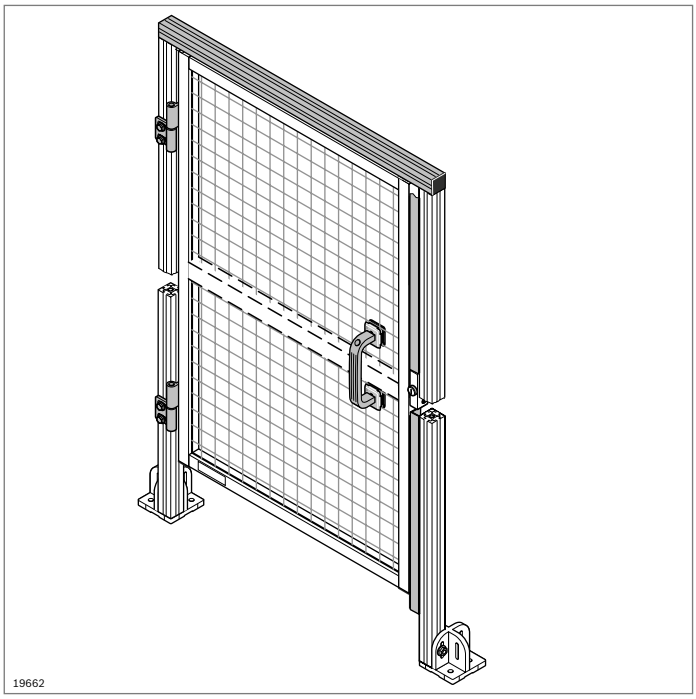

EcoSafe system door kit

- For constructing an EcoSafe system door in the modular dimension system
- Use of finished protective frame as a door
- For doors that open to the left or right
- Required components:
  - assembly kit for system door
  - protective frame (p. 10-6)

Accessories, optional:

- door lock (p. 8-12)
- attachment kit for safety switch (p. 10-20)

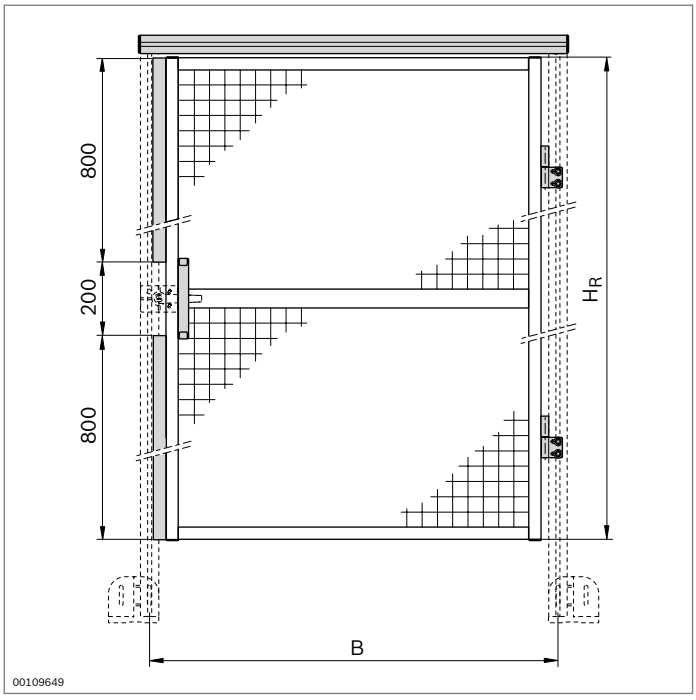

Assembly kit for system door	H_R (mm)	B (mm)	No.
	1800	1000	**3 842 523 166**
	1800	750	**3 842 523 165**

Scope of delivery: 2 x hinge, 2 x stop rail, profile as door lintel, bow-shaped handle, incl. fastening material

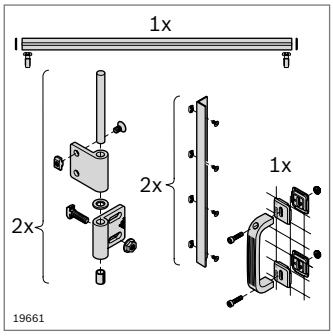

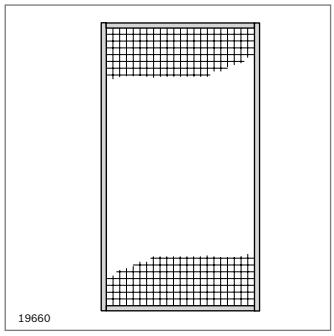

Selection of suitable protective frames

Protective frame	H_R (mm)	B (mm)	No.
Protective frame, in horizontal sections	1800	1000	**3 842 554 281**
Protective frame	1800	750	**3 842 554 283**

Material: Aluminum, anodized; woven wire grille and fastening material: steel; galvanized

Scope of delivery: Fully assembled

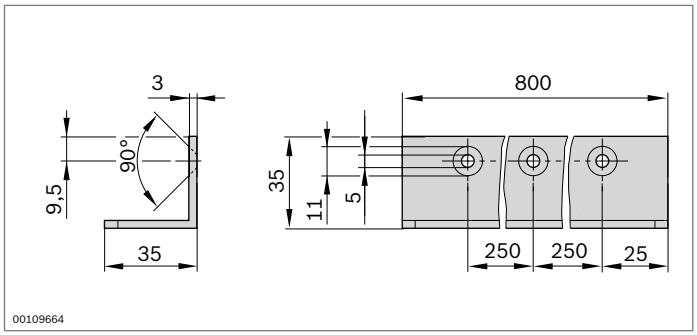

▶ System door stop rail for self-assembly

Stop rail	No.
	3 842 523 170

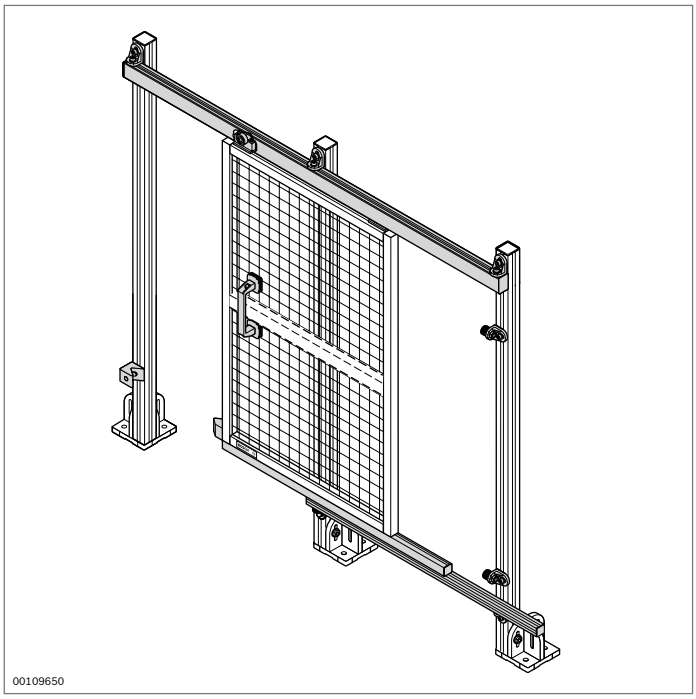

EcoSafe assembly kit for sliding door with superstructure

- Assembly kit for constructing an EcoSafe sliding door with superstructure in the modular dimension system
- Use of finished protective frame as a door
- Easy subsequent installation in a protective fence
- Rollers with ball bearings for smooth running
- For doors that open to the left or right
- Required components:
  - assembly kit for sliding door with superstructure
  - protective frame (p. 10-6)

Accessories, optional:
door lock (p. 8-12)

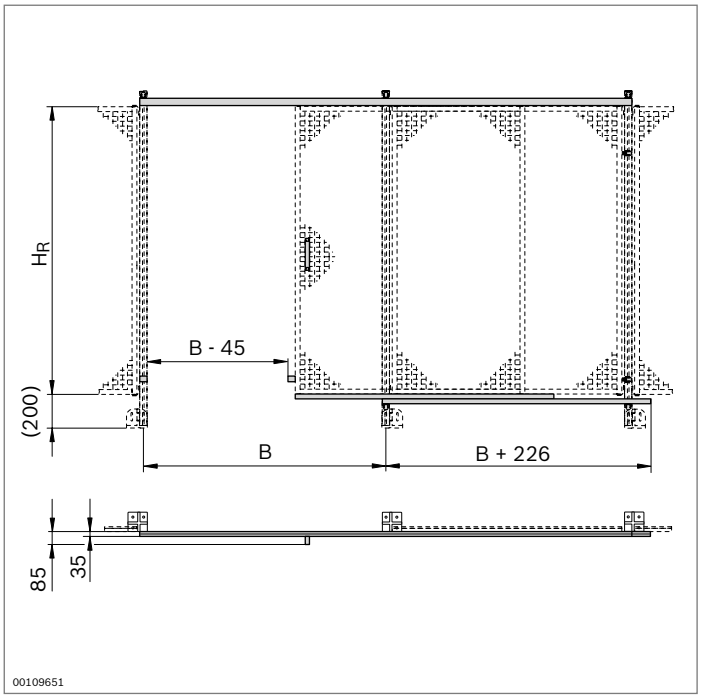

Assembly kit for sliding door with superstructure	H_R (mm)	B (mm)	No.
	1800	1000	**3 842 524 163**
	1800	1500	**3 842 524 164**

Scope of delivery: 2 x bump stop, 2 x slider, 2 x trolley, profile for door superstructure, 7 x mounting bracket, stop kit, 2 x profile for sliding door

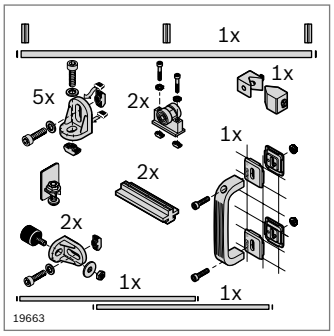

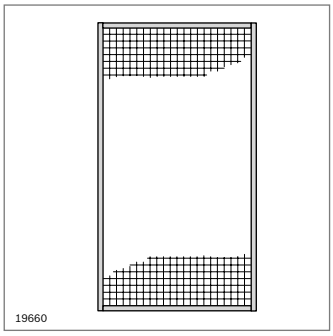

Selection of suitable protective frames

Protective frame	H_R (mm)	B (mm)	No.
	1800	1000	**3 842 554 284**
	1800	1500	**3 842 554 285**

Material: Aluminum, anodized; woven wire grille and fastening material: steel; galvanized

Scope of delivery: Fully assembled

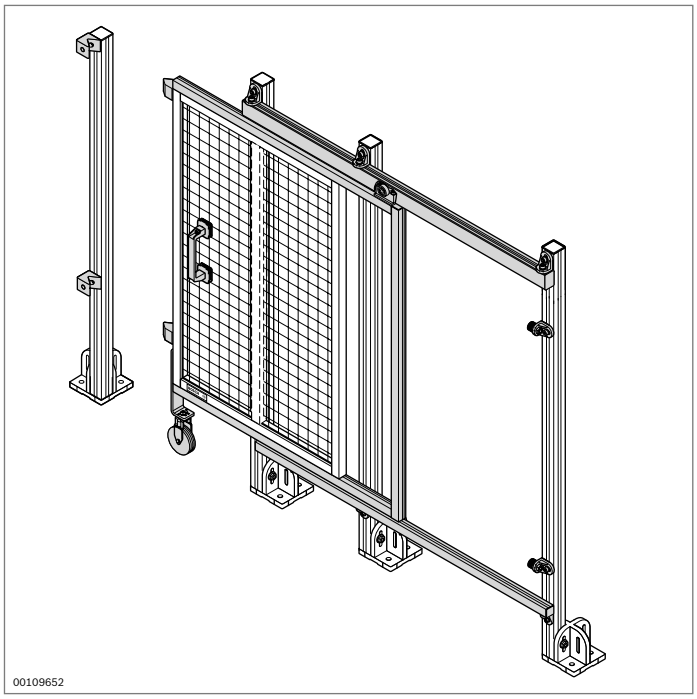

EcoSafe sliding door without superstructure

- Assembly kit for constructing an EcoSafe sliding door without superstructure in the modular dimension system
- Use of finished protective frame as a door
- Easy subsequent installation in a protective fence
- Rollers with ball bearings for smooth running
- For doors that open to the left or right
- Required components:
  - assembly kit for sliding door without superstructure
  - protective frame (p. 10-6)

Accessories, optional:
door lock (p. 8-12)

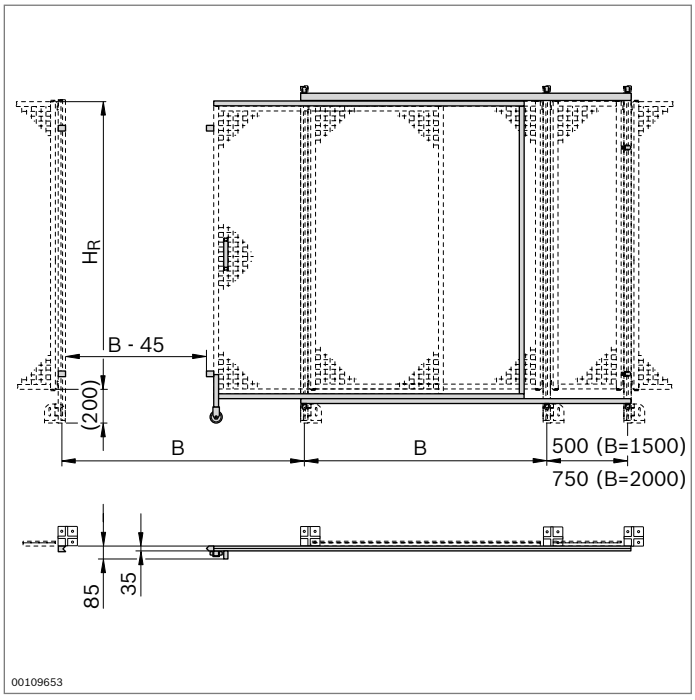

Assembly kit for sliding door without superstructure	H_R (mm)	B (mm)	No.
	1800	1500	**3 842 524 165**
	1800	2000	**3 842 524 166**

Scope of delivery: 2 x bumper, 3 x slider, trolley, profile for door superstructure, 8 x mounting bracket, 2 x stop kit, 2 x profile for sliding door, incl. fastening material

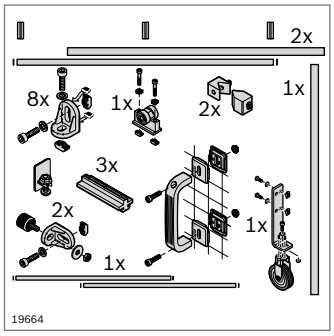

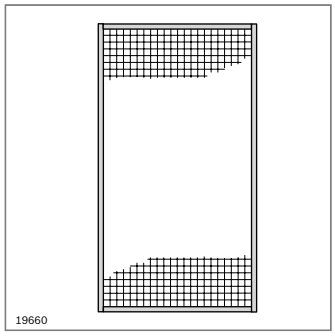

Selection of suitable protective frames

Protective frame	H_R (mm)	B (mm)	No.
Protective frame	1800	1500	**3 842 554 285**
Protective fence, vertical sections	1800	2000	**3 842 554 280**

Material: Aluminum, anodized; woven wire grille and fastening material: steel; galvanized

Scope of delivery: Fully assembled

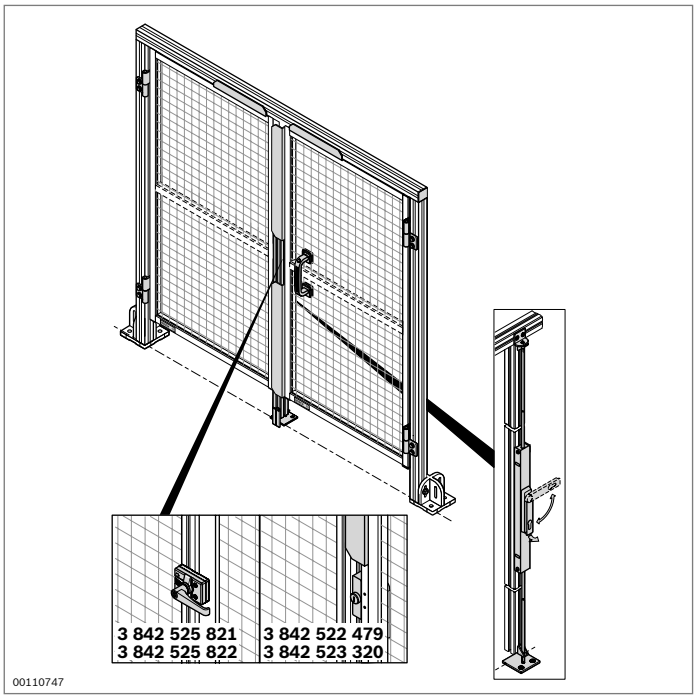

EcoSafe double door kit

- Assembly kit for constructing an EcoSafe double door in the modular dimension system
- Use of finished protective frame as a door
- Easy subsequent installation in a protective fence
- Optional installation of a standard lock cylinder in the lock mechanism for the double door
- Required components:
  - double door assembly kit
  - two protective frames (p. 10-6)

Accessories, optional:
- door lock (p. 8-12)
- attachment kit for safety switch (p. 10-20)
- standard lock cylinder (dimensions, p. 8-14)

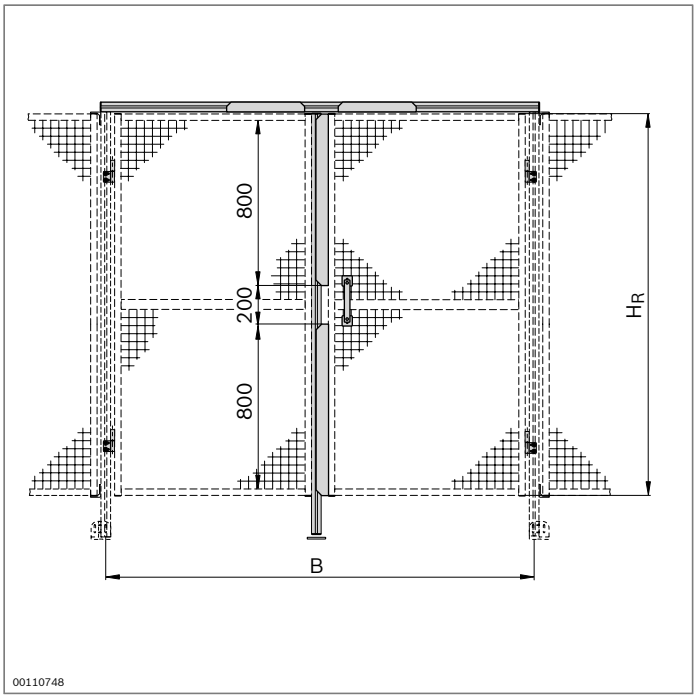

double door assembly kit	H_R (mm)	B (mm)	No.
	1800	1500	**3 842 525 781**
	1800	2000	**3 842 525 782**

Scope of delivery: Lock mechanism for double door, profile for door superstructure, profile for door stop, 4 x hinge, base plate, bow-shaped handle, 2 x stop bracket for door bolts, 2 x stop bracket for door stop, fastening material

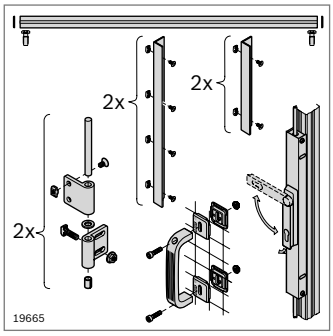

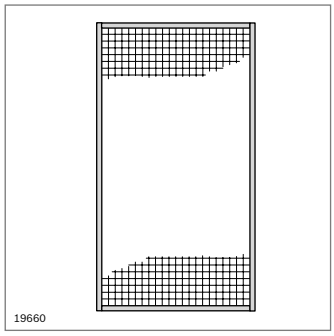

Selection of suitable protective frames

Protective frame	H_R (mm)	B (mm)	No.
Protective frame	1800	750	**3 842 554 283**
Protective frame, in horizontal sections	1800	1000	**3 842 554 281**

Material: Aluminum, anodized; woven wire grille and fastening material: steel; galvanized

Condition on delivery: Fully assembled

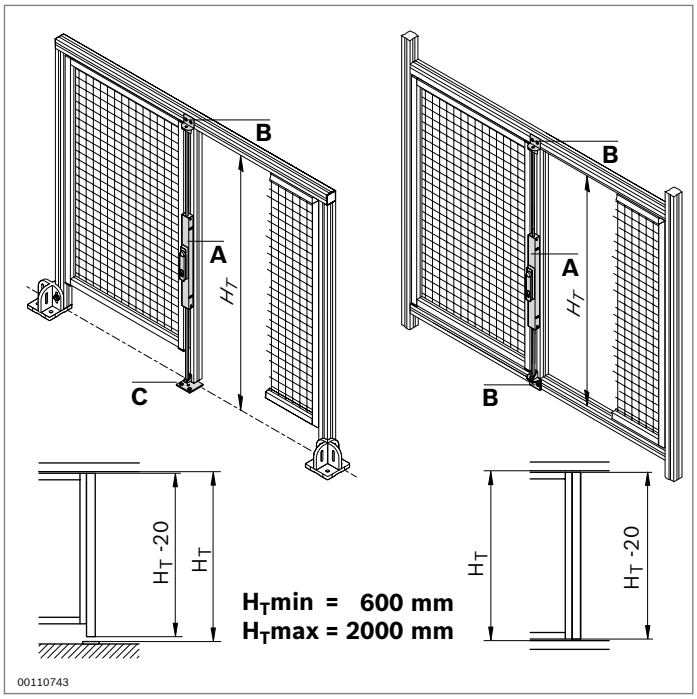

Lock mechanism for double door

- Components for constructing a lock mechanism for double doors
- Optional installation of a standard lock cylinder in the lock mechanism for the double door
- Locking mechanism assembly kit (**A**) for individually designed double doors with $H_T$max = 2000 mm
- Lock bracket (**B**) for mounting the lock bolt bar
- Base plate (**C**) for mounting the lock bolt bar; fastened to the floor with supplied dowels. For doors which can be driven through

Accessories, optional:
standard lock cylinder (dimensions, p. 8-14)

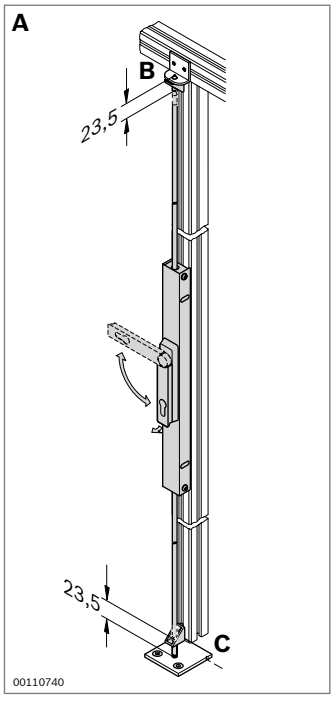

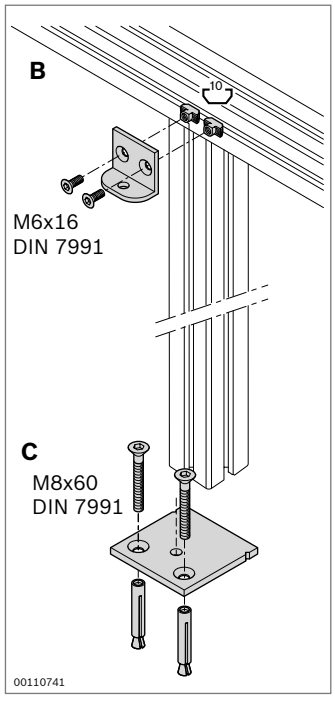

Lock mechanism assembly kit	No.	FS
A	**3 842 525 780**	2xFS1, 2xFS2, 4xFS3

Material:	Housing: aluminum Door handle: PA; black Lock bolt: steel; galvanized Lock bolt guide bracket: diecast zinc
Scope of delivery:	Lock mechanism for double door, incl. fastening material (FS)

Lock bracket	No.	FS
B	**3 842 526 786**	2xFS4

Material:	Aluminum, anodized
Scope of delivery:	Incl. fastening material (FS)

Base plate	No.	FS
C	**3 842 526 787**	2xFS5

Material:	Floor plate: steel; stainless Floor dowels: steel; galvanized
Scope of delivery:	Incl. fastening material (FS)

FS1

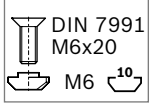

FS2

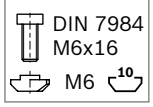

FS3

FS4

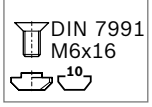

FS5

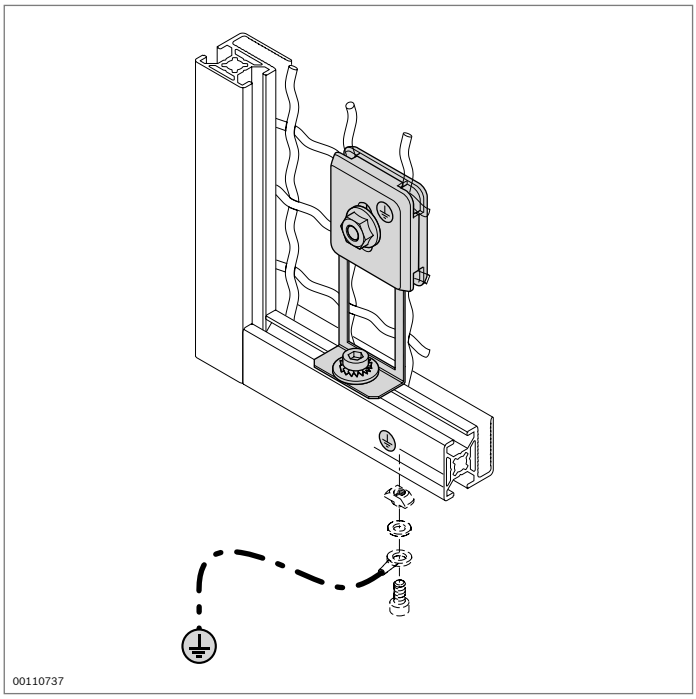

Earthing terminal

- For creating an electrically conductive connection between the woven wire grille and protective frame
- Connect the protective conductor via the ESD-conductive connection elements (e.g. T-nut)
- Guarantees safe conduction of short-circuit currents up to a rated current of 63 A

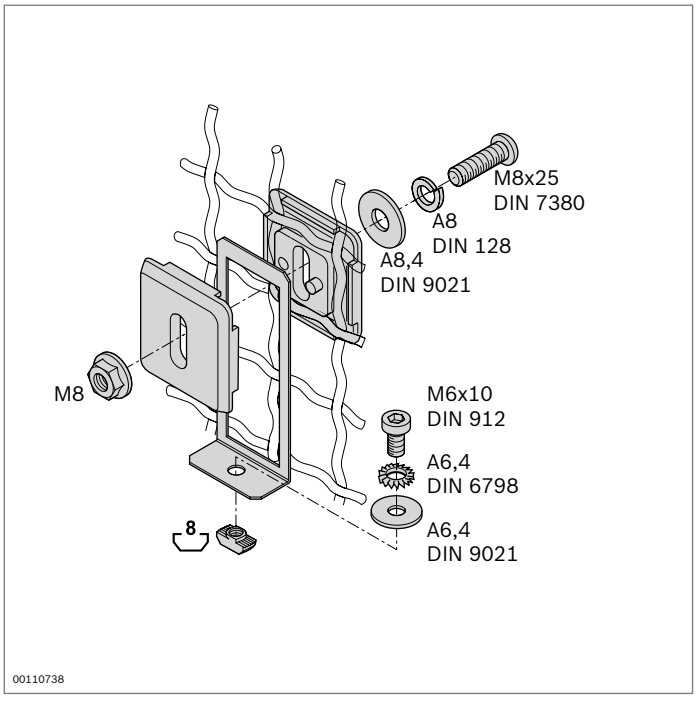

Earthing terminal		No.	FS
		3 842 525 833	FS1, FS2
Material:	Earthing terminal: steel; stainless Clamping element: PA; black Fastening material: steel; galvanized		
Scope of delivery:	Incl. fastening material (FS)		

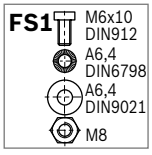

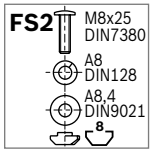

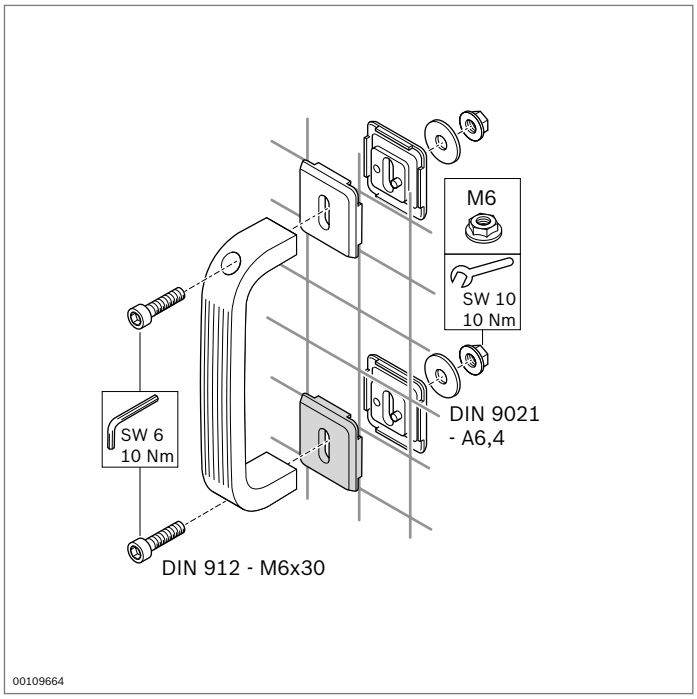

Clamping element

- For attaching handles, information boards or warning signs to woven wire grilles 40x40x4 and 30x30x3
- Clamping with opposing pairs of clamping elements

Accessories, required:
fastening material; see drawing

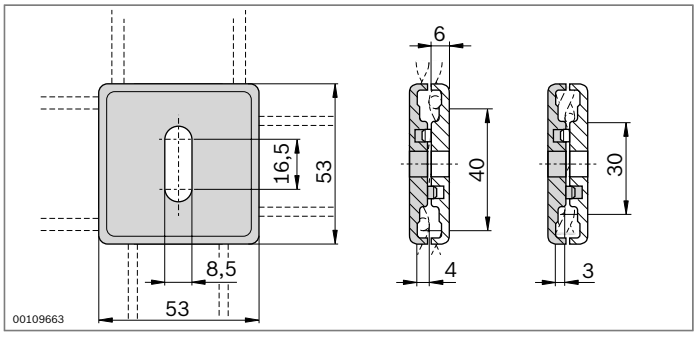

Clamping element		No.
	20	**3 842 523 308**

Material: PA66; black

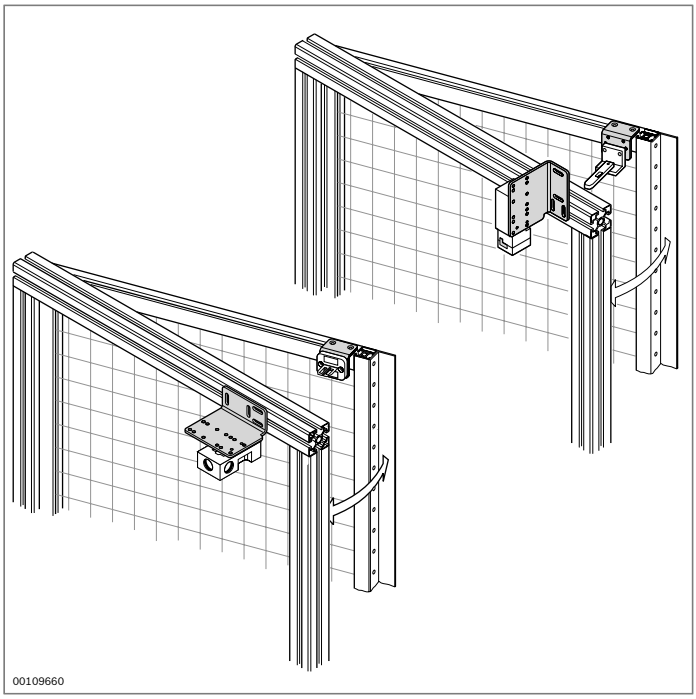

Attachment kit for safety switch

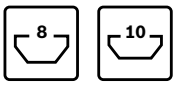

- For installing standard commercially available safety switches on EcoSafe system doors

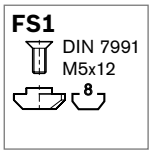

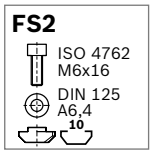

Attachment kit for safety switch		No.	FS
For safety switch	**For activator**		
Euchner NZ 1 VZ...	024298; 024299	**3 842 522 475**	2xFS1, 2xFS2
Euchner NZ 2 VZ...	024298; 024299		
Euchner NZ 1 VS...	024298; 024299		
Euchner NZ 2 VS...	024298; 024299		
Schmersal AZ15,...	AZ15/16-B2-1747		
Schmersal AZ16...	AZ15/16-B2-1747		
Schneider Electric XCS - A...	XCS-Z03		
Schneider Electric XCS - C...	XCS-Z03		
Schneider Electric XCS - PA...	XCS-Z13		
Schneider Electric XCS - TE...	XCS-Z13		
Euchner TZ...	024298; 024299	**3 842 522 476**	2xFS1, 2xFS2
Schneider Electric XCS - LE/ LF...	XCS-Z03		
Schneider Electric XCS - TE...	XCS-Z13		
Schneider Electric XCS - PA...	XCS-Z13		
Schmersal AZM161...	AZM161-B1		
Schmersal AZM161...	AZM161-B1E	**3 842 522 477**	2xFS1, 2xFS2

Material: Steel; galvanized
Scope of delivery: Incl. adapter plate, bracket, incl. fastening material (FS)

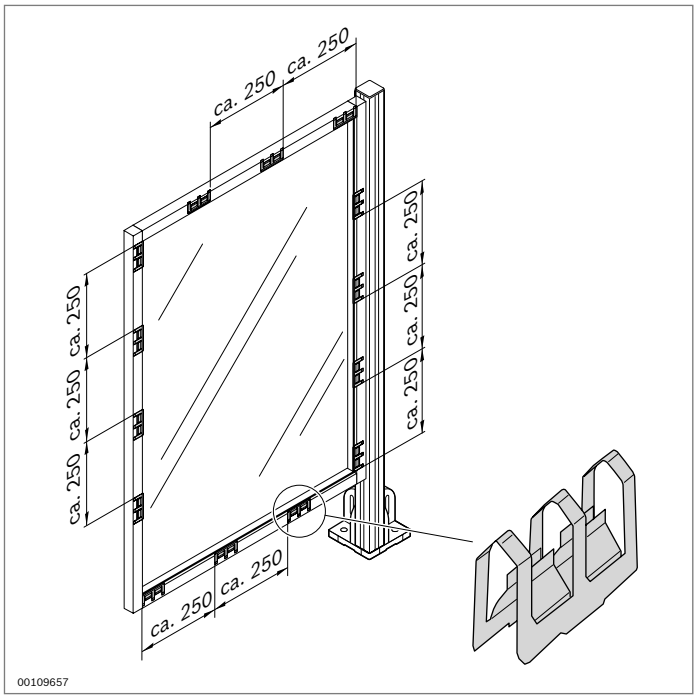

Spring clamping element

- For clamping surface elements in EcoSafe protective fence profiles 30x30 WG30 and 30x30 WG40
- Play-free clamping
- Individual sections of the protective frames can be filled as you wish

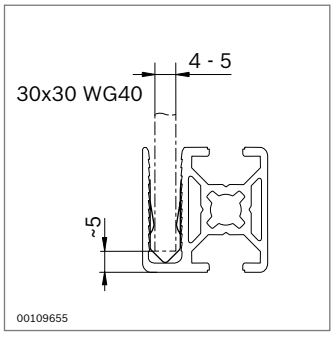

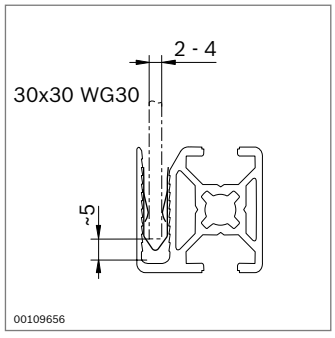

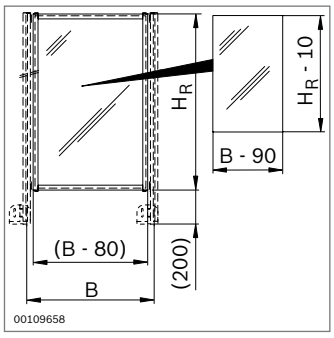

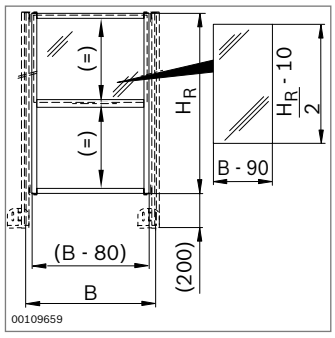

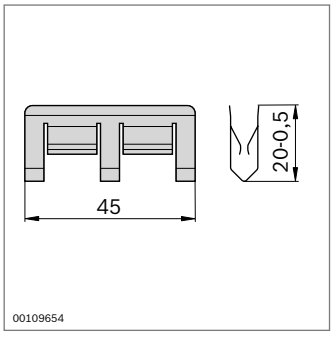

Spring clamping element		No.
	100	**3 842 525 014**

Material: Spring steel, stainless

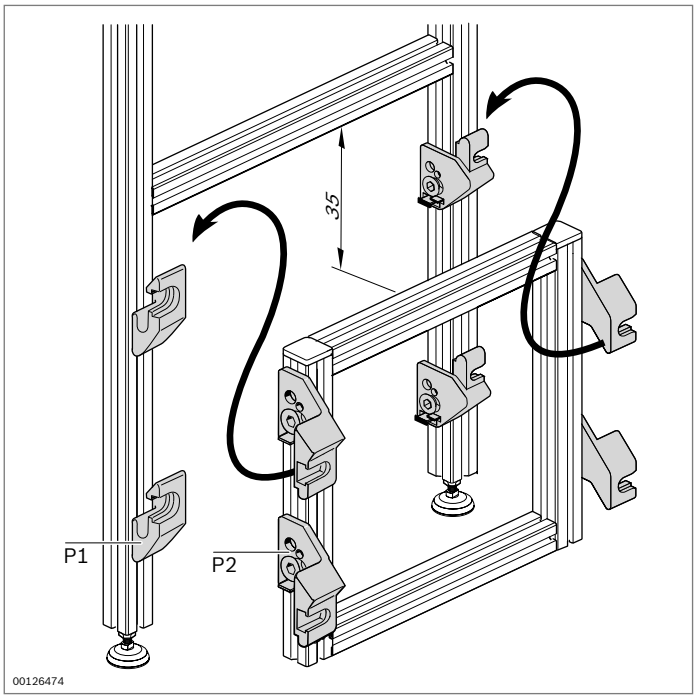

Suspension piece for frames

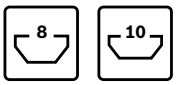

- Very quick fitting and removal of pre-assembled frames in prepared supporting structures
- Protection against unintentional lifting out due to both parts of the suspension piece being screwed in
- Notes on compliance with the Machinery Directive 2006/42/EC: Please note that fastening parts may work loose during disassembly

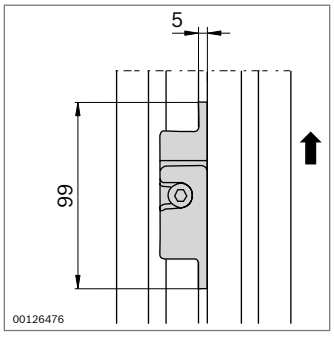

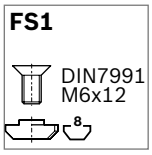

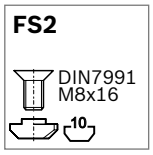

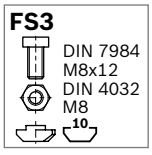

Suspension piece	P1	P2	No.	FS
Set	45	30	**3 842 515 531**	4xFS1, 4xFS2, 4xFS3
Set	45	45	**3 842 515 863**	8xFS2, 4xFS3

Material: diecast zinc

Scope of delivery: Four suspension pieces, incl. fastening material (FS)

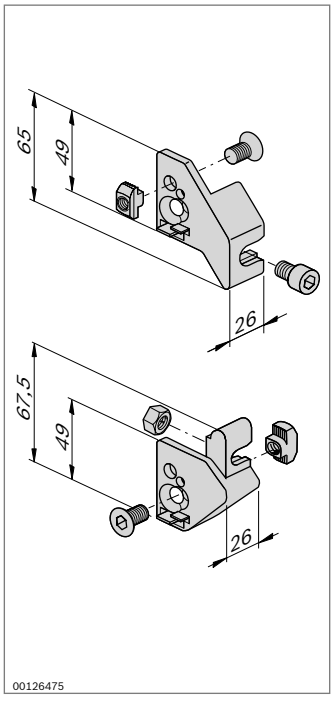

Installation elements

Cable duct PA (p. 11-2)

Cable duct AL (p. 11-3)

Cable bracket (p. 11-9)

Quick-lock (p. 11-10)

Electrical leads must be neatly laid, because only if they have been installed in an orderly way can electrical faults be easily located and eliminated.

Cable ducts and cable brackets are therefore important elements in terms of maintenance-friendly electrical installation on all kinds of constructions made of basic mechanical elements.

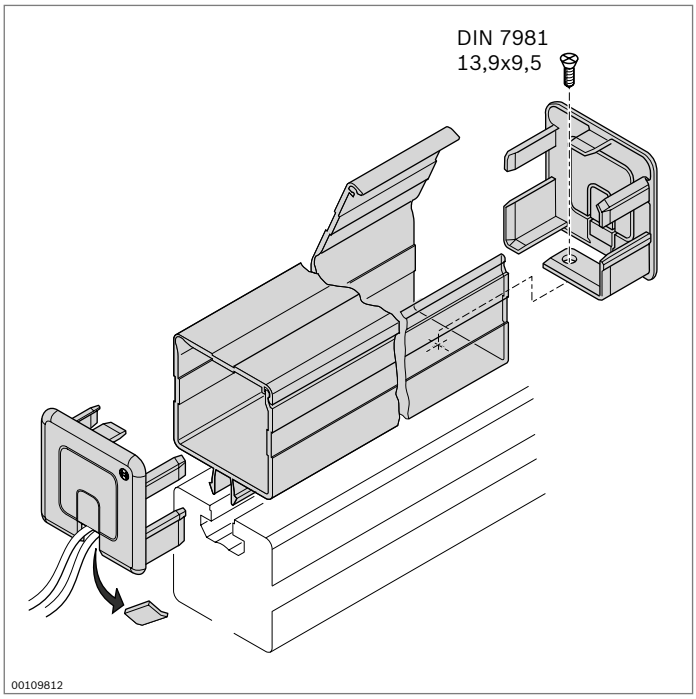

Cable duct

- Cable duct for routing electrical lines
- Captive cover
- Really easy to access
- Large usable volume
- Simple, fast assembly – just clips into the 10 mm slot
- Cover cap for sealing the cable duct with pre-punched holes for running cables through

Accessories, required:
Screw DIN 7981 3.9 x 9.5 for fastening the cover cap on the cable duct

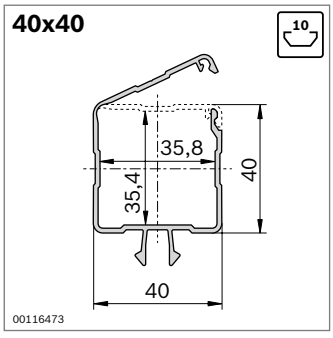

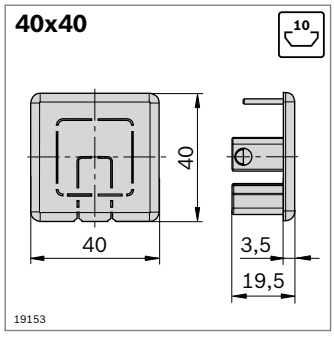

	L (mm)		No.
Cable duct 40x40	2000	1	**3 842 532 363**
Cover cap 40x40		10	**3 842 535 921**

Material: Cable duct: PVC, black
Cover cap: PA; black

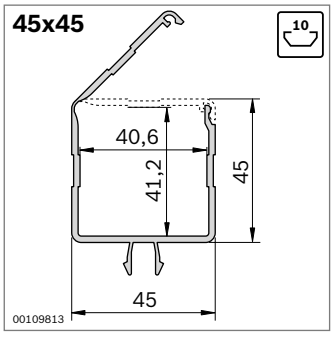

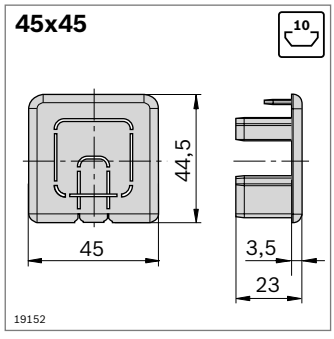

	L (mm)		No.
Cable duct 45x45	2000	1	**3 842 523 014**
Cover cap 45x45		10	**3 842 535 676**

Material: Cable duct: PVC, black
Cover cap: PA; black

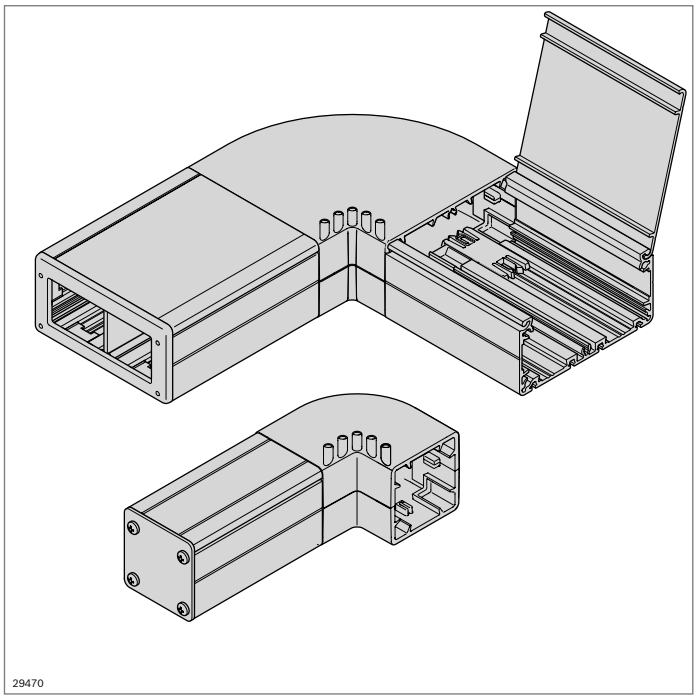

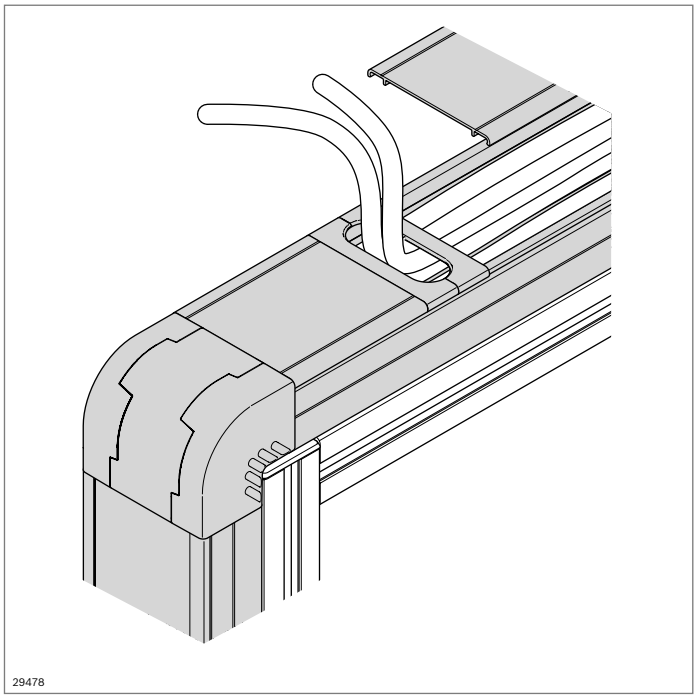

Aluminum cable duct

10

- Can be either clipped or screwed onto the support profile
- Sizes 40x40, 40x80, 80x40, 80x80
- Drilling aids for easy machining
- Dovetail attachment option
- Suitable for installing on profiles with modular dimensions of 40 and 45 mm
- Interior can be divided into sections (size 80x40 and 80x80) for laying different electric cables (EMC) or lines
- ESD-conductive
- High-quality, attractive-looking external finish due to anodized duct surface and cover plate
- Edge protector for protecting the cables/lines from being damaged on rough edges
- PG screw fastenings possible in the side wall and cover plate (mechanical finishing)
- Fitting of sockets, switches etc. possible (mechanical finishing)
- Screw holes for secure fastening of the cover plate
- Cable duct cover can be screwed to the bearing/support structure
- VDE certified
- Compliant with DIN EN 50085-1 and 50085-2-1 standards

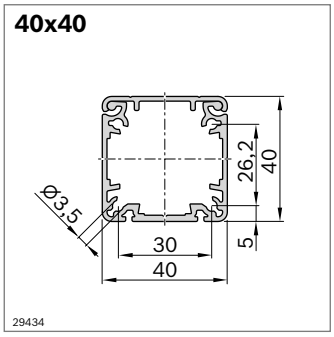

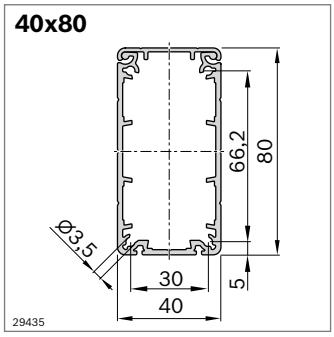

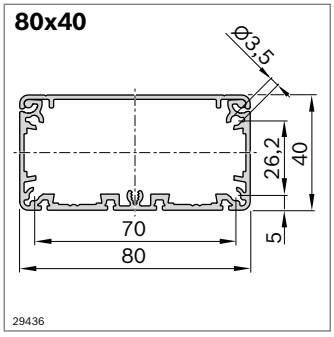

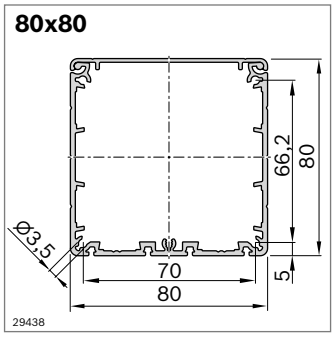

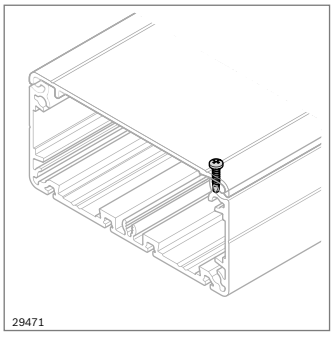

Aluminum cable duct

- Cable duct pre-assembled (cover and bearing/support structure)
- Usable length 3000 mm (delivered in 3100 mm lengths)
- Cover can be secured with a self-tapping screw

Accessories, optional: self-tapping screw **3 842 552 267**

Cable duct with AL cover plate		**L** (mm)	**No.**
12 pcs	**40x40**	3000	**3 842 552 268**
12 pcs	**40x80**	3000	**3 842 552 270**
12 pcs	**80x40**	3000	**3 842 552 273**
6 pcs	**80x80**	3000	**3 842 552 275**
Material:	aluminum, anodized		

Self-tapping screw

- For securing the cover plate on the cable duct
- Produces conductive connection between the cover plate and cable duct

Self-tapping screw		**No.**
Ze. Pi. 3.5 x 9.5	10	**3 842 552 267**
Material:	steel; galvanized	

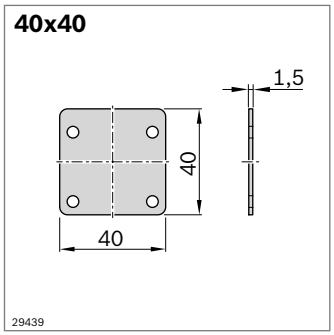

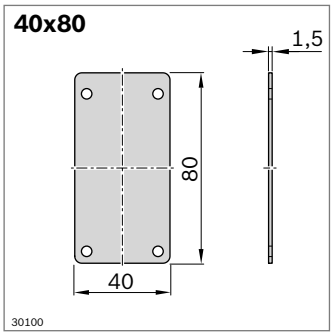

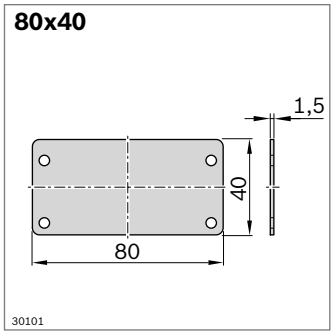

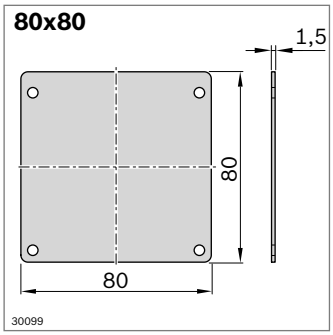

Cover plate

- Seals the end face of the cable duct
- Fastened securely with screws
- Openings for PG screw fastenings can be provided through mechanical finishing

Cover plate		No.
40x40	10	**3 842 552 249**
40x80	10	**3 842 552 250**
80x40	10	**3 842 552 251**
80x80	10	**3 842 552 252**

Material: Cover plate: aluminum, anodized
Pressed edges: aluminum, plain
Screw: steel; galvanized

Scope of delivery: Cover plate incl. fastening screws

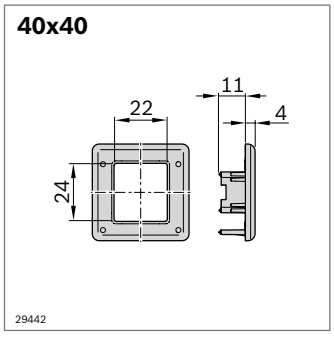

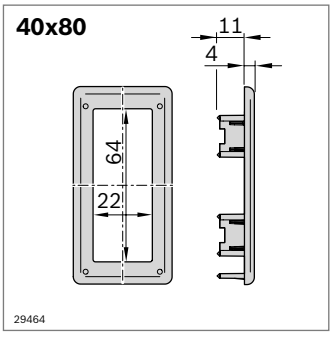

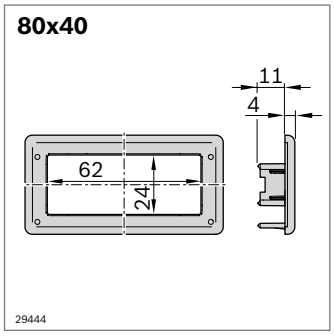

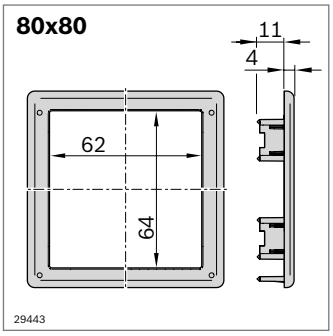

Edge protector

- Used to protect the cables if there is an end-face cable outlet
- Can be pushed and also screwed into position
- Can be used to protect the cable at lateral outlets

Edge protector		No.
40x40	10	**3 842 552 253**
40x80	10	**3 842 552 254**
80x40	10	**3 842 552 255**
80x80	10	**3 842 552 256**

Material: PP; signal gray RAL 7004

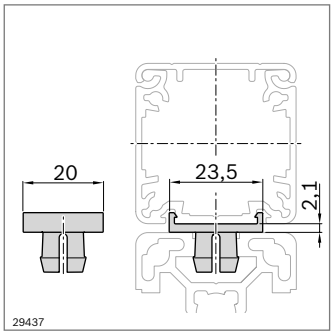

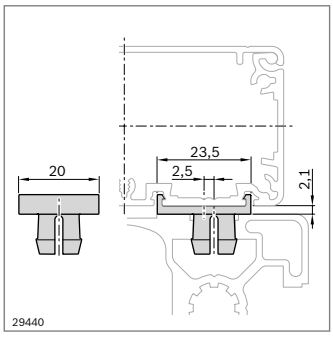

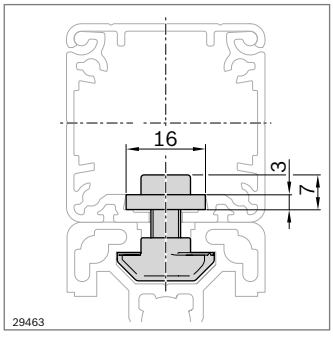

Mounting base

- For machining-free mounting of the cable duct on the support profile
- Insulates the cable duct from the support profile

Symmetrical mounting base

- “Symmetrical” design for central mounting of the cable duct on profiles with just one slot on the mounting side, and on multi-slot profiles with 40 mm modular dimension

Mounting base		No.
Symmetrical	10	**3 842 552 247**
Material:	PP; signal gray RAL 7004	

Symmetrical mounting base

- “Symmetrical” design for central mounting on profiles with multiple slots on the mounting side and 45 mm modular dimension

Mounting base		No.
Asymmetrical	10	**3 842 552 248**
Material:	PP; signal gray RAL 7004	

Fastening kit

- For screwing the cable duct to the support profile
- Secure force transmission without deformation of the mounting surface
- Cable duct has to be drilled (diameter: 6.4 mm)
- Recommendation: insert every 500 mm

Fastening kit		No.
10	10	**3 842 548 997**
Material:	Steel; galvanized	
Scope of delivery:	Insert sheet; T-nut M6, 10 mm slot; screw M6x16	

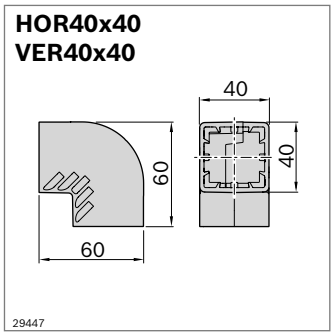

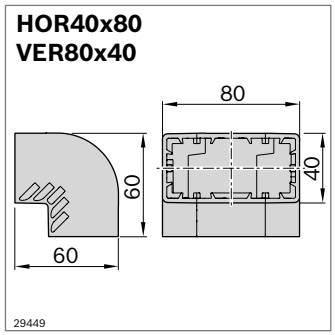

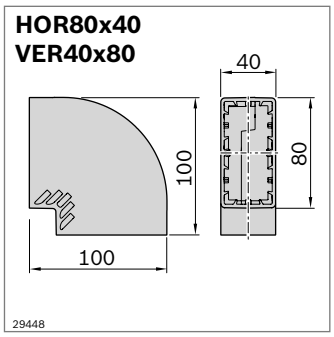

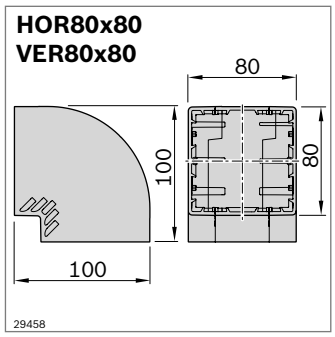

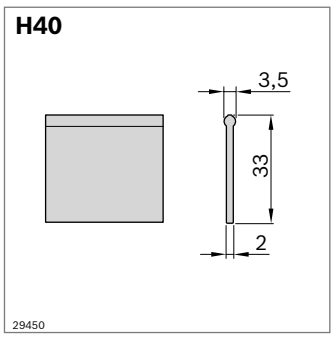

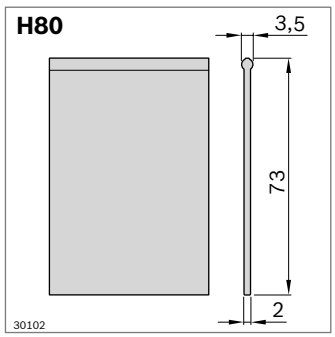

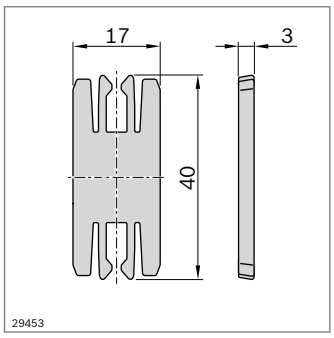

Curve

- 90° curve in horizontal and vertical direction
- Modular design
- Cable ducts connected together with push-in connecting elements
- Cable ducts can be made conductive by using supplied potential equalizing cable

Curve		No.
HOR40x40; VER40x40	1	**3 842 552 257**
HOR40x80; VER80x40	1	**3 842 552 258**
HOR80x40; VER40x80	1	**3 842 552 259**
HOR80x80; VER80x80	1	**3 842 552 260**

Material: PP; signal gray RAL 7004

Scope of delivery: Curve, connecting elements, potential equalizing cable

Dividing strip

- Divides the cable duct into 2 chambers for carrying different electric cables, e.g. electricity and data cables
- Push-in installation
- Bendable, so it can also be used on curves

Dividing strip		No.
H40 L=3000 mm	10	**3 842 552 245**
H80 L=3000 mm	10	**3 842 552 246**

Material: PP; signal gray RAL 7004

Connecting element

- Extension of ends of cable ducts
- For connecting cable duct with curve
- ESD-conductivity of both cable ducts can be established by using an overlapping cover and self-tapping screw (p. 11-4)

Connecting element		No.
	10	**3 842 552 240**

Material: PP; signal gray RAL 7004

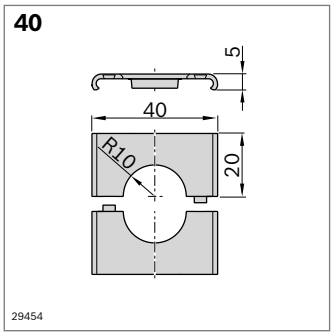

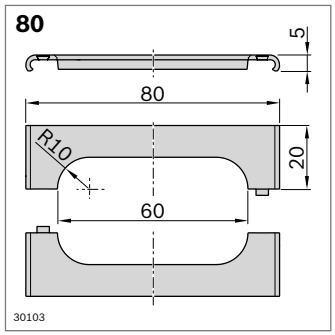

Cable hole

- For passing cables through within the cover

Cable hole		No.
40	10	**3 842 553 973**
80	10	**3 842 553 974**

Material: PP; signal gray RAL 7004

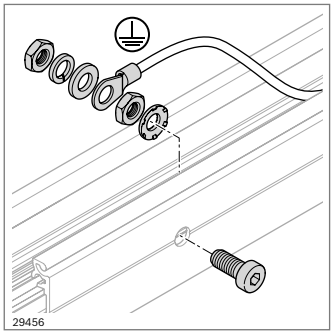

Potential equalizer

- DIN EN 0100-410 compliant:
- For connecting the cable duct to an earthed protective conductor

Potential equalizer		No.
10	10	**3 842 552 263**

Material: steel; galvanized

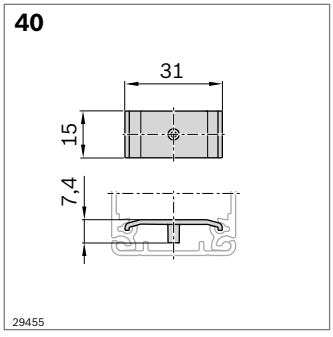

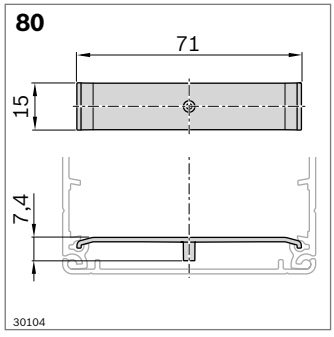

Cable holder

- For fixing the cable in the cable duct in the case of overhead mounting
- Recommendation: insert every 200 mm

Cable holder		No.
40	10	**3 842 552 265**
80	10	**3 842 552 266**

Material: PA6; signal gray RAL 7004

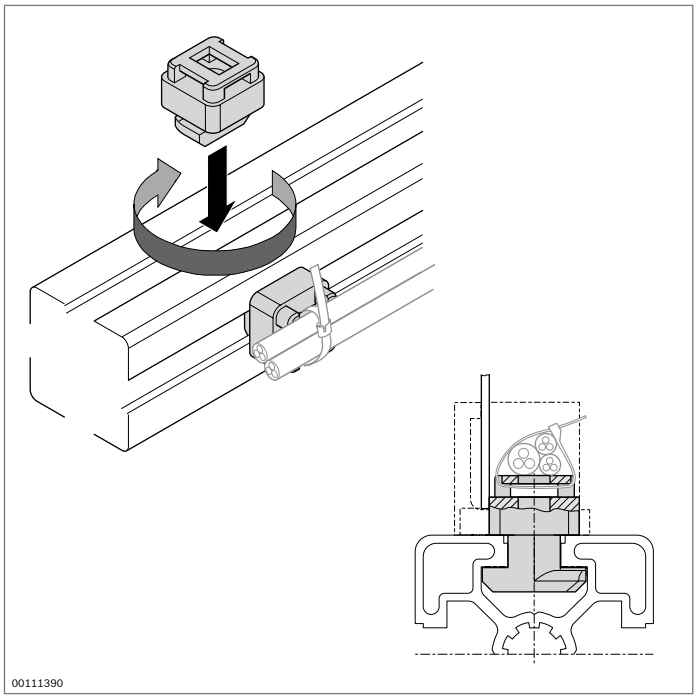

Cable bracket

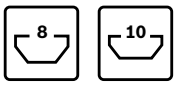

- Cable bracket for fastening individual cables with cable ties
- For use behind panels or screens
- Dimensioned to match the Variofix block for slot 10 mm

Accessories, required:
Cableties

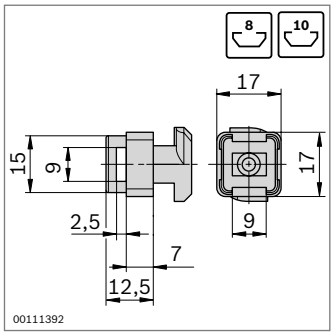

Cable bracket	Slot		No.
	8	100	**3 842 526 565**
	10	100	**3 842 526 564**

Material: PA; black

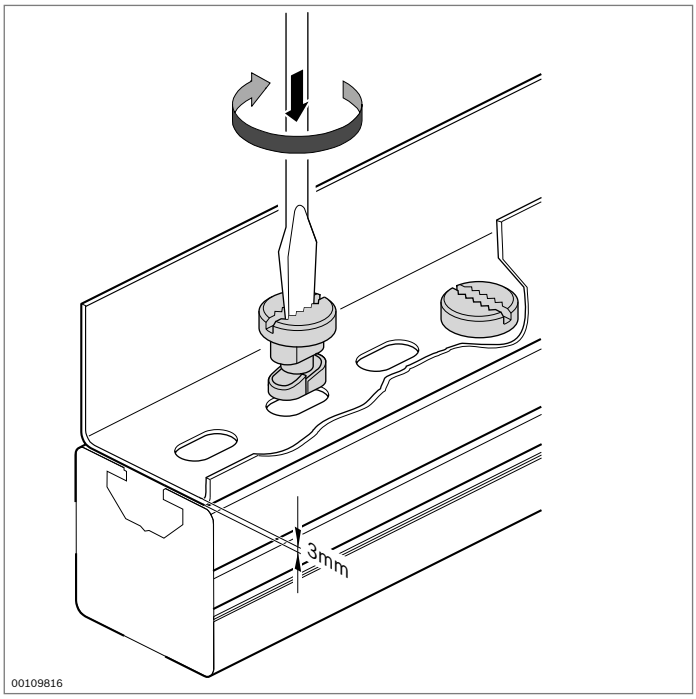

Quick-lock

- Quick-lock for fastening standard commercially available cable ducts

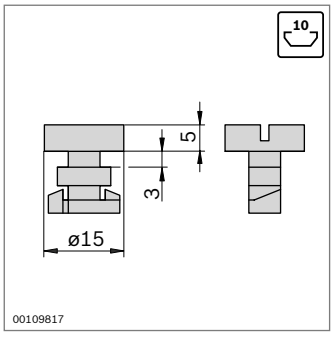

Quick-lock		No.
	100	**3 842 146 920**

Material: PA; black

Elements for manual movement

Slide hangers, spring hooks (p. 12-2)

Sliders for surface element (p. 12-3)

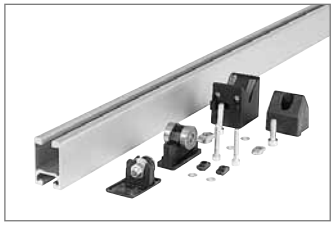

Components for sliding door (p. 12-4)

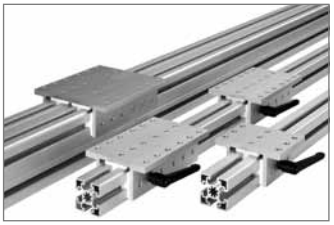

EcoSlide (p. 12-6)

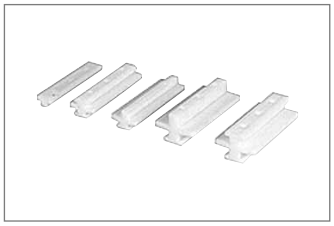

Sliders for profiles (p. 12-13)

Support rollers (p. 12-17)

Rack, pinion (p. 12-18)

Conveyor track Lean (p. 12-20)

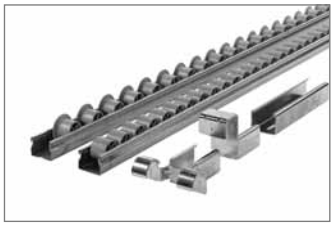

Conveyor track XLean (p. 12-25)

EcoFlow conveyor track (p. 12-28)

Profiles for installing conveyor media (p. 12-34)

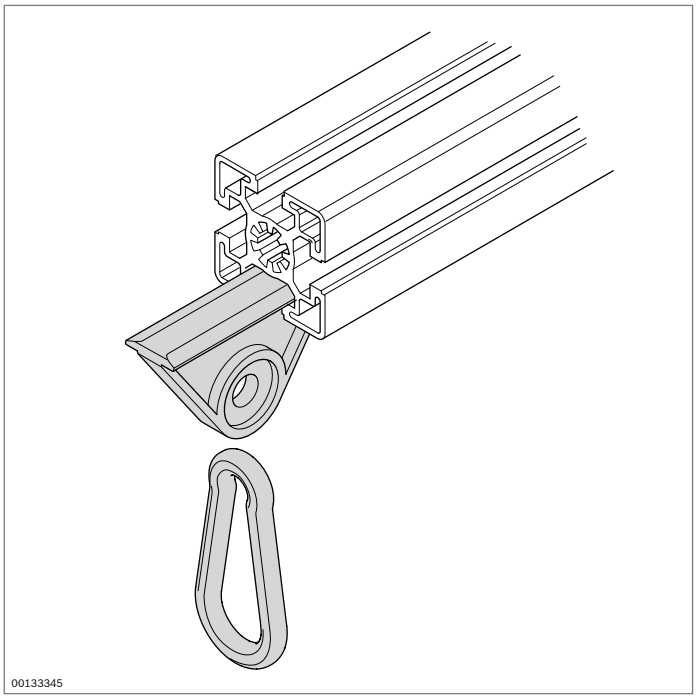

Slide hanger
Spring hook

Slide hanger

- Slide hanger as an inexpensive solution for sliding tool hangers
- Maximum load: 150 N
- Guide in the 10 mm profile slot
- Sliding block can be used as a stopper

Accessories: Sliding block as stopper (p. 3-7)

Spring hook

- Spring hook for fastening tools to the slide hanger:
  - Quick and easy to change

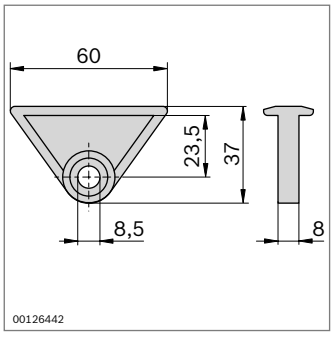

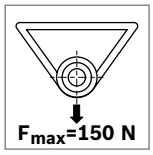

Slide hanger		No.
		3 842 218 953
Material:	POM; natural	

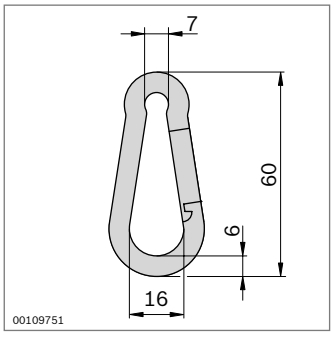

Spring hook		No.
		0 842 901 309
Material:	steel; galvanized	

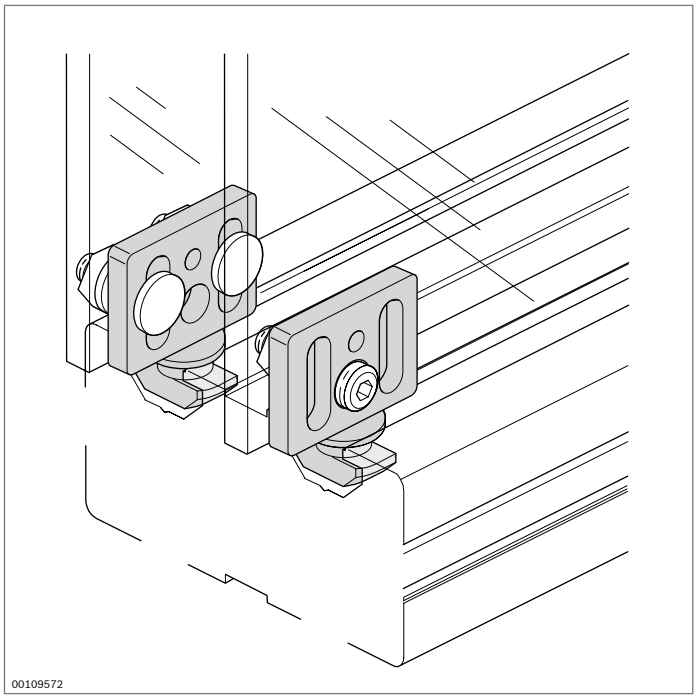

Slider for surface elements

- For the construction of sliding and lifting doors
- Good functional reliability
- For any thickness of the surface element or aluminum profile frame

Accessories, required:
screws and nuts/sliding blocks for fastening the surface elements

Accessories, optional:
counterbalance in the case of lifting doors (see p. 9-2)

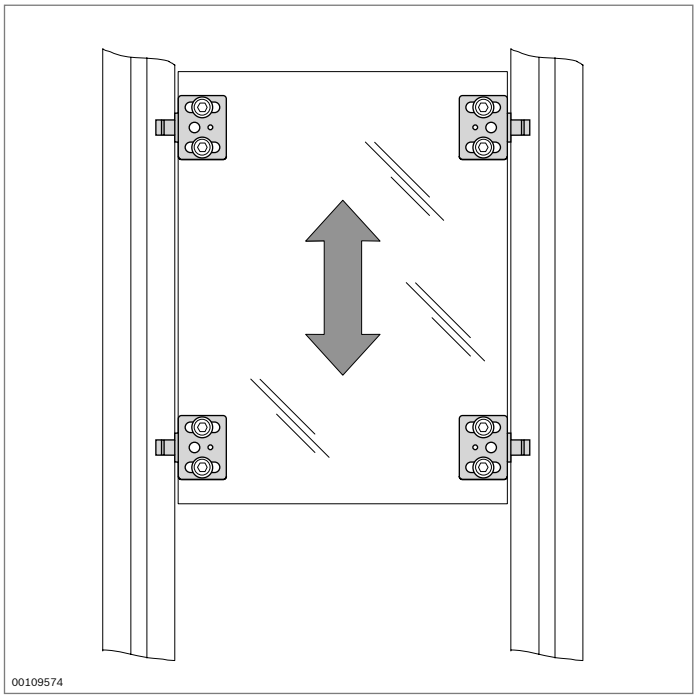

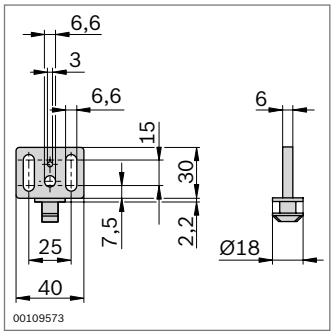

Slider		No.
	10	**3 842 530 303**

Material: POM; black

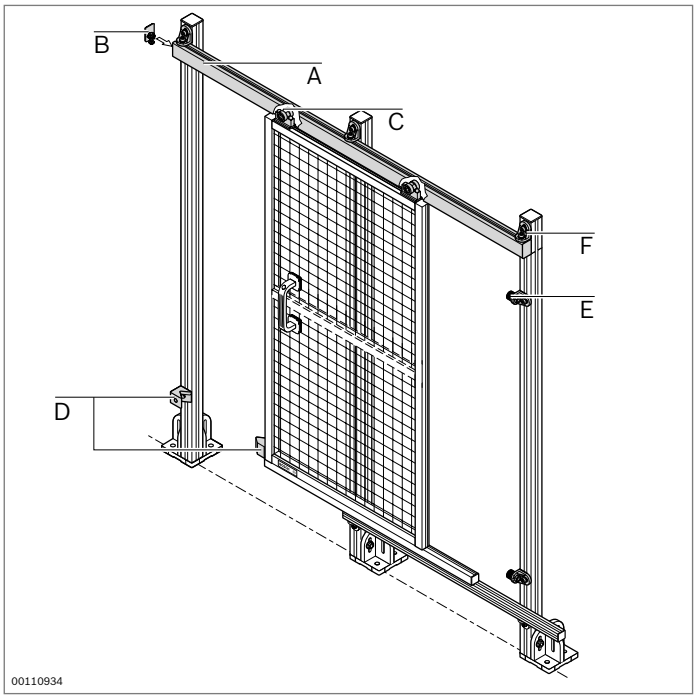

Components for sliding door

- Components for constructing sliding doors of different dimensions

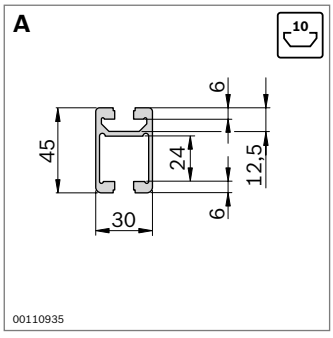

- Profile rail for trolley suspension

Profile rail		L (mm)	No.
1 pc		40 ... 5600	**3 842 992 946 / L**
20 pcs		5600	**3 842 523 598**

Material: Aluminum, natural, anodized
Accessories: Bracket set R28x38 for fastening to strut profiles with 10 mm slot (p. 12-5)

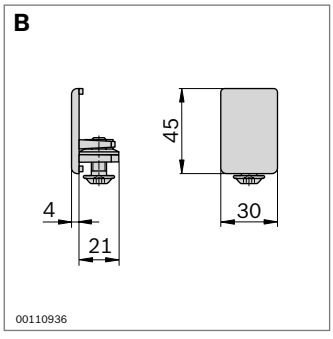

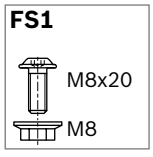

- Profile rail end piece for use as cover cap with stop
- With screw protection

End piece		No.	FS
	20	**3 842 521 513**	FS1

Material: End piece: PA; black
Fastening material: steel, galvanized
Scope of delivery: Incl. fastening material (FS)

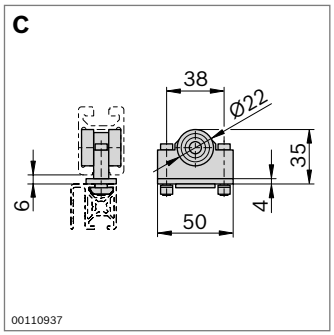

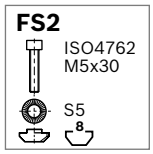

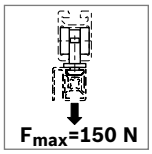

▶ Trolley with dust-proof ball bearings for smooth sliding motion

Trolley	No.	FS
	3 842 524 153	2xFS2

Material: PA, black / steel, galvanized
Fastening material: steel, galvanized
Scope of delivery: Incl. fastening material (FS)

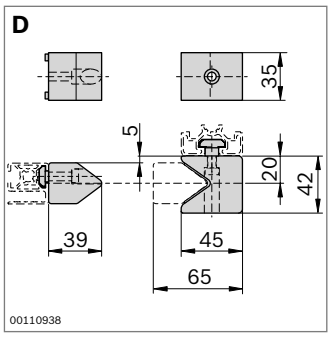

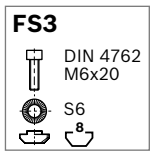

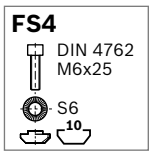

▶ Stop kit for damped closing of the sliding door

Stop kit	No.	FS
	3 842 524 490	FS3, FS4

Material: PA, black
fastening material: steel, galvanized
Scope of delivery: Incl. fastening material (FS)

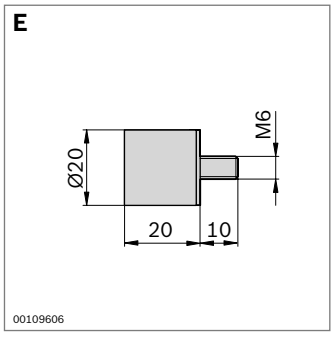

▶ Bumper for a damped stop

Bump stop		No.
	10	**3 842 510 462**

Material: Rubber; hardness 55° shore A
Accessories: Bracket set R28x38 for fastening to strut profiles with 10 mm slot

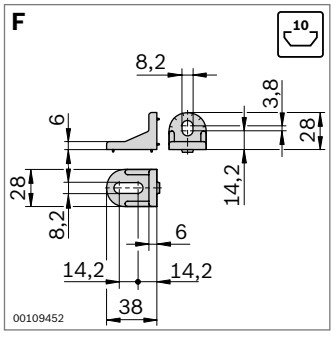

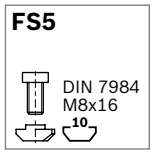

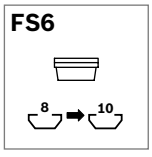

▶ Bracket for fastening the profile rail to strut profiles with 10 mm slot

Bracket set	Slot	ESD	No.	FS
R28x38 set (standard)	10 / 10		**3 842 521 580**	2xFS5, 4xFS6

Material: Diecast zinc
Fastening material: steel, galvanized
Scope of delivery: Incl. fastening material (FS)

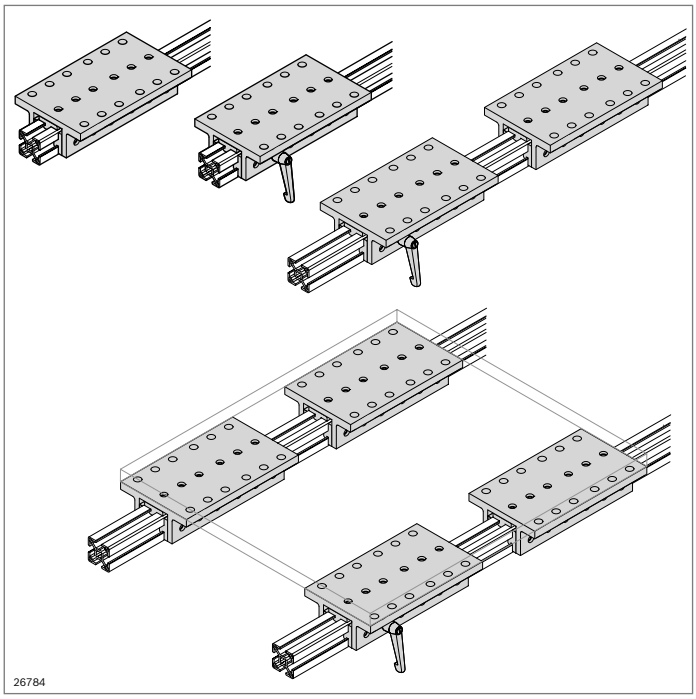

EcoSlide

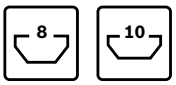

- Economical linear sliding carriage for horizontal applications
- Runs on sliders for maximal load capacity
- Slider with low moisture absorption, suitable for rough usage conditions
- Available for profile widths of 30/45/60/90
- Clamping lever (optional) for arresting in any position
- Easy to assemble
- Spacer washer for tolerance adjustment (carriage/profile)

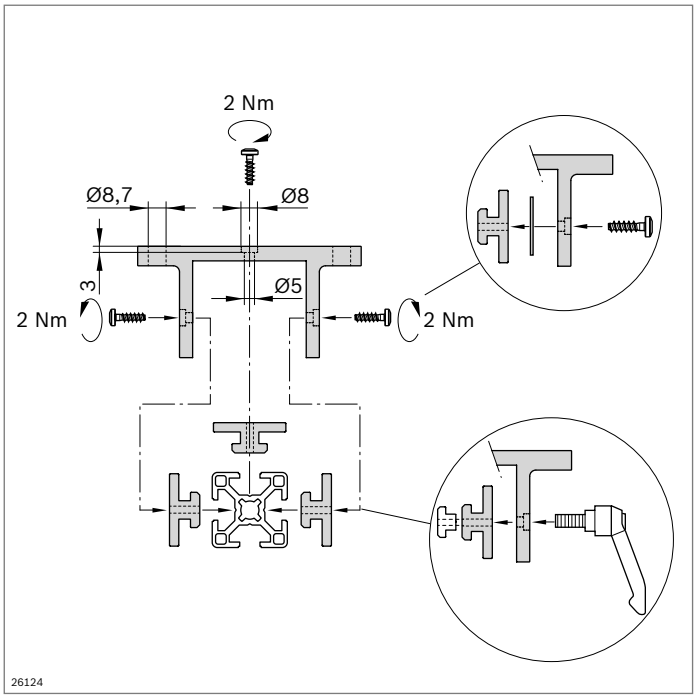

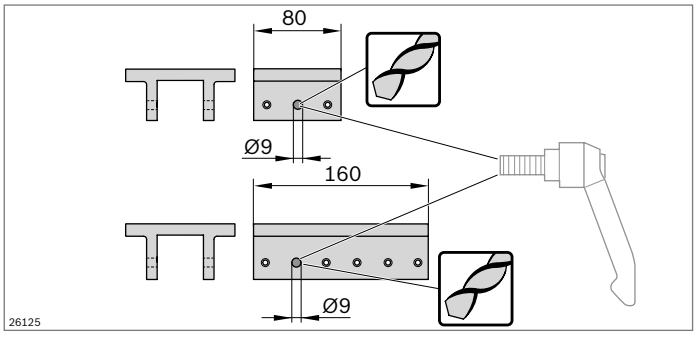

Machining tip

To install the clamping lever, the corresponding 9 mm hole must be drilled in the trolley.

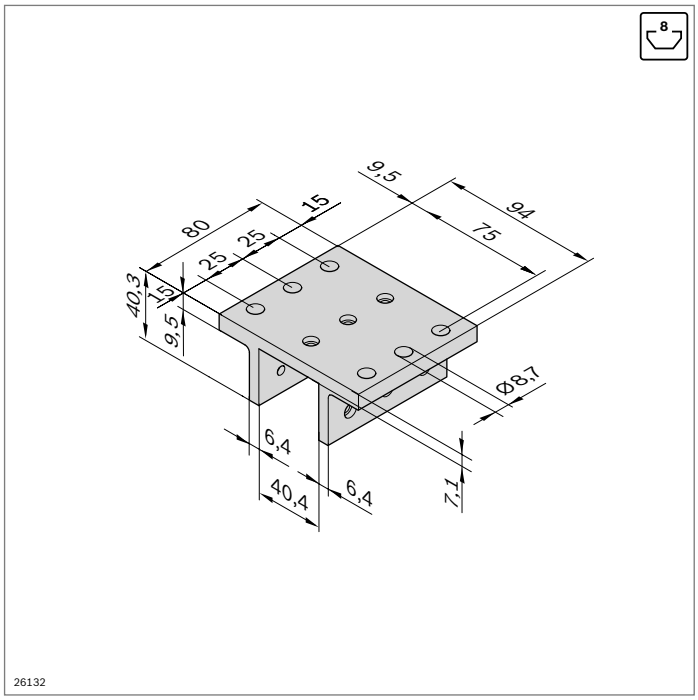

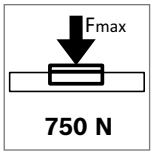

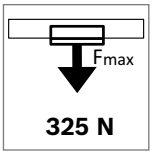

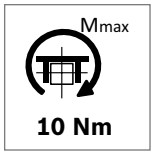

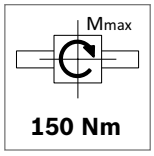

EcoSlide 30x30x80

- For use with profile width 30 mm
- Maximum sliding speed: 12 m/min

Trolley 30x30x80		No.
	1	**8 981 535 476**

Material: aluminum, anodized

Accessories

		No.	Qty.	Qty.	Page
Slider, groove 8 mm flat	10	**3 842 523 212**	3	2	12-13
Slider, groove 8 mm flat lockable	1	**3 842 552 423**	–	1	12-11
Spacer washer, slot 8 mm	4	**8 981 535 891**	X[1]	X[1]	12-12
Screw W1451 - 3.5x14 - 10.9	10	**3 842 552 421**	9	8	12-12
Clamping lever, 20 mm	1	**3 842 516 846**	–	1	4-11
Sliding block, slot 8 mm; M8	100	**3 842 514 931**	–	1	3-7

[1] If required

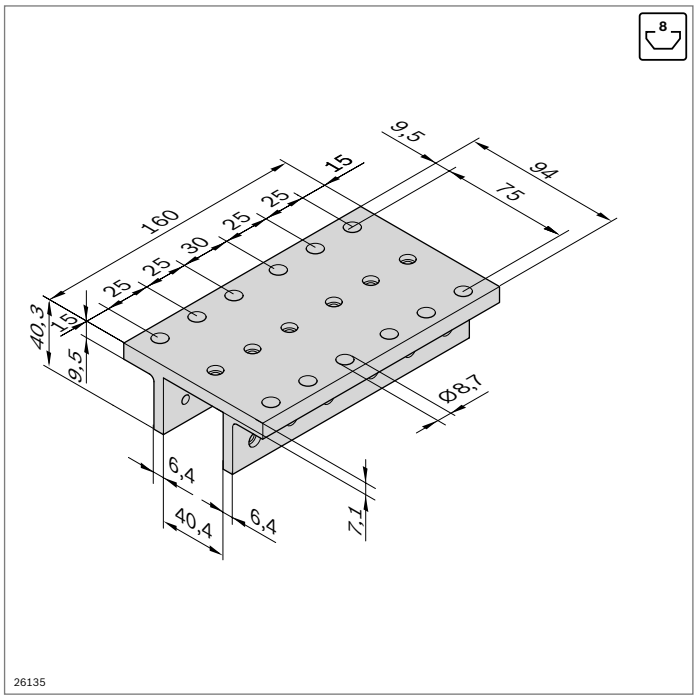

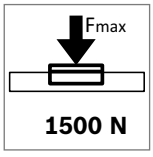

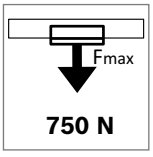

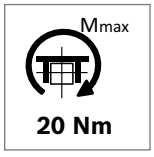

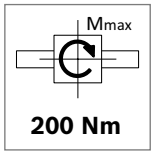

EcoSlide 30x30x160

- For use with profile width 30 mm
- Maximum sliding speed: 12 m/min

Trolley 30x30x160		No.
	1	**8 981 535 477**

Material: Aluminum, anodized

Accessories

		No.	Qty.	Qty.	Page
Slider, groove 8 mm flat	10	**3 842 523 212**	6	5	12-13
Slider, groove 8 mm flat lockable	1	**3 842 552 423**	–	1	12-11
Spacer washer, slot 8 mm	4	**8 981 535 891**	X[1]	X[1]	12-12
Screw W1451 - 3.5x14 - 10.9	10	**3 842 552 421**	18	17	12-12
Clamping lever, 20 mm	1	**3 842 516 846**	–	1	4-11
Sliding block, slot 8 mm; M8	100	**3 842 514 931**	–	1	3-7

[1] If required

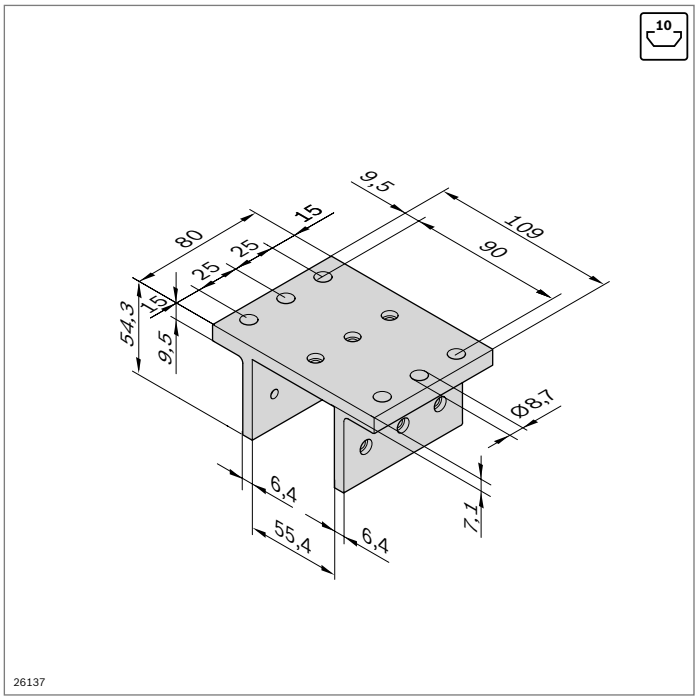

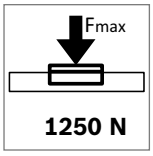

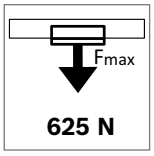

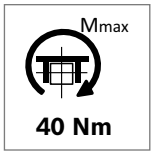

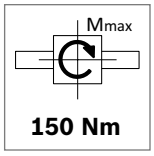

EcoSlide 45x45x80

- For use with profile width 45 mm
- Maximum sliding speed: 12 m/min

Trolley 45x45x80		No.
	1	**8 981 535 323**

Material: aluminum, anodized

Accessories

		No.	Qty.	Qty.	Page
Slider, slot 10 mm flat	10	**3 842 530 329**	3	2	12-13
Slider, slot 10 mm flat lockable	1	**3 842 552 424**	–	1	12-11
Spacer washer, slot 10 mm	4	**8 981 535 890**	X[1]	X[1]	12-12
Screw W1452 - 4x18 - 10.9	10	**3 842 552 422**	9	8	12-12
Clamping lever, 20 mm	1	**3 842 516 846**	–	1	4-11
Sliding block, slot 10 mm; M8	100	**3 842 528 735**	–	1	3-7

[1] If required

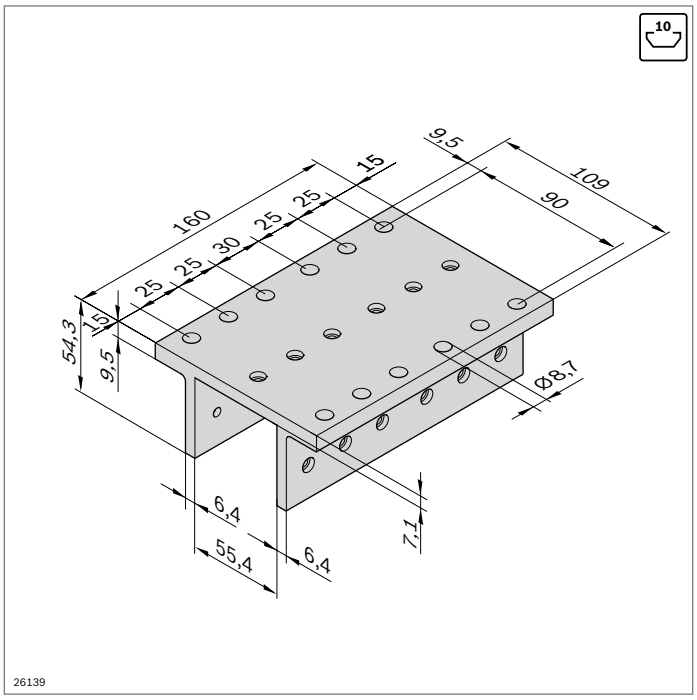

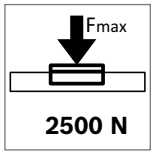

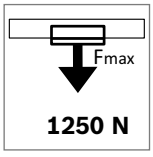

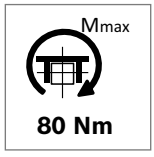

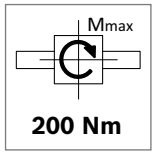

EcoSlide 45x45x160

- For use with profile width 45 mm
- Maximum sliding speed: 12 m/min

Trolley 45x45x160		No.
	1	**8 981 535 324**

Material: Aluminum, anodized

Accessories

		No.	Qty.	Qty.	Page
Slider, slot 10 mm flat	10	**3 842 530 329**	6	5	12-13
Slider, slot 10 mm flat lockable	1	**3 842 552 424**	–	1	12-11
Spacer washer, slot 10 mm	4	**8 981 535 890**	X[1]	X[1]	12-12
Screw W1452 - 4x18 - 10.9	10	**3 842 552 422**	18	17	12-12
Clamping lever, 20 mm	1	**3 842 516 846**	–	1	4-11
Sliding block, slot 10 mm; M8	100	**3 842 528 735**	–	1	3-7

[1] If required

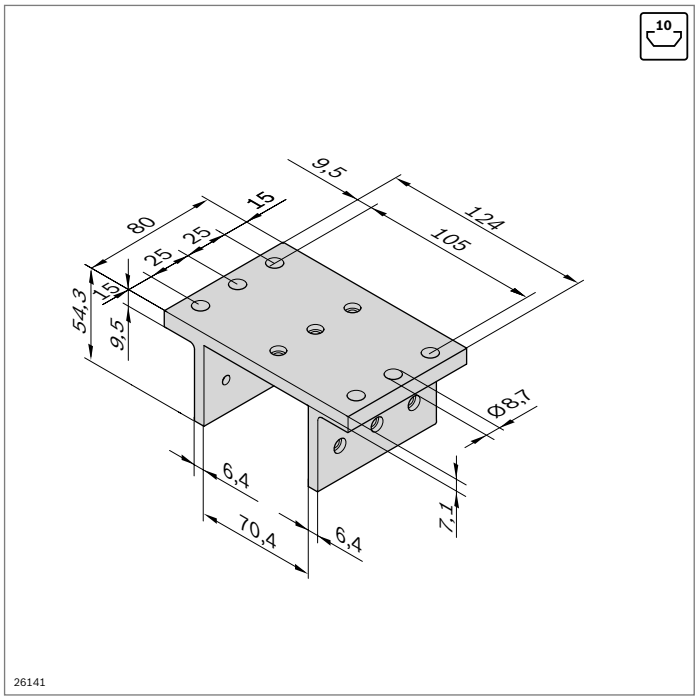

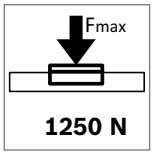

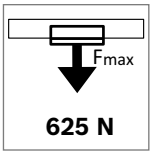

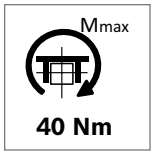

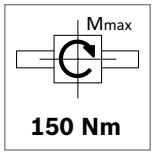

EcoSlide 45x60x80

- For use with profile width 60 mm
- Maximum sliding speed: 12 m/min

Trolley 45x60x80		No.
	1	**8 981 535 478**

Material: aluminum, anodized

Accessories

		No.	Qty.	Qty.	Page
Slider, slot 10 mm flat	10	**3 842 530 329**	3	2	12-13
Slider, slot 10 mm flat lockable	1	**3 842 552 424**	–	1	12-11
Spacer washer, slot 10 mm	4	**8 981 535 890**	X[1]	X[1]	12-12
Screw W1452 - 4x18 - 10.9	10	**3 842 552 422**	9	8	12-12
Clamping lever, 20 mm	1	**3 842 516 846**	–	1	4-11
Sliding block, slot 10 mm; M8	100	**3 842 528 735**	–	1	3-7

[1] If required

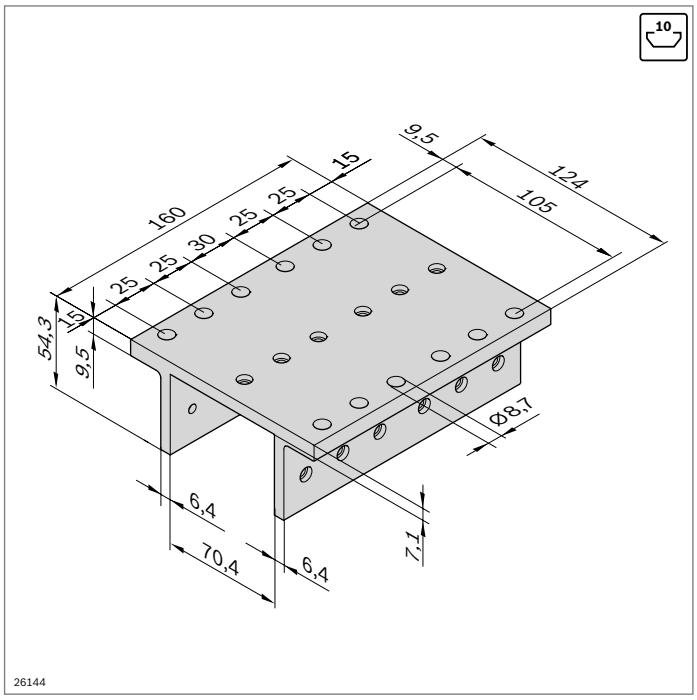

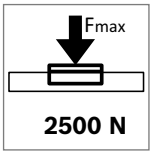

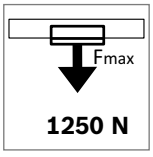

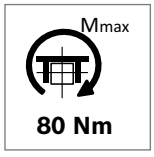

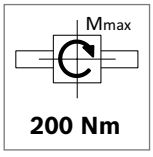

EcoSlide 45x60x160

- For use with profile width 60 mm
- Maximum sliding speed: 12 m/min

Trolley 45x60x160		No.
	1	**8 981 535 479**

Material: Aluminum, anodized

Accessories

		No.	Qty.	Qty.	Page
Slider, slot 10 mm flat	10	**3 842 530 329**	6	5	12-13
Slider, slot 10 mm flat lockable	1	**3 842 552 424**	–	1	12-11
Spacer washer, slot 10 mm	4	**8 981 535 890**	X[1]	X[1]	12-12
Screw W1452 - 4x18 - 10.9	10	**3 842 552 422**	18	17	12-12
Clamping lever, 20 mm	1	**3 842 516 846**	–	1	4-11
Sliding block, slot 10 mm; M8	100	**3 842 528 735**	–	1	3-7

[1] If required

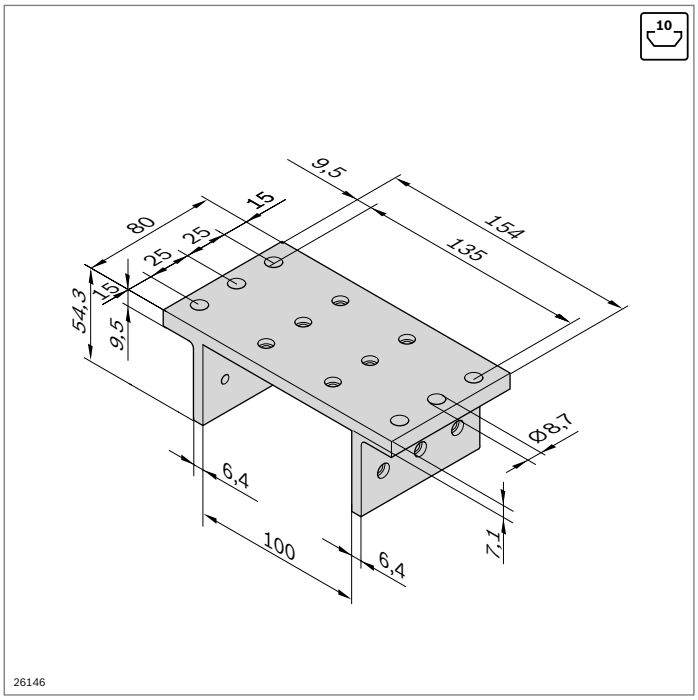

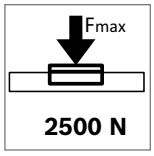

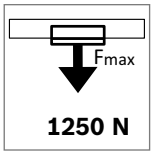

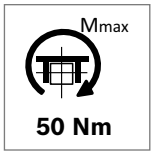

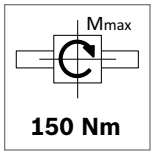

EcoSlide 45x90x80

- For use with profile width 90 mm
- Maximum sliding speed: 12 m/min

Trolley 45x90x80		No.
	1	**8 981 535 325**

Material: Aluminum, anodized

Accessories

		No.	Qty.	Qty.	Page
Slider, slot 10 mm flat	10	**3 842 530 329**	4	3	12-13
Slider, slot 10 mm flat lockable	1	**3 842 552 424**	–	1	12-11
Spacer washer, slot 10 mm	4	**8 981 535 890**	X[1]	X[1]	12-12
Screw W1452 - 4x18 - 10.9	10	**3 842 552 422**	12	11	12-12
Clamping lever, 20 mm	1	**3 842 516 846**	–	1	4-11
Sliding block, slot 10 mm; M8	100	**3 842 528 735**	–	1	3-7

[1] If required

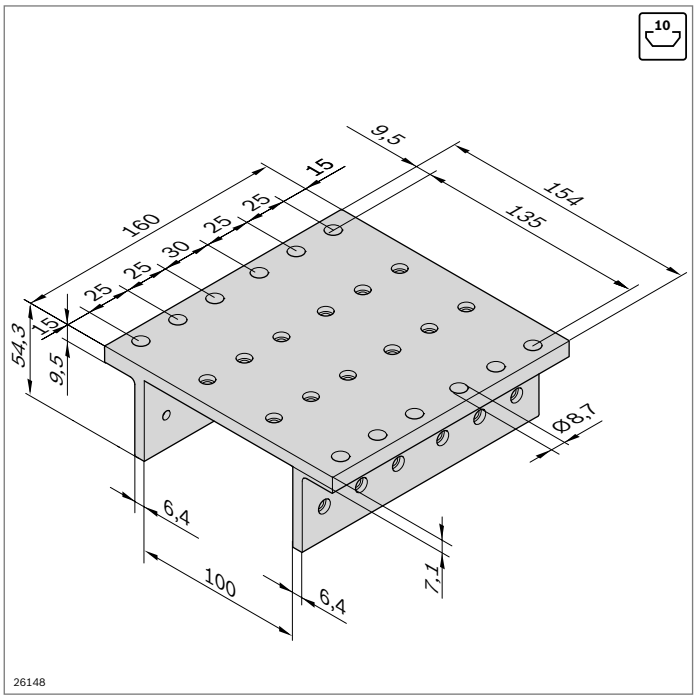

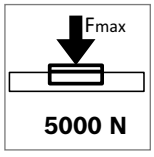

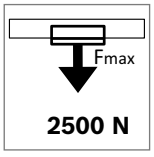

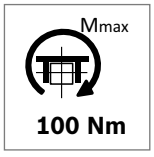

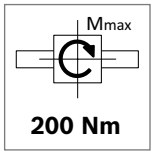

EcoSlide 45x90x160

- For use with profile width 90 mm
- Maximum sliding speed: 12 m/min

Trolley 45x90x160		No.
	1	**8 981 535 326**

Material: Aluminum, anodized

Accessories

		No.	Qty.	Qty.	Page
Slider, slot 10 mm flat	10	**3 842 530 329**	8	7	12-13
Slider, slot 10 mm flat lockable	1	**3 842 552 424**	–	1	12-11
Spacer washer, slot 10 mm	4	**8 981 535 890**	X[1]	X[1]	12-12
Screw W1452 - 4x18 - 10.9	10	**3 842 552 422**	24	23	12-12
Clamping lever, 20 mm	1	**3 842 516 846**	–	1	4-11
Sliding block, slot 10 mm; M8	100	**3 842 528 735**	–	1	3-7

[1] If required

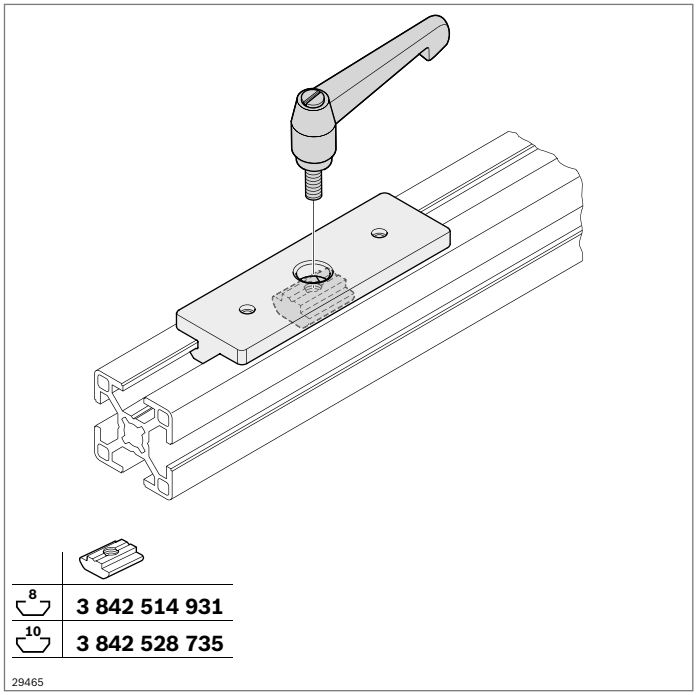

Slider, flat lockable

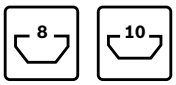

- Suitable for clamping using a sliding block and a clamping lever
- For constructing low-wear guides

Accessories:
Sliding blocks (p. 3-7)

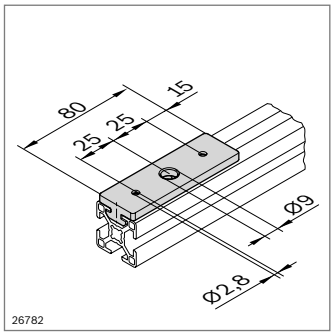

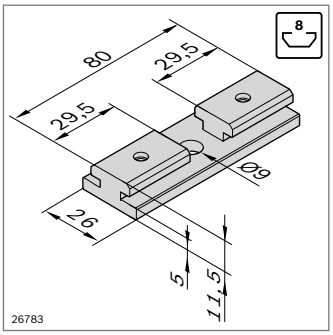

Slider, flat lockable	Slot		No.
	8	1	**3 842 552 423**

Material: POM; natural
Accessories: Sliding block, T-nut, slot 8 (M8), 3 842 514 931, p. 3-7

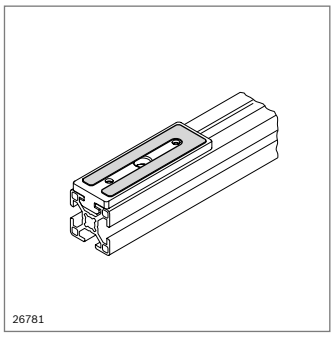

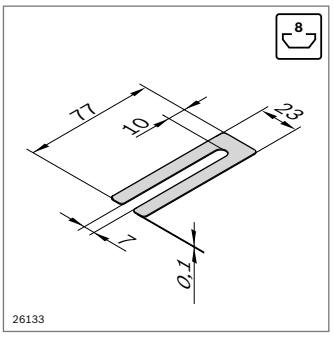

Spacer washer	Slot		No.
77x23	8	4	**8 981 535 891**

Material: Steel, plain

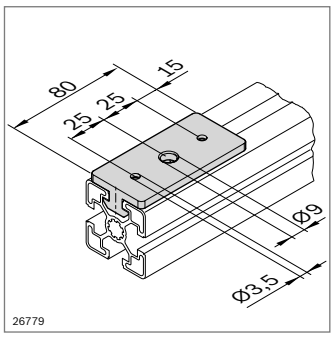

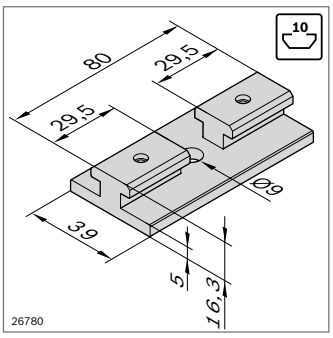

Slider, flat lockable	Slot		No.
	10	1	**3 842 552 424**

Material: POM; natural
Accessories: Sliding block, T-nut, slot 10 (M8), 3 842 528 735, p. 3-7

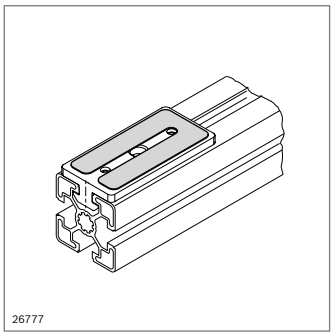

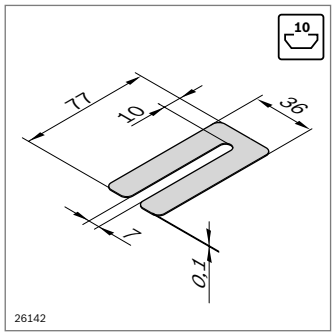

Spacer washer	Slot		No.
77x36	10	4	**8 981 535 890**

Material: Steel, plain

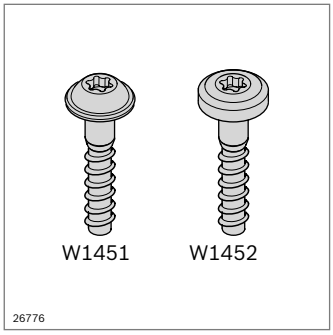

Plastic self-tapping screw	Slot		No.
W1451 - 3.5x14 - 10.9	8	10	**3 842 552 421**
W1452 - 4x18 - 10.9	10	10	**3 842 552 422**

Material: Steel, galvanized

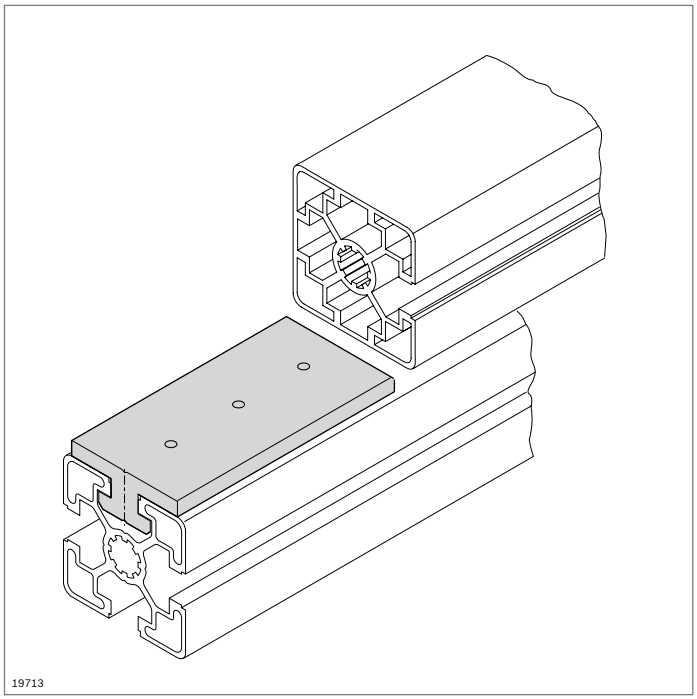

Slider for profiles

Slider

- For the construction of low-wear guides, e.g. for manual sliding and sliding and lifting doors, as well as drawer slides

Accessories, optional:
Sheet metal screws for fastening the slider in a profile slot

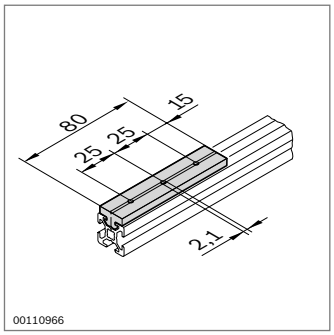

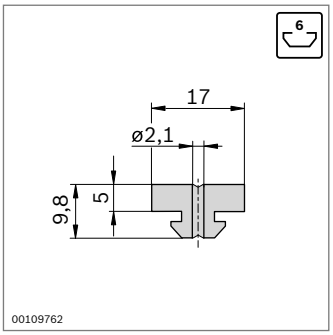

Slider, flat		No.
	10	**3 842 523 213**

Material: POM; natural

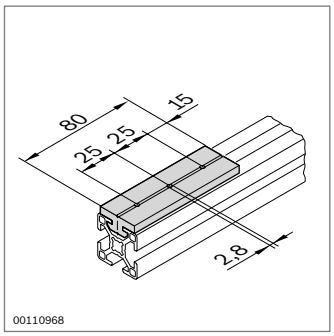

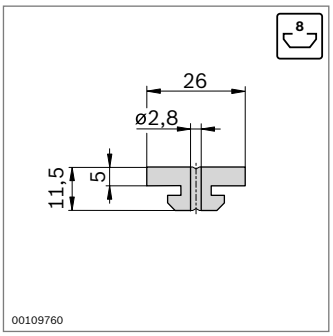

Slider, flat		No.
	10	**3 842 523 212**

Material: POM; natural

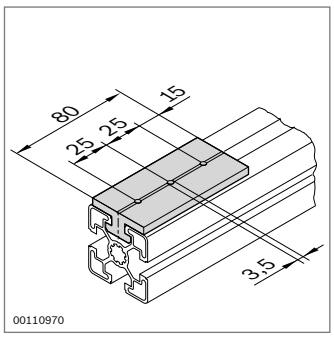

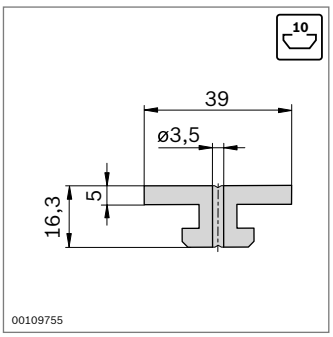

Slider, flat		No.
	10	**3 842 530 329**

Material: POM; natural

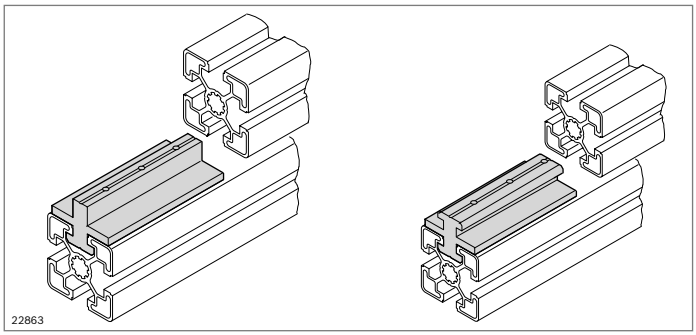

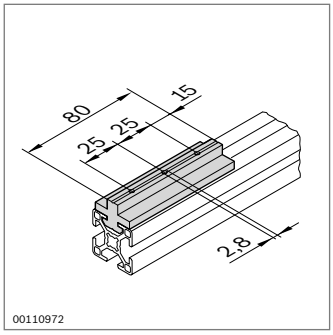

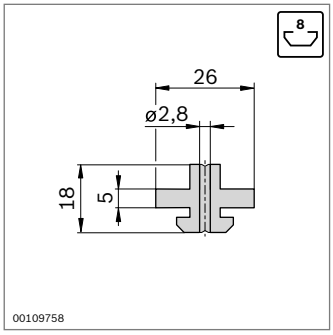

Slider, center		No.
	10	**3 842 523 210**

Material: POM; natural

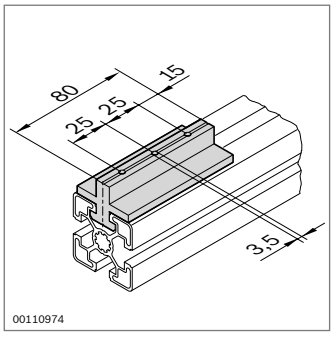

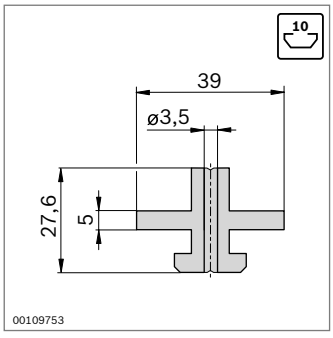

Slider, center		No.
	10	**3 842 523 206**

Material: POM; natural

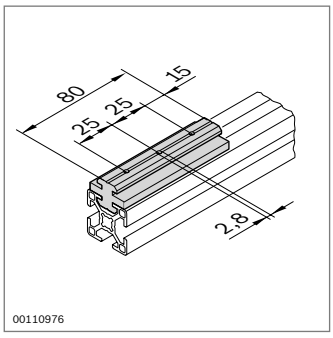

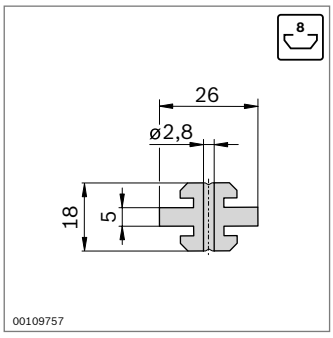

Slider, center		No.
	10	**3 842 523 209**

Material: POM; natural

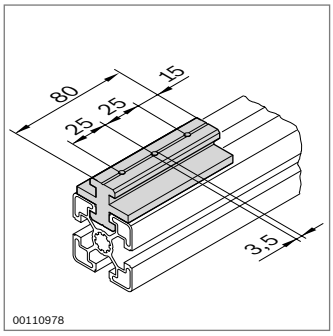

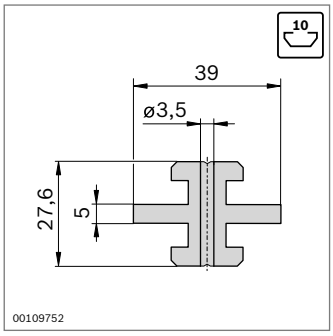

Slider, center		No.
	10	**3 842 523 205**

Material: POM; natural

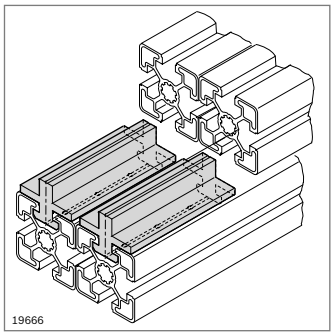

Offset sliders

- For constructing multiple sliding doors

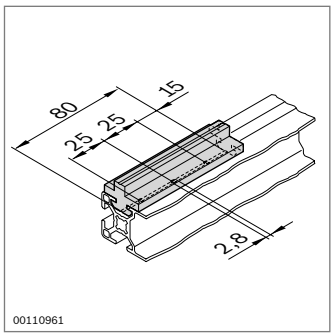

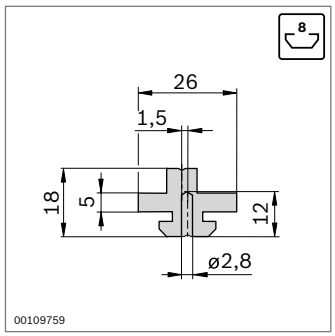

Slider, offset		No.
	10	**3 842 523 211**

Material: POM; natural

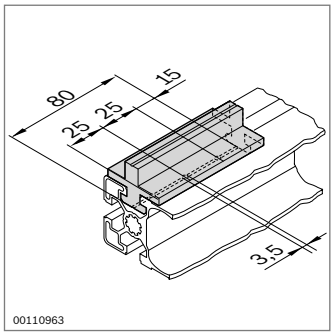

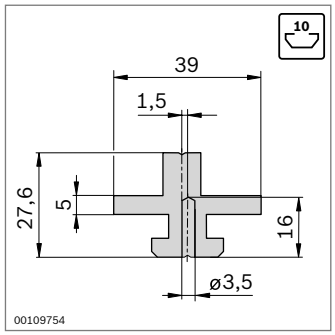

Slider, offset		No.
	10	**3 842 523 207**

Material: POM; natural

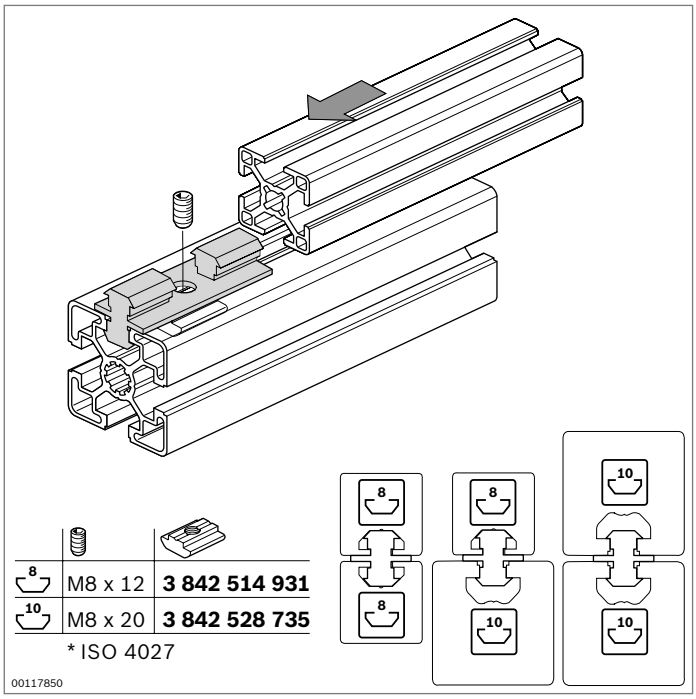

8	M8 x 12	**3 842 514 931**
10	M8 x 20	**3 842 528 735**

* ISO 4027

Multi-slider

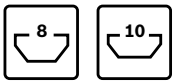

- Multi-slider for constructing low-wear guides
- Suitable for all profiles with 8 mm and 10 mm slot widths
- Combination of profiles with different slot widths possible

Accessories:
grub screws (ISO 4027) and sliding blocks (p. 3-7) for fastening the slider in the profile slot

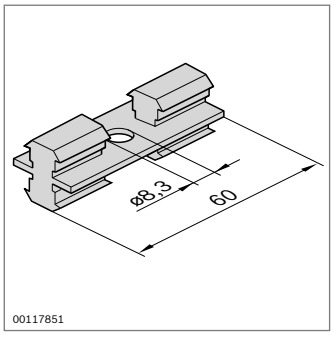

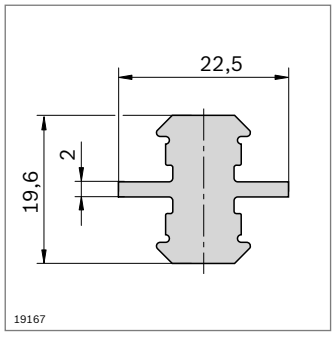

Multi-slider 8/10		**No.**
	10	**3 842 513 517**

Material: POM; natural

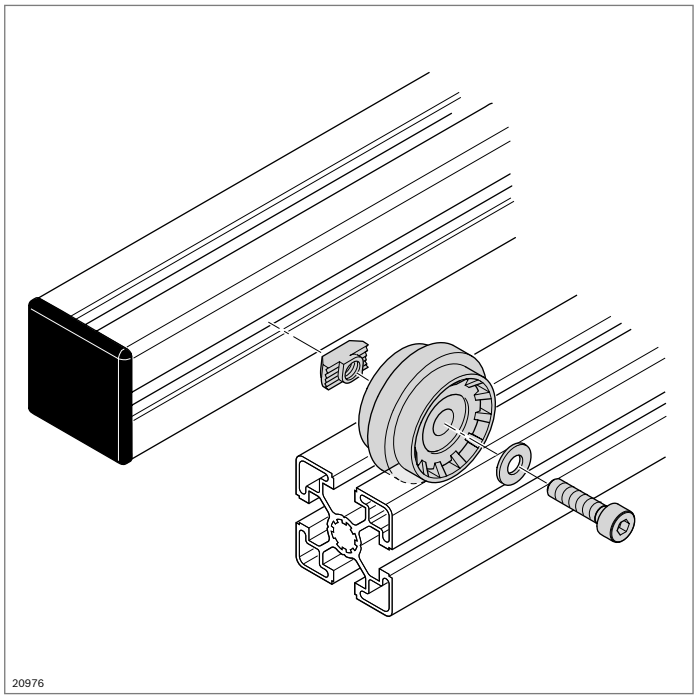

Support rollers

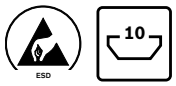

- Support roller for constructing trolleys or roller sections
- Mounted on profiles with 10 mm slot
- Good running characteristics thanks to deep-groove ball bearing with large diameter
- Support roller with rim can be guided in 10 mm slot
- ESD-conductive

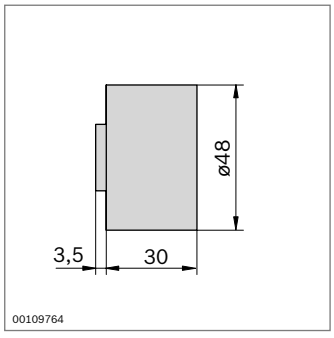

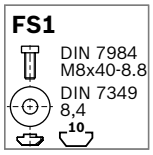

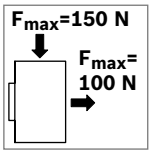

Support roller		No.	FS
	10	**3 842 218 942**	FS1

Material: Vestamid; black
Fastening material: steel, galvanized
Scope of delivery: Incl. fastening material (FS)

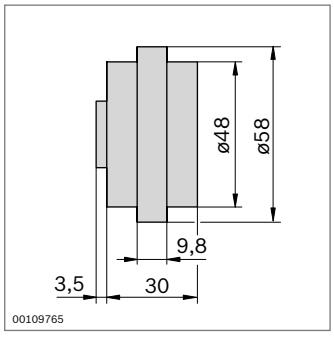

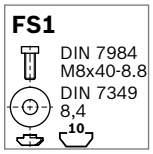

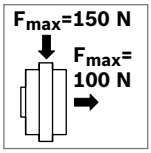

Support rollers with center rim		No.	FS
	10	**3 842 218 940**	FS1

Material: Vestamid; black
Fastening material: steel, galvanized
Scope of delivery: Incl. fastening material (FS)

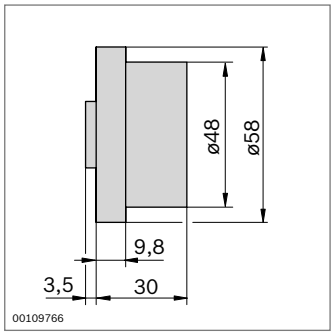

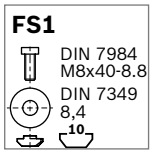

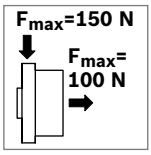

Support rollers with side rim		No.	FS
	10	**3 842 218 941**	FS1

Material: Vestamid; black
Fastening material: steel, galvanized
Scope of delivery: Incl. fastening material (FS)

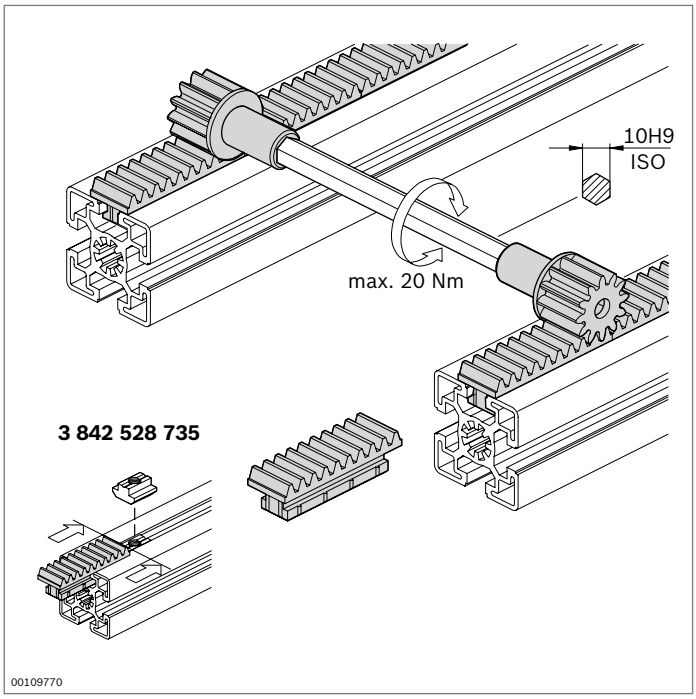

Rack
Pinion

10

- For constructing synchronous shafts to prevent tilting in the case of large guide widths

Accessories, required:

- standard commercially available hexagonal shaft 10H9
- sliding block for securing the rack in the slot (p. 3-7)

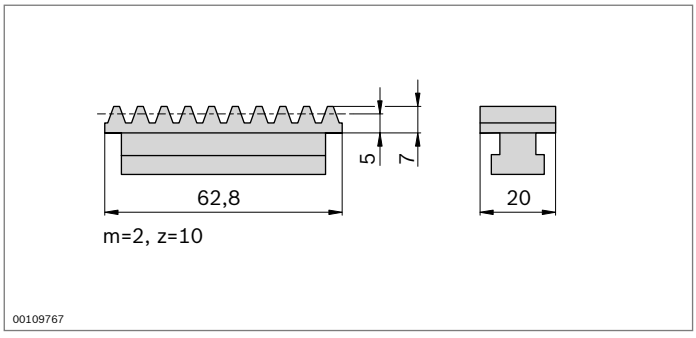

Rack		No.
	10	**3 842 501 578**
Material:	PA; black	

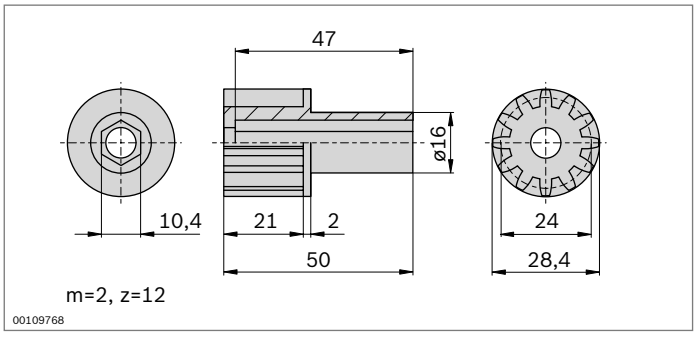

Pinion		No.
		3 842 501 576
Material:	POM, white	

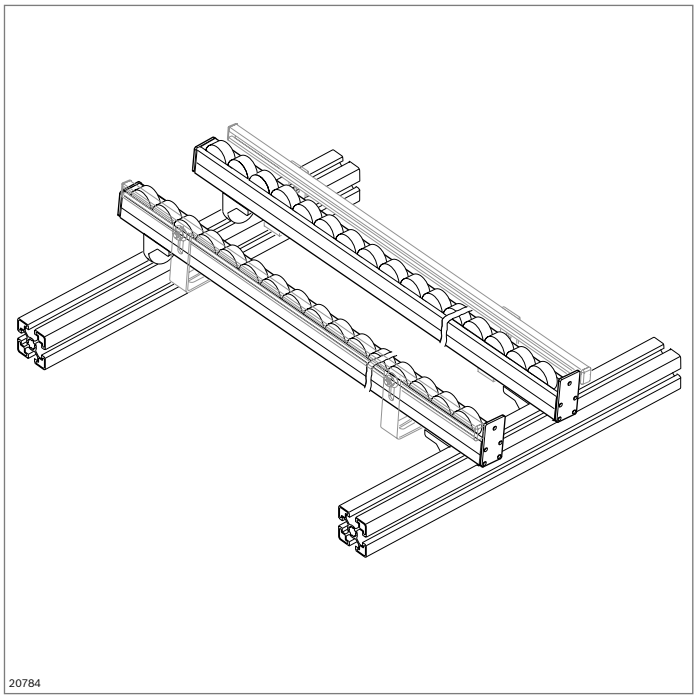

Elements for the construction of conveyor sections

- Assembly elements for constructing manual conveyor sections
- Various clip-in conveyor media, with and without lateral guide
- Standard slots as attachment interface
- EcoFlow for manual linking of workstations

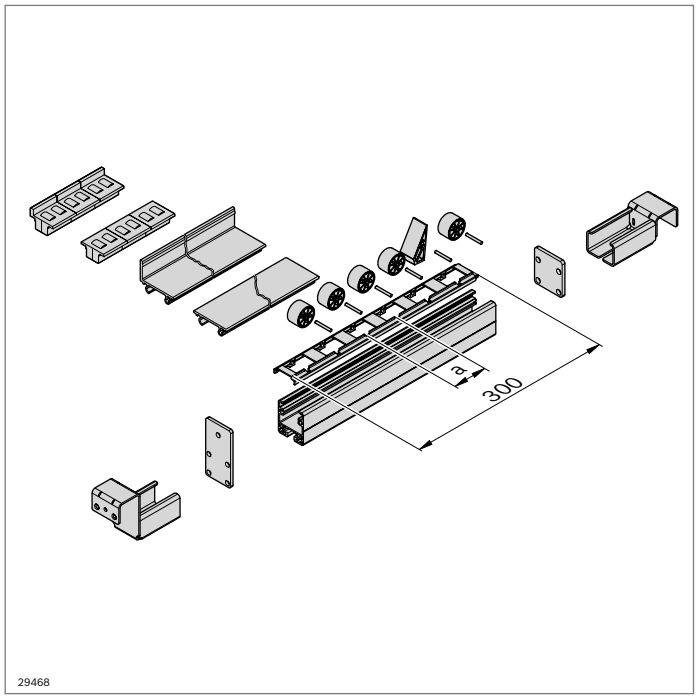

Conveyor track Lean

- Components for constructing manual conveyor sections
- Based on multi-functional U-profile
- Clip-in conveyor elements for all requirements:
  - rollers with or without flange; 4 colors to visually identify inventories (kanban) or to differentiate between good and reject parts
  - Slide rails with or without integrated lateral guide (GSSK, GS)
  - roller elements with and without flange (RE45SK, RE45)

Accessories:
Round tube D28 (p. 2-68)

U-profile

A = 4,4 cm²
I_x = 10,3 cm⁴
I_y = 8,3 cm⁴
W_x = 4,6 cm³
W_y = 4,1 cm³
m = 1,2 kg/m

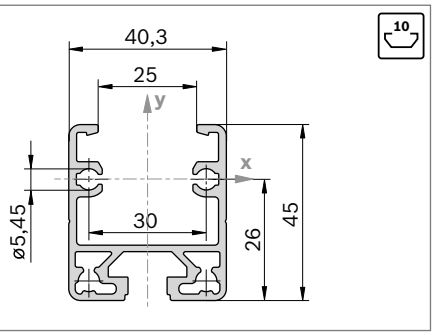

- U-profile with 10 mm slot

U-profile		L (mm)	ESD	No.
1 pc		30 ... 6000		**3 842 993 316 / L**
20 pcs		6070		**3 842 535 115**
1 pc		30 ... 6000		**3 842 995 027 / L**
20 pcs		6070		**3 842 541 814**

Material: U-profile: aluminum, anodized
U-profile ESD: aluminum, untreated

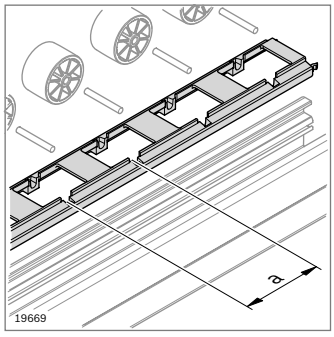

- Roller carrier for rollers D32 and D32SK (p. 12-14)

Roller carrier	a (mm)	ESD		No.
D32/37.5	37.5		20	**3 842 537 944**
			20	**3 842 537 945**
D32/50	50		20	**3 842 532 887**
			20	**3 842 538 094**
D 32SK/50	50		20	**3 842 532 886**
			20	**3 842 537 947**

Material: ABS

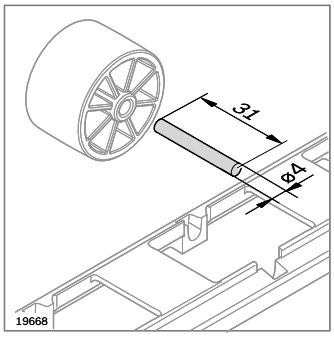

▶ Steel axis for rollers D32, D32SK

Steel axis		No.
	100	**3 842 532 862**

Material: Steel, stainless

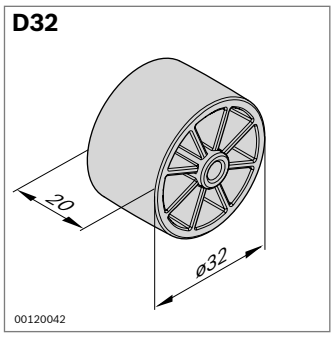

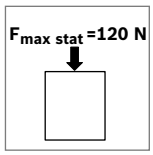

Roller		ESD		No.
D32	**black**		100	**3 842 532 865**
		⚠	100	**3 842 537 961**
	red		100	**3 842 532 866**
		⚠	100	**3 842 537 960**
	yellow		100	**3 842 532 870**
		⚠	100	**3 842 537 959**
	green		100	**3 842 532 752**
		⚠	100	**3 842 537 958**

Material: PE, colored / ESD made of PA, colored

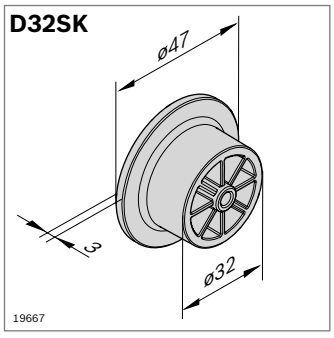

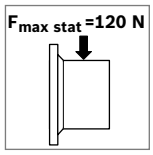

Roller		ESD		No.
D32SK	**black**		100	**3 842 532 867**
		⚠	100	**3 842 537 965**
	red		100	**3 842 532 883**
		⚠	100	**3 842 537 964**
	yellow		100	**3 842 532 884**
		⚠	100	**3 842 537 963**
	green		100	**3 842 532 880**
		⚠	100	**3 842 537 962**

Material: PE, colored / ESD made of PA, colored

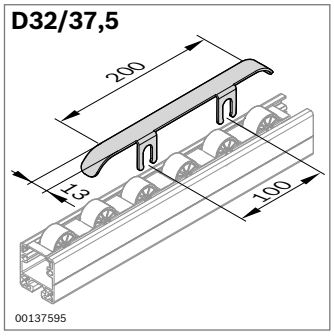

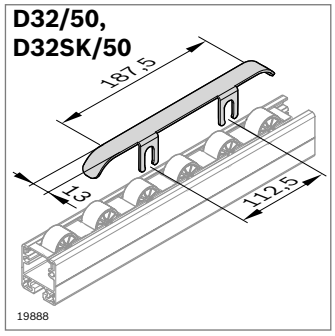

Brake	ESD		No.
D32/37.5	⚠	20	**3 842 537 948**
D32/50, D32SK/50	⚠	20	**3 842 532 881**

Material: Steel, galvanized

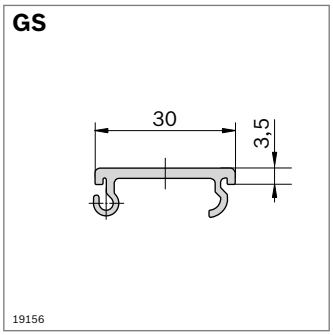

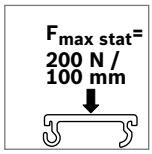

- Slide rail GS for constructing conveyor tracks with large gradients
- Slide rail for use with heavy containers

Slider rail	L (mm)	ESD		No.
GS	3000		20	**3 842 535 124**
	3000	⚠	20	**3 842 537 803**

Material: PVC, gray / ESD in black

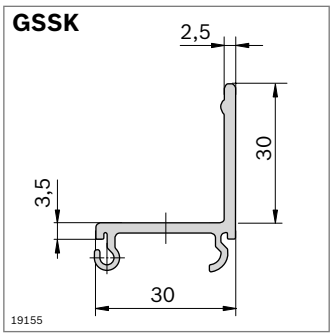

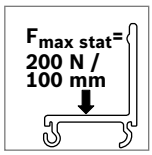

- Slide rail with lateral guide GSSK for constructing conveyor tracks with large gradients
- Slide rail for use with heavy containers

Slider rail	L (mm)	ESD		No.
GSSK	3000		20	**3 842 537 806**
	3000	⚠	20	**3 842 537 807**

Material: PVC, gray / ESD in black

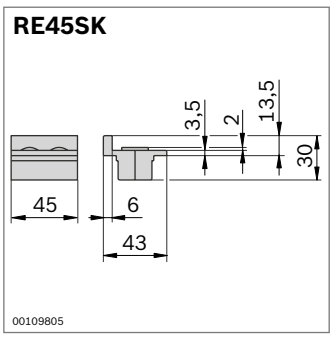

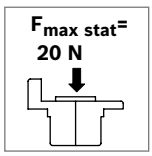

Roller element	ESD		No.
RE45SK		100	**3 842 319 500**
	⚠	100	**3 842 538 065**

Material: PA; black

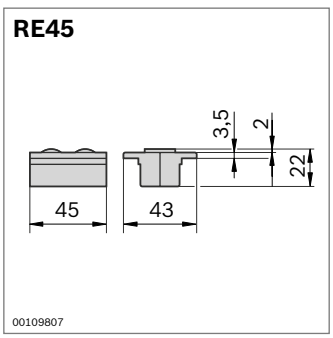

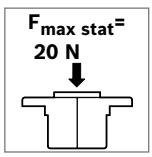

Roller element	ESD		No.
RE45		100	**3 842 319 501**
	⚠	100	**3 842 538 064**

Material: PA; black

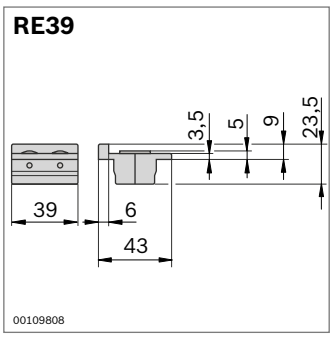

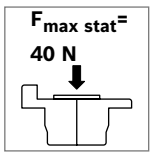

Roller element	ESD		No.
RE39		10	**3 842 520 000**
	⚠	10	**3 842 538 245**

Material: PA; black

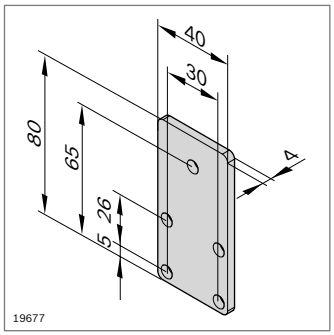

Closure plate with stop		No.	FS
40x80	20	**3 842 535 121**	4xFS1

Material: Steel, galvanized
Scope of delivery: Incl. fastening material (FS)

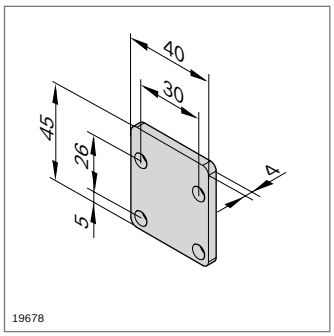

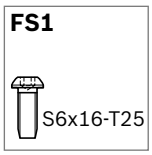

Closure plate without stop		No.	FS
40x45	20	**3 842 535 122**	4xFS1

Material: Steel, galvanized
Scope of delivery: Incl. fastening material (FS)

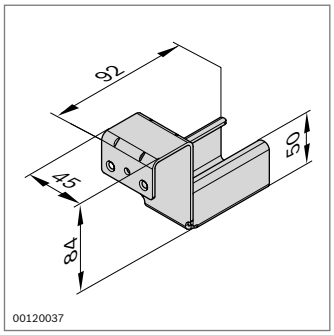

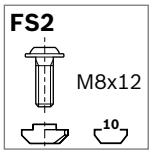

Rail holder with stop		No.	FS
	20	**3 842 537 660**	FS2

Material: Steel, galvanized
Scope of delivery: Incl. fastening material (FS)

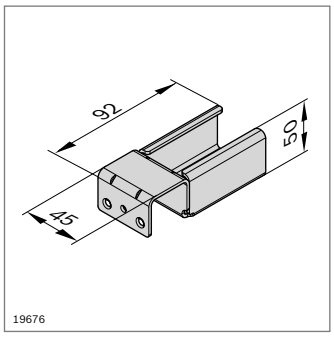

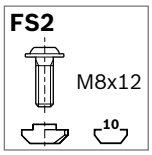

Rail holder without stop		No.	FS
	20	**3 842 537 661**	FS2

Material: Steel, galvanized
Scope of delivery: Incl. fastening material (FS)

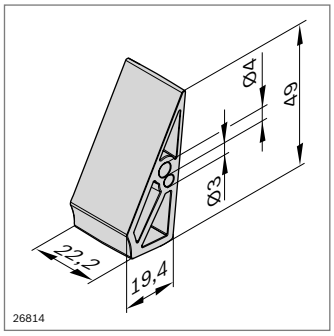

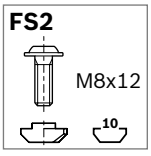

Stopper XLean/Lean	ESD		No.	FS
		10	**3 842 552 151**	FS2

Material: PP
Fastening material: steel, galvanized
Scope of delivery: Incl. fastening material (FS)

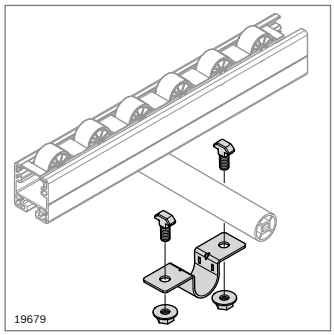

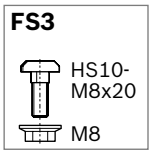

Tube clamp D28		No.	FS
	20	**3 842 535 364**	2xFS3

Material: Steel, galvanized
Scope of delivery: Incl. fastening material (FS)

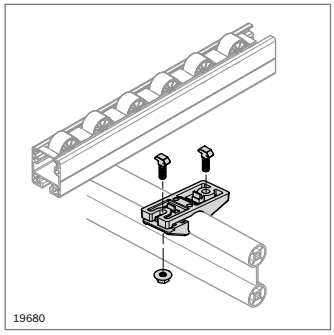

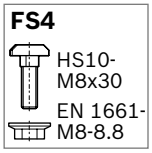

Holder for strut profile D28x55		No.	FS
	20	**3 842 537 720**	2xFS4

Material: Steel, galvanized
Scope of delivery: Incl. fastening material (FS)

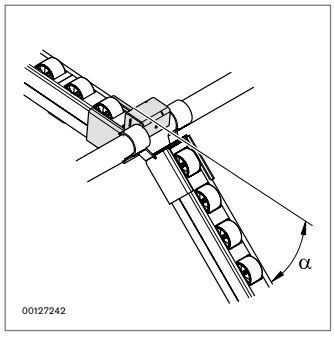

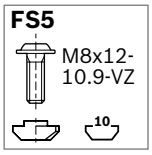

- Flexible bridge with maximum tilt (α_{max}) from horizontal:
  - with round tube D28 (p. 2-67): α_{max} = 40°
  - with strut profile D28x55 (p. 2-68): α_{max} = 30°

Flexible bridge		No.	FS
	20	**3 842 537 951**	FS5

Material: Steel, galvanized

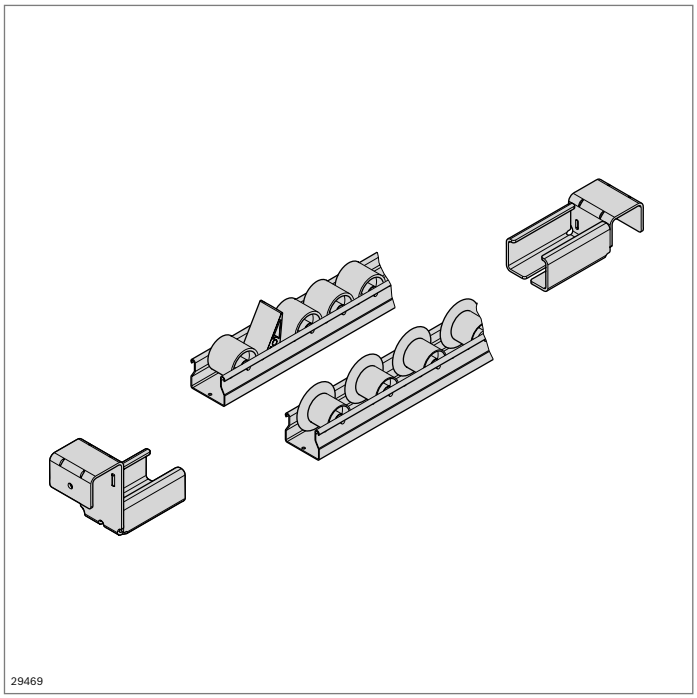

Conveyor track XLean

- Conveyor track made of steel profiles with plastic rollers and optional roller flange
- Available as ESD-conductive version.
- Self-supporting roller section
- Roller section with drill holes for fastening

Accessories:
Round tube D28 (p. 2-68)

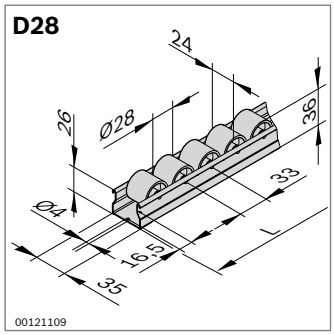

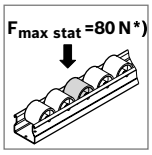

* per roller

Roller section	L (mm)	ESD		No.
D28	100 ... 4500		1	**3 842 993 321 / L**
	4500		50	**3 842 537 776**
	100 ... 4500	ESD	1	**3 842 993 431 / L**
	4500	ESD	50	**3 842 537 778**

Material: Rail: steel, galvanized
Roller: PP

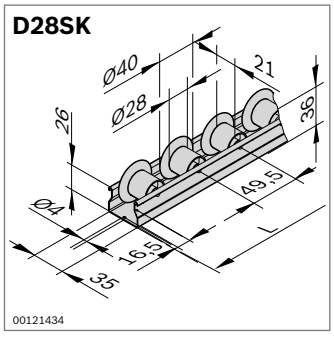

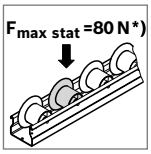

* per roller

Roller section	L (mm)	ESD		No.
D28SK	100 ... 4500		1	**3 842 993 322 / L**
	4500		50	**3 842 537 777**
	100 ... 4500	ESD	1	**3 842 993 432 / L**
	4500	ESD	50	**3 842 537 779**

Material: Rail: steel, galvanized
Roller: PP

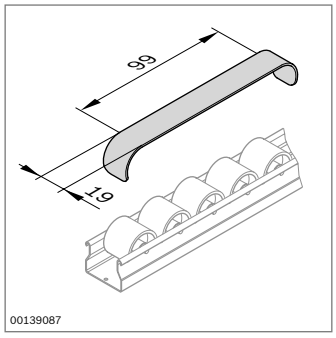

Brake		No.
	20	**3 842 532 871**

Material: Spring steel

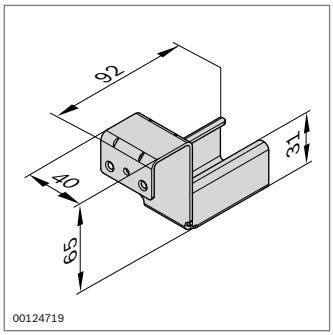

Rail holder with stop		No.
	20	**3 842 538 372**

Material: Steel, galvanized

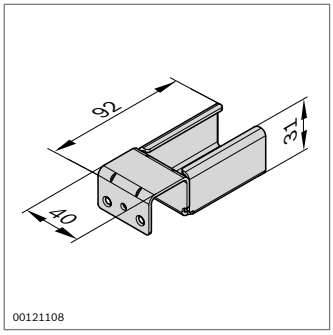

Rail holder without stop		No.
	20	**3 842 537 687**

Material: Steel, galvanized

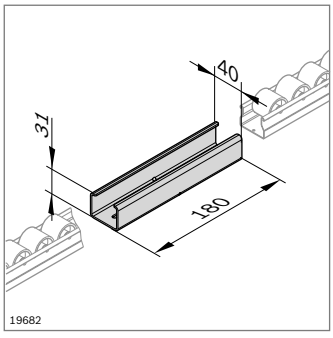

Section link		No.
	20	**3 842 536 722**

Material: Steel, galvanized

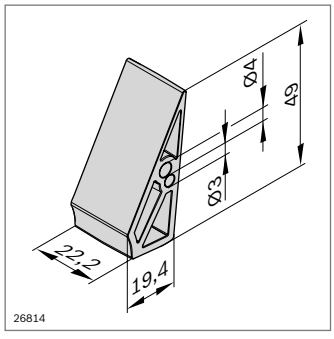

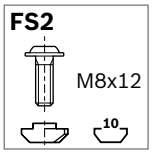

Stopper XLean/Lean	ESD		No.	FS
		10	**3 842 552 151**	FS2

Material: PP
Fastening material: steel, galvanized

Scope of delivery: Incl. fastening material (FS)

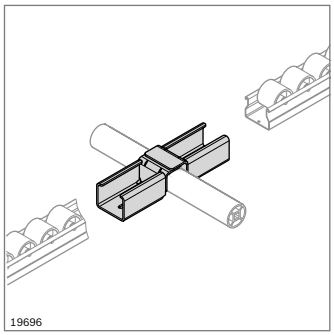

Bridge		**No.**
	20	**3 842 536 724**
Material:	Steel, galvanized	

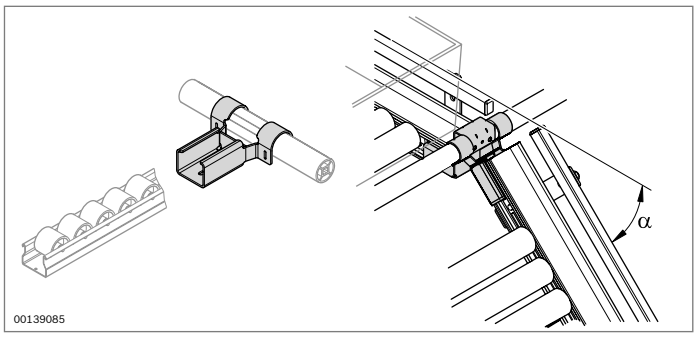

- Flexible bridge with maximum tilt (α_{max}) from horizontal:
  - with round tube D28 (p. 2-67): α_{max} = 40°
  - with strut profile D28x55 (p. 2-68): α_{max} = 30°

Flexible bridge		**No.**
	20	**3 842 537 911**
Material:	Steel, galvanized	

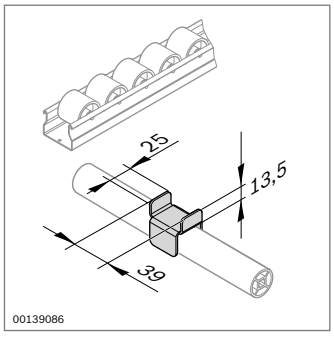

Mounting		**No.**
	20	**3 842 537 657**
Material:	Steel, galvanized	

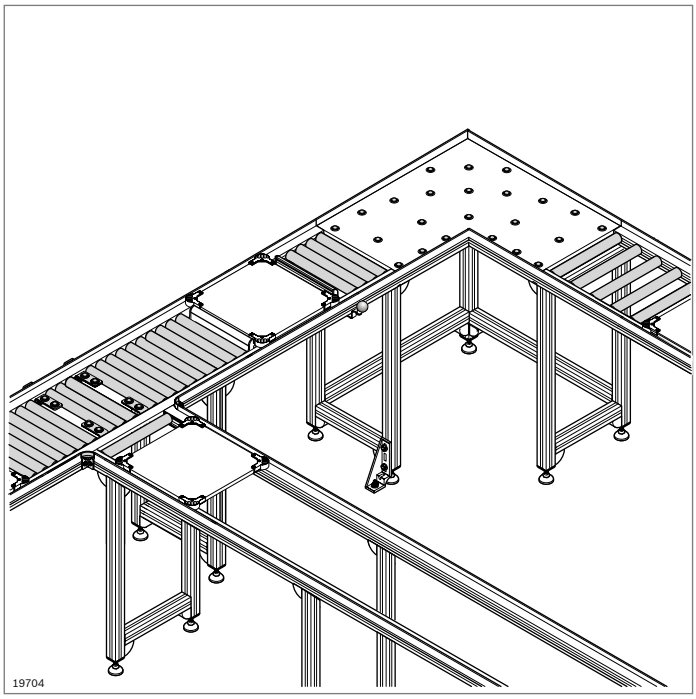

EcoFlow conveyor track

- Based on EcoFlow section profile
- For manual slide sections with rollers
- Clip-in guide profiles with lateral guide and clip-in conveyor rollers

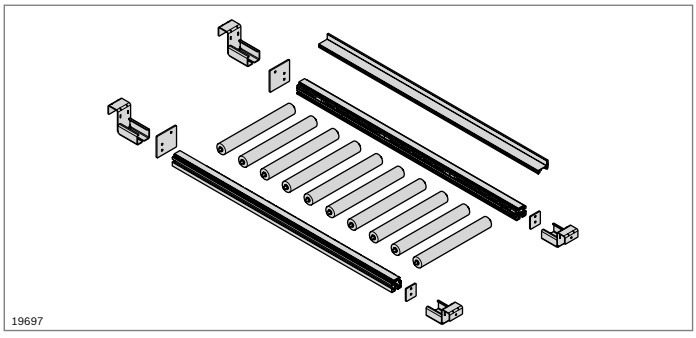

MV45x45

A = 6,2 cm²
I_x = 11,8 cm⁴
I_y = 10,5 cm⁴
W_x = 5,3 cm³
W_y = 4,7 cm³
m = 1,7 kg/m

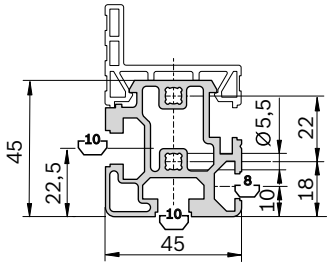

Section profile MV45x45		L (mm)	No.
1 pc		30 ... 6070	**3 842 993 029 / L**
20 pcs		6070	**3 842 537 321**

Material: Aluminum, anodized

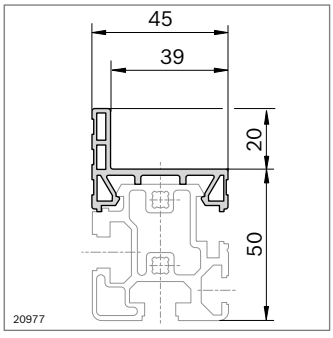

Guide profile MV45	L (mm)	ESD		No.
	30 ... 3000		1	**3 842 993 511 / L**
	3000		10	**3 842 525 443**
	30 ... 3000	ESD	1	**3 842 993 512 / L**
	3000	ESD	10	**3 842 526 034**

Material: PVC

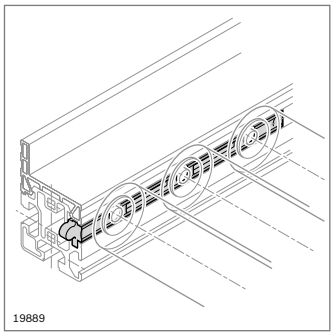

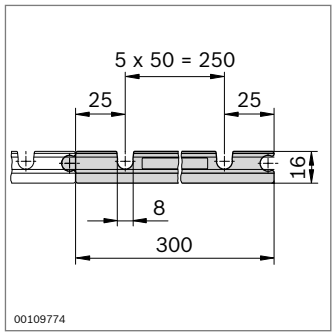

EcoFlow roller carrier	ESD		No.
		10	**3 842 535 683**

Material: ABS; black

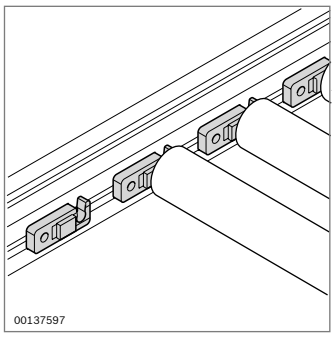

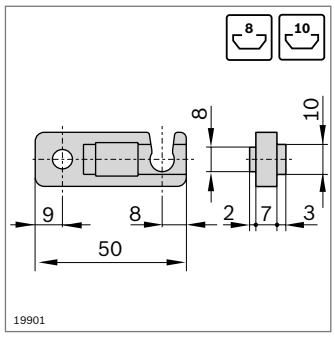

Roller mount	Slot		No.	FS
	8	10	**3 842 535 667**	FS1
	10	10	**3 842 535 668**	FS2

Material: Roller mount: PA6, black
Fastening material: steel, galvanized

Scope of delivery: Incl. fastening material (FS)

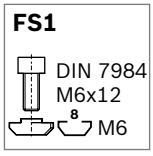

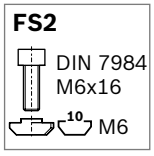

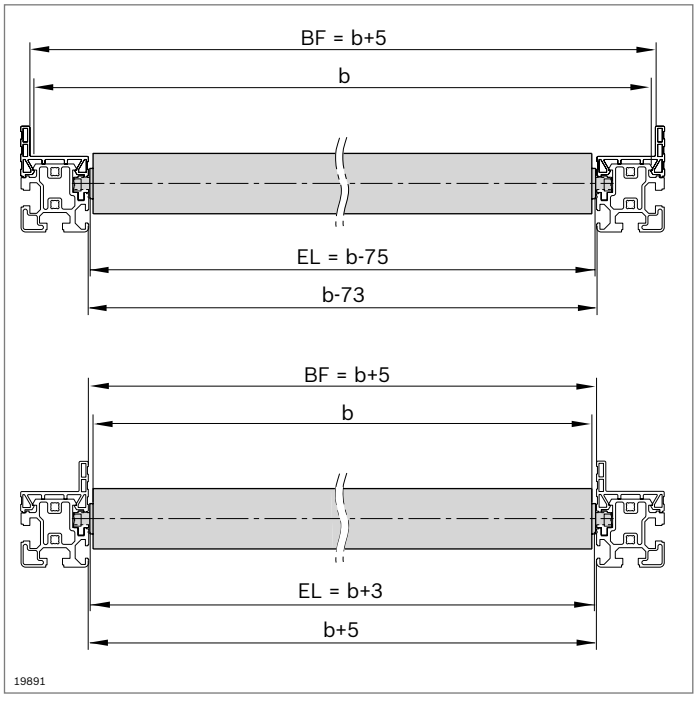

EcoFlow roller	F_{max} (N)	EL (mm)	ESD	No.
Plastic, gray	150	105 ... 605		**3 842 994 989 / L**
		225		**3 842 525 740**
		325		**3 842 525 741**
		425		**3 842 525 742**
		525		**3 842 537 164**
Steel, galvanized	500	105 ... 1005		**3 842 994 988 / L**
		225		**3 842 525 737**
		325		**3 842 525 738**
		425		**3 842 525 739**
		525		**3 842 537 163**
Stainless steel	150	105 ... 1005		**3 842 995 008 / L**

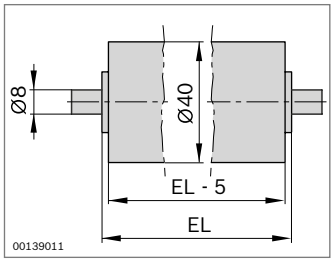

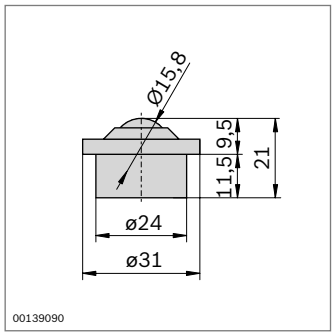

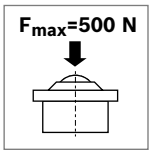

▶ Ball roller for smooth manual movement of goods with large-surfaces

Ball roller	ESD		No.
		20	**3 842 541 008**

Material: Housing: steel, galvanized
Ball: stainless steel

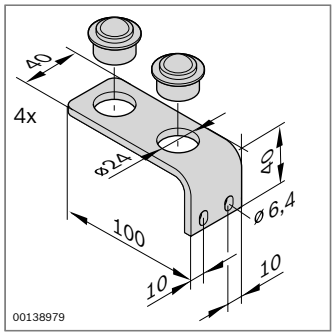

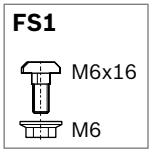

Transverse conveyor	ESD		No.	FS
		Set	**3 842 536 055**	8xFS1

Material: Bracket: steel, galvanized
Ball: stainless steel
Scope of delivery: Incl. 4 x bracket plate, fastening material (FS) for 10 mm slot

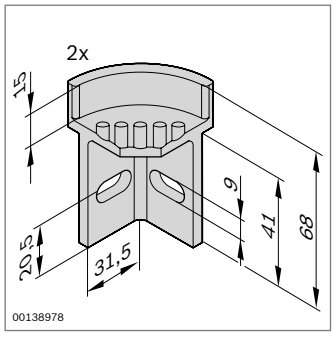

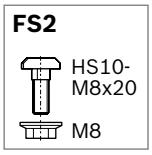

Corner piece	ESD		No.	FS
		Set	**3 842 536 056**	4xFS2

Material: PA; black, ESD-conductive
Scope of delivery: Incl. 2 x corner piece, fastening material (FS) for 10 mm slot

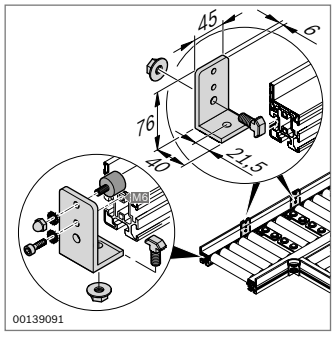

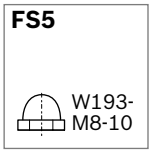

Stop		No.	FS
	Set	**3 842 536 057**	2xFS3, 4xFS4, 2xFS5 2xFS6

Material: Aluminum, anodized
Scope of delivery: Incl. 2 x stop, fastening material (FS)

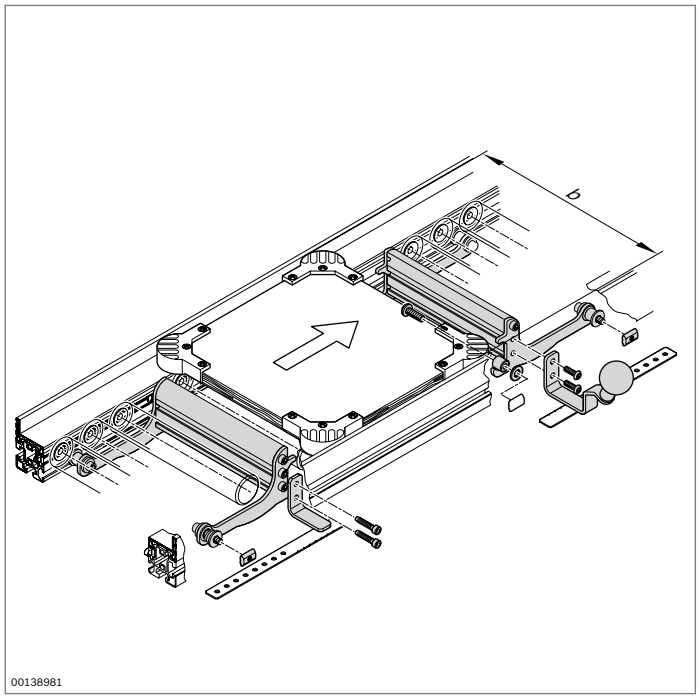

EcoFlow stop gates and return stops

- Stop gate and return stop for positioning workpiece pallets or containers
- At the planning stage remember to leave sufficient leg room. The stop gate and return stop extend downwards by an additional 45 mm
- We recommend using a workpiece pallet with corner pieces (p. 12-32) to provide a defined stopping mechanism

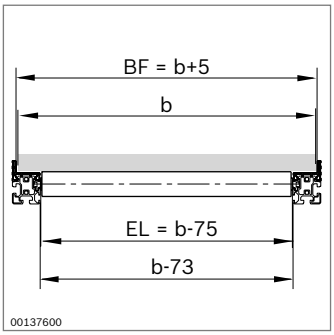

Stop gate	EL (mm)	No.
	105 ... 1005	**3 842 995 007 / EL**
	225	**3 842 537 894**
	325	**3 842 537 895**
	425	**3 842 537 896**
	525	**3 842 537 897**

Scope of delivery: Incl. fastening material

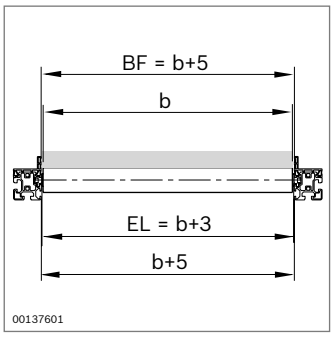

Return stop	EL (mm)	No.
	105 ... 1005	**3 842 995 017 / EL**
	225	**3 842 537 898**
	325	**3 842 537 899**
	425	**3 842 537 900**
	525	**3 842 537 901**

Scope of delivery: Incl. fastening material

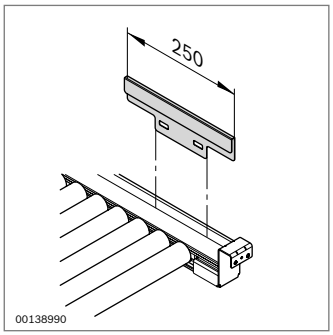

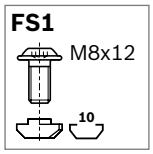

- Protective cover to protect the EcoFlow guide profile when loading the conveyor track

Protective cover		No.	FS
Outer slide rail	Set	**3 842 537 583**	4xFS1

Material: Steel, galvanized
Scope of delivery: Incl. 2x protective cover, fastening material (FS)

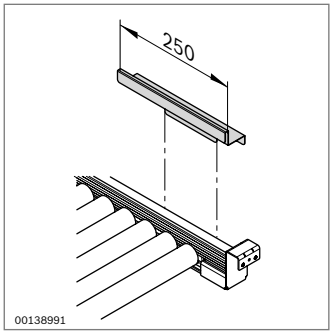

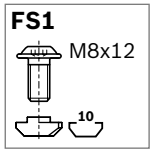

- Protective cover to protect the EcoFlow guide profile when loading the conveyor track

Protective cover		No.	FS
Inner slide rail	Set	**3 842 537 584**	4xFS1

Material: Steel, galvanized
Scope of delivery: Incl. 2 x protective cover, fastening material (FS)

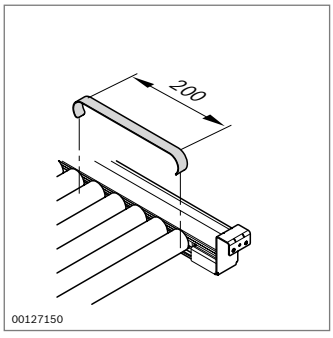

- Brake for bringing containers to a stop gently

Brake		No.
	20	**3 842 537 740**

Material: Steel, galvanized

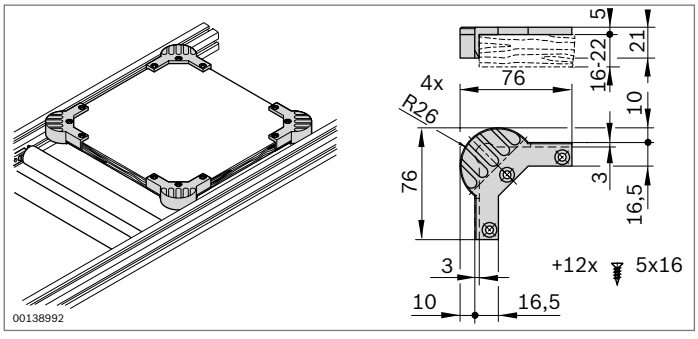

- Corner pieces for assembly of workpiece pallets
- For isolating parts from the pallet queue, well-defined guidance and stopping surfaces, good transition through curves and avoidance of edges where trapping may occur

Corner pieces for workpiece pallets	ESD		No.
		Set	**3 842 536 054**

Material: PA

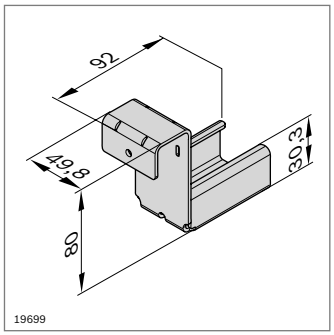

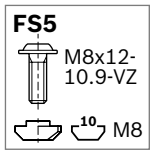

Rail holder with stop		No.	FS
	20	**3 842 537 664**	FS5

Material: Steel, galvanized
Accessories: Round tube D28 (p. 2-67)
Scope of delivery: Incl. fastening material (FS)

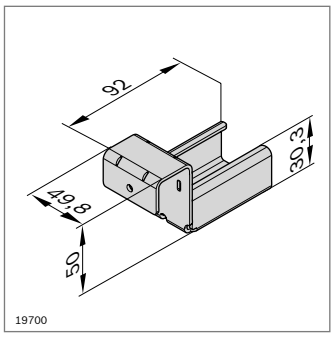

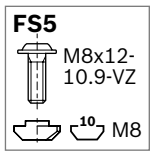

Rail holder without stop		No.	FS
	20	**3 842 537 665**	FS5

Material: Steel, galvanized
Accessories: Round tube D28 (p. 2-67)
Scope of delivery: Incl. fastening material (FS)

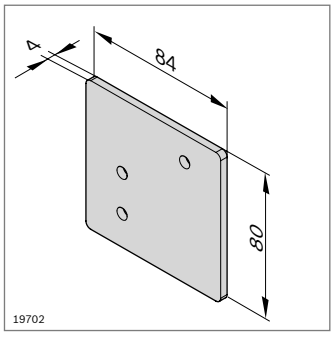

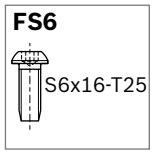

Closure plate with stop		No.	FS
	20	**3 842 537 593**	2xFS6

Material: Steel, galvanized
Scope of delivery: Incl. fastening material (FS)

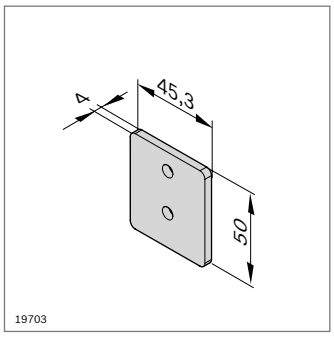

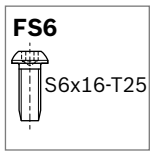

Closure plate without stop		No.	FS
	20	**3 842 537 592**	2xFS6

Material: Steel, galvanized
Scope of delivery: Incl. fastening material (FS)

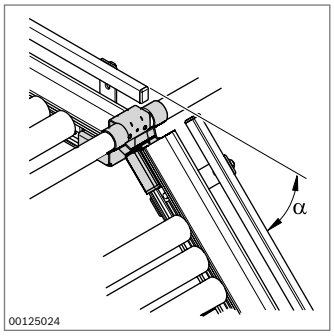

- Flexible bridge with maximum tilt (α_{max}) from horizontal:
  - with round tube D28 (p. 2-67): α_{max} = 40°
  - with strut profile D28x55 (p. 2-68): α_{max} = 30°

Flexible bridge		No.
	20	**3 842 537 911**

Material: Steel, galvanized

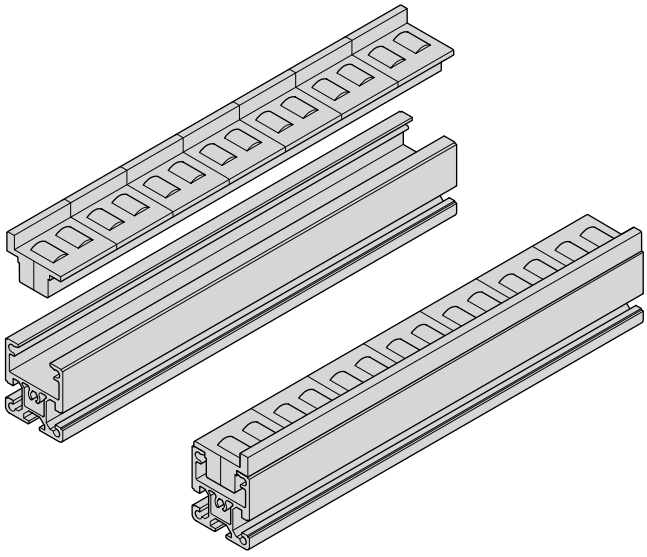

19898

Conveyor track made of section profiles and roller elements

- Economical solution for manual slide sections
- Roller elements can be clipped in

Accessories:
Roller elements (p. 12-22)

SP 2/R

A = 5,23 cm²
I_x = 4,39 cm⁴
I_y = 11,77 cm⁴
W_x = 2,47 cm³
W_y = 5,23 cm³
m = 1,41 kg/m

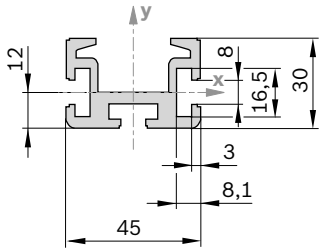

19893

Section profile SP 2/R	L (mm)	No.
	50 ... 6000	**3 842 992 676 / L**

Material: Aluminum, natural-colored, anodized

SP 2/B

A = 10,4 cm²
I_x = 49,6 cm⁴
I_y = 25,8 cm⁴
W_x = 12,1 cm³
W_y = 11,5 cm³
m = 2,8 kg/m

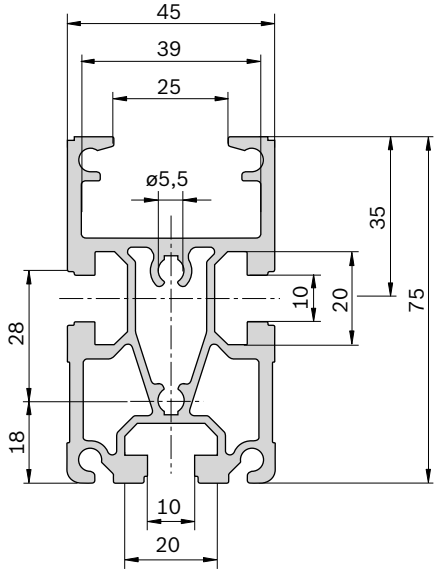

19604

Section profile SP 2/B	Slot	L (mm)	No.
1 pc	10	200...6000	**3 842 992 884 / L**
16 pcs	10	6070	**3 842 532 695**

Material: Aluminum, natural-colored, anodized
Accessories: Cross connector QV 2 (p. 12-35)

SP 2/B-50

A = 6,9 cm²
I_x = 46,2 cm⁴
I_y = 16,9 cm⁴
W_x = 5,3 cm³
W_y = 7,5 cm³
m = 1,9 kg/m

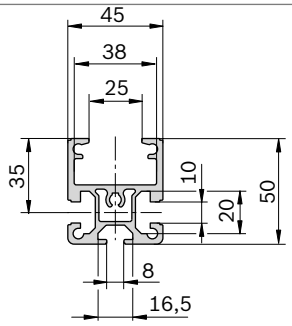

19605

Section profile SP 2/B-50		Slot	L (mm)	No.
1 pc		8 / 10	200 ... 6000	**3 842 992 903 / L**
20 pcs		8 / 10	6070	**3 842 532 697**

Material: Aluminum, natural-colored, anodized

SP 2/B-100

A = 11,9 cm²
I_x = 95,1 cm⁴
I_y = 30,4 cm⁴
W_x = 20,0 cm³
W_y = 13,5 cm³
m = 3,2 kg/m

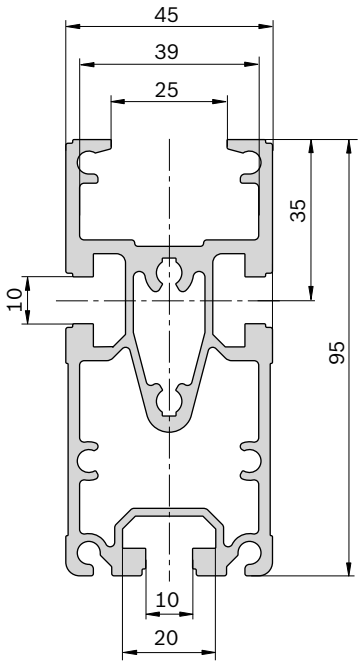

19606

Section profile SP 2/B-100		Slot	L (mm)	No.
1 pc			200 ... 6000	**3 842 993 259 / L**
16 pcs		10	6070	**3 842 532 608**

Material: Aluminum, natural-colored, anodized
Accessories: Cross connector QV 2 (p. 12-35)

SP 2/BH

A = 12,4 cm²
I_x = 53,7 cm⁴
I_y = 28,6 cm⁴
W_x = 14,0 cm³
W_y = 13,8 cm³
m = 3,3 kg/m

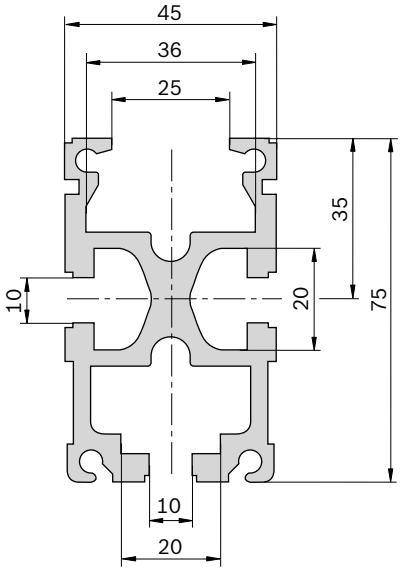

19607

Section profile SP 2/BH		Slot	L (mm)	No.
1 pc		10	200 ... 6000	**3 842 990 409 / L**
16 pcs		10	6070	**3 842 532 696**

Material: Aluminum, natural-colored, anodized
Accessories: Cross connector QV 2 (p. 12-35)

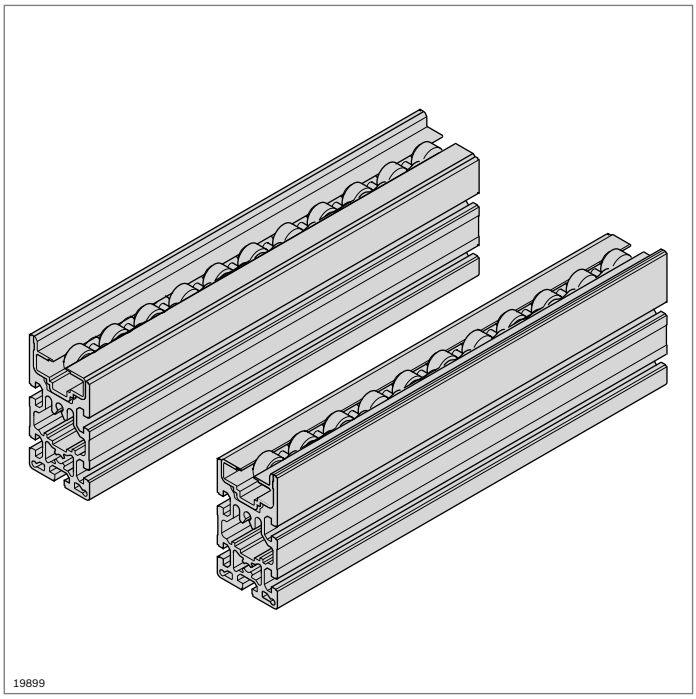

Conveyor sections made of SP 4/R section profiles and accumulation roller chains

- For constructing manual slide sections with high bearing loads (up to 2.0 kg/cm)
- For applications with and without workpiece pallets
- Low friction
- Steel chain with support rollers made of PA 12

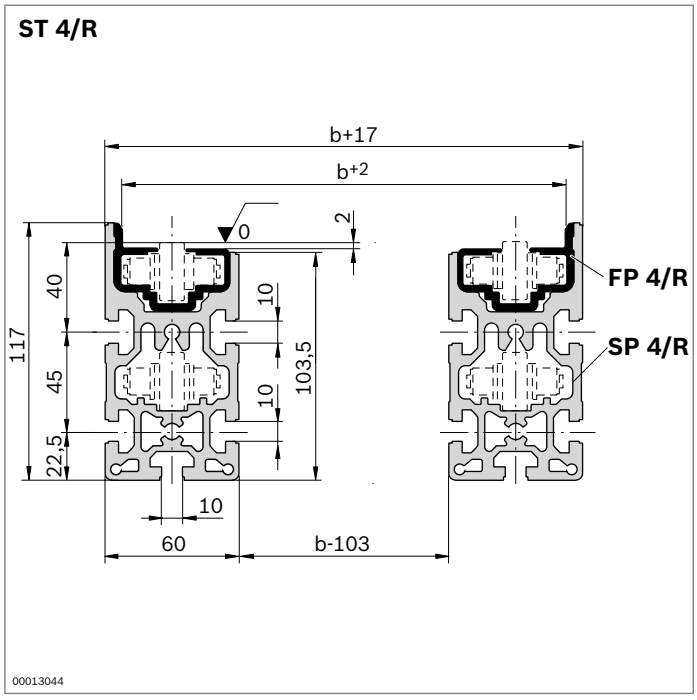

Section ST 4/R	L (mm)	No.
	200 ... 6000	**3 842 994 839 / L**

Material:	Aluminum, natural-colored, anodized Guide profile: PA 12
Scope of delivery:	2 x section profile SP 4/R 2 x guide profile FP 4/R
Condition on delivery:	Assembled
Accessories:	Accumulation roller chain (p. 12-31) Cross connector QV 4 (p. 12-31)

SP 4/R

A = 26,13 cm²
I_x = 222,0 cm⁴
I_y = 95,5 cm⁴
W_x = 84,86 cm³
W_y = 16,41 cm³
m = 3,5 kg/m

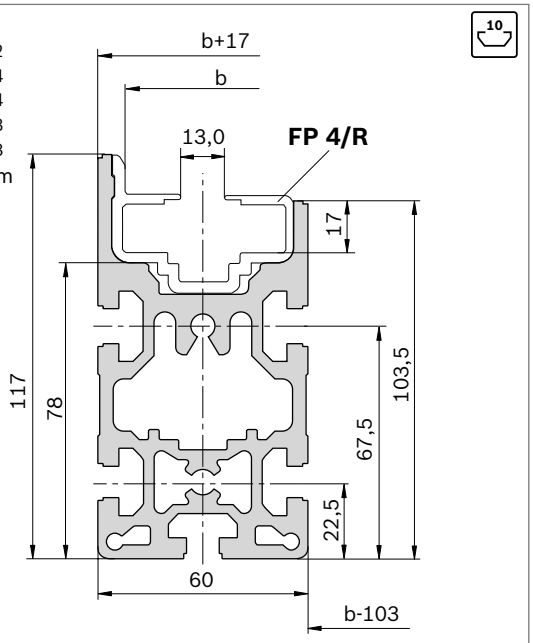

Section profile SP 4/R		L (mm)	No.
10 pcs		6000	**3 842 532 505**

Material: Aluminum, natural-colored, anodized
Accessories: Guide profile FP 4/R
Accumulation roller chain (p. 12-31)
Cross connector QV 4 (p. 12-31)

FP 4/R

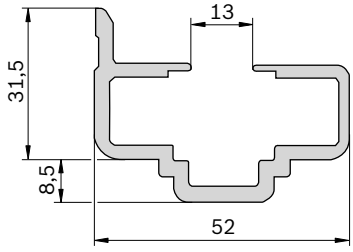

Guide profile FP 4/R		L (mm)	No.
10 pcs		6000	**3 842 532 508**

Material: PA 12 (anti-static)

12

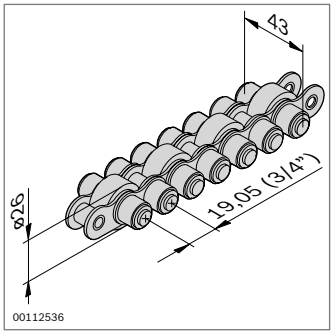

Accumulation roller chain	**L** (mm)	**No.**
Support roller: PA 12	5000	**3 842 508 967**

Material: Accumulation roller chain: steel
Support roller: see ordering table
Scope of delivery: Incl. chain coupling
Accessories: Additional chain coupling (**3 842 071 941**)

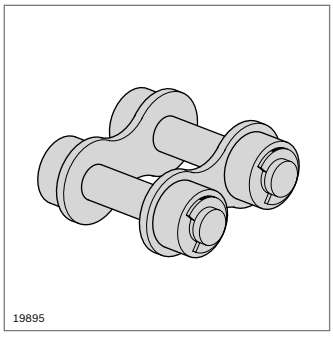

- Chain coupling for extending accumulation roller chains

Chain coupling	**No.**
	3 842 071 941

Material: Steel

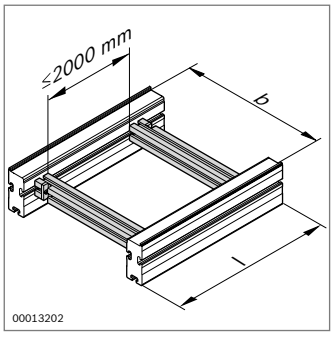

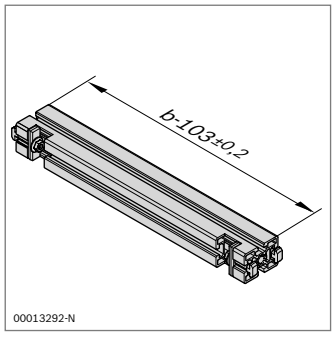

- Cross connector QV 4 for connecting two section profiles
- For defining the track width

Cross connector QV 4	**b** (mm)	**No.**
	443 ... 1243	**3 842 994 832 / b**

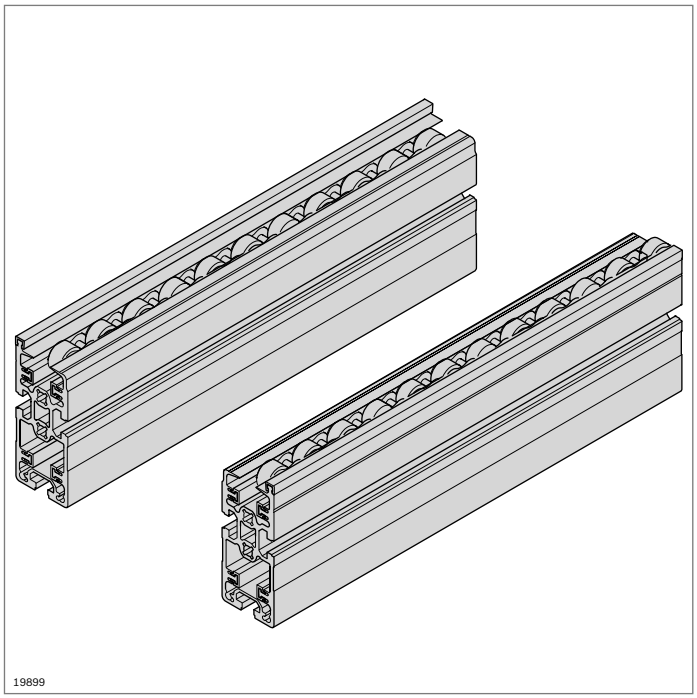

Conveyor sections made of SP 2 section profiles and accumulation roller chains

- For constructing manual slide sections with high bearing loads (up to 2.0 kg/cm)
- For applications with and without workpiece pallets
- Accumulation roller chain with and without small parts trap

ST 2/R-100

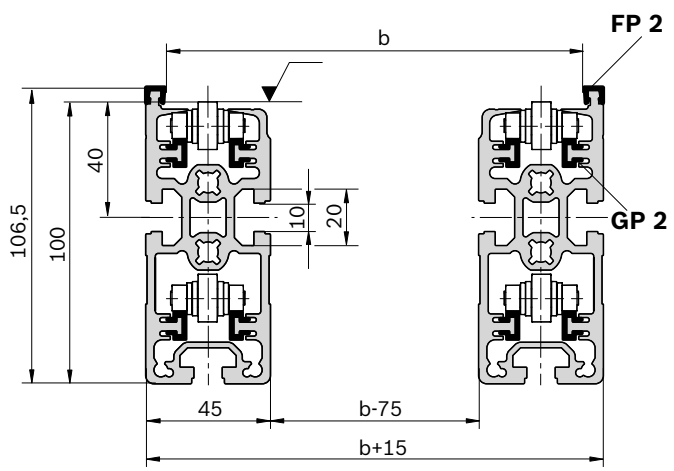

- Customizable section with plastic guide profile

Section ST 2/R-100	ESD	L (mm)	No.
		60 ... 6000	**3 842 994 889 /L**

Material:	Aluminum, natural-colored, anodized Slide profile, guide profile: PA 12
Scope of delivery:	2x section profile SP 2/R-100 2x guide profile FP 2 8x slide profile GP 2
Condition on delivery:	Assembled
Accessories:	Accumulation roller chain (p. 12-35) Accumulation roller chain with small parts trap (p. 12-35) Cross connector QV 2, QV 2-H (S. 12-35)

ST 2/R-100-ST

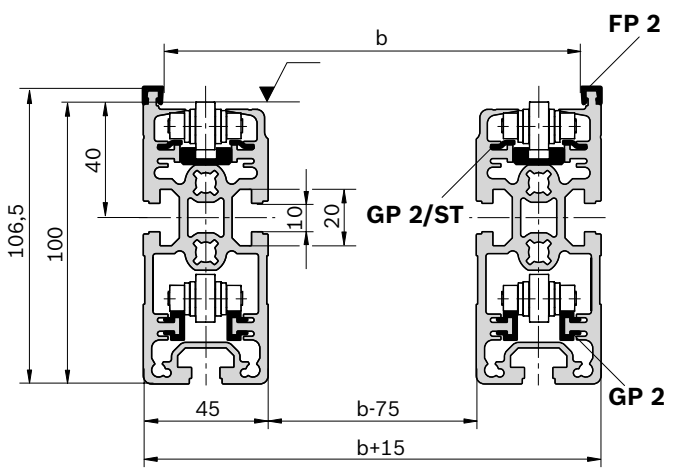

20801

Section ST 2/R-100 ST	ESD	L (mm)	No.
		60 ... 6000	**3 842 994 907 / L**

Material:	Aluminum, natural-colored, anodized Slide profile: steel Guide profile: PA 12 Guide profile for accumulation roller chain: PE
Scope of delivery:	2 x section profile SP 2/R-100 2 x guide profile FP 2 4 x slide profile GP 2 4 x slide profile GP 2/ST 2 x guide profile for accumulation roller chain
Condition on delivery:	Assembled
Accessories:	Accumulation roller chain (p. 12-35) Accumulation roller chain with small parts trap (p. 12-35) Cross connector QV 2, QV 2-H (S. 12-35)

SP 2/R-100

A = 16,4 cm²
I_x = 144,0 cm⁴
I_y = 40,1 cm⁴
W_x = 27,7 cm³
W_y = 17,8 cm³
m = 4,4 kg/m

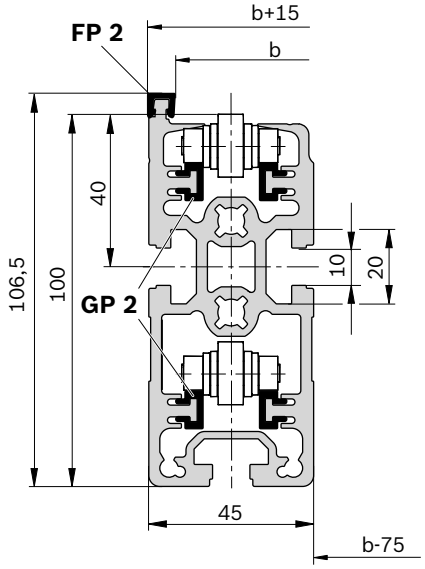

19706

Section profile SP 2/R-100		L (mm)	No.
16 pcs		6070	**3 842 529 931**

Material:	Aluminum, natural-colored, anodized
Accessories:	Guide and slide profile PA (p. 12-34) Guide and slide profile ST (p. 12-34)

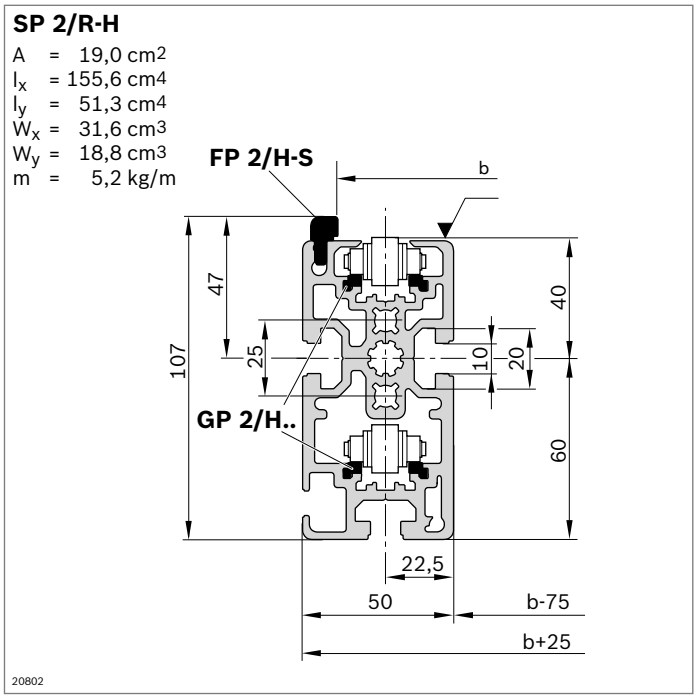

Section profile SP 2/R-H		L (mm)	No.
12 pcs		6070	**3 842 536 792**

Material: Aluminum, natural-colored, anodized
Accessories: Guide profile FP 2/H-ST
Slide profile GP 2/H-KST
Slide profile GP 2/H-ST

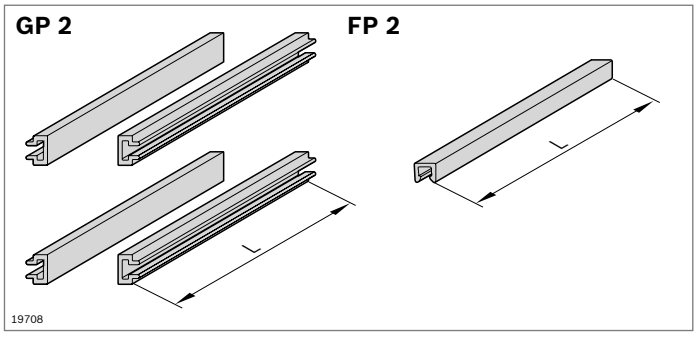

Guide and slide profile PA	ESD	No.
		3 842 529 933

Material: PA 12 (anti-static)
Scope of delivery: 64 x slide profile GP 2 (L = 6000 mm)
16 x guide profile FP 2 (L = 6000 mm)

Guide and slide profile ST	ESD	No.
		3 842 532 676

Material: GP 2/ST: steel, corrosion-resistant
Guide profile for accumulation roller chain: PE
Scope of delivery: 32 x slide profile GP 2/ST (L = 3000 mm)
24 x guide profile for accumulation roller chain (L = 2000 mm)

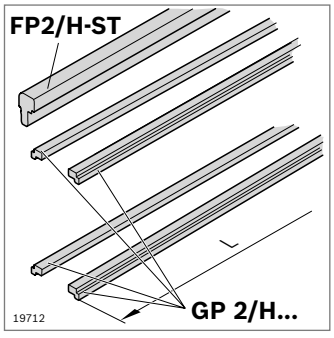

Guide profile			L (mm)	ESD	No.
FP 2/H-ST	24 pcs		3000		**3 842 537 890**

Material: Steel, corrosion-resistant

Slide profiles			L (mm)	ESD	No.
GP 2/H-ST	48 pcs		3000		**3 842 537 888**
GP 2/H-KST	48 pcs		3000		**3 842 537 889**

Material: H-KST: PA (anti-static)
H-ST: steel, corrosion-resistant

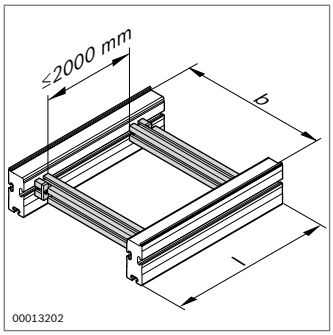

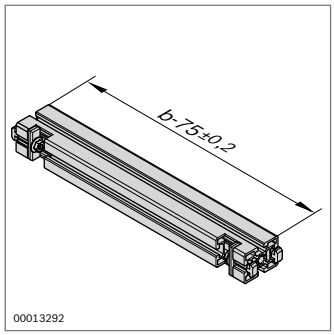

- Cross connector QV 2 for connecting two section profiles
- For defining the track width

Cross connector QV 2	**b** (mm)	**No.**
	160...1040	**3 842 994 635 / b**

Material: Aluminum, natural-colored, anodized
Fastening material: steel
Scope of delivery: Strut profile 45x60, 2 x cross connector (p. 3-56)

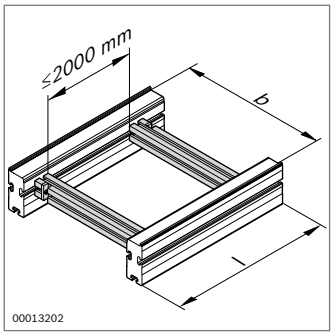

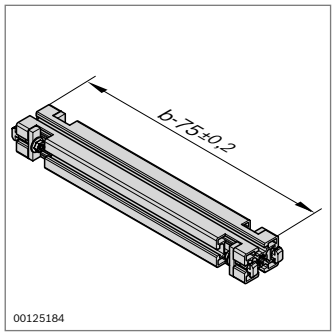

- Cross connector QV 2-H for connecting two section profiles
- For heavy applications
- For defining the track width

Cross connector QV 2-H	**b** (mm)	**No.**
	160...1040	**3 842 993 052 / b**

Material: Aluminum, natural-colored, anodized
Fastening material: steel
Scope of delivery: Strut profile 45x60, 4 x cross connector (p. 3-56)

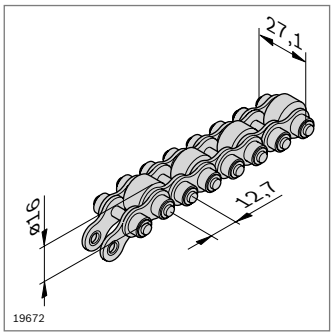

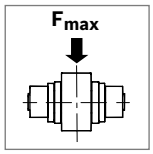

Accumulation roller chain	F_{max} (kg/cm)	**L** (mm)	**No.**
Support roller: PA 12	1.5	12000	**3 842 523 918**
Support roller: steel	2.0[1)]/1.5[2)]	12000	**3 842 530 864**

1) When using slide profile GP 2/ST
2) When using slide profile GP 2

Material: Accumulation roller chain: steel
Support roller: see ordering table
Scope of delivery: Incl. chain coupling
Accessories: Additional chain coupling (**3 842 530 417**)

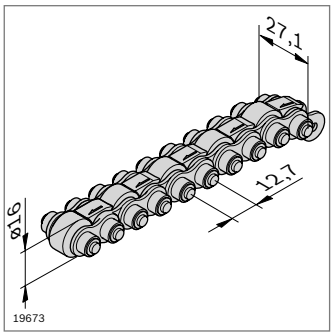

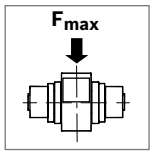

Accumulation roller chain with small parts trap	F_{max} (kg/cm)	**L** (mm)	**No.**
Support roller: PA 12	1.5	12000	**3 842 536 268**
Support roller: steel	2.0[1)]/1.5[2)]	12000	**3 842 536 270**

1) When using slide profile GP 2/ST
2) When using slide profile GP 2

Material: Accumulation roller chain: steel
Support roller: see ordering table
Scope of delivery: Incl. chain coupling
Accessories: Additional chain coupling (**3 842 530 417**)

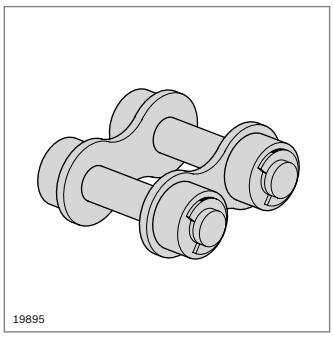

- Chain coupling for extending accumulation roller chains

Chain coupling	**No.**
	3 842 530 417

Material: steel

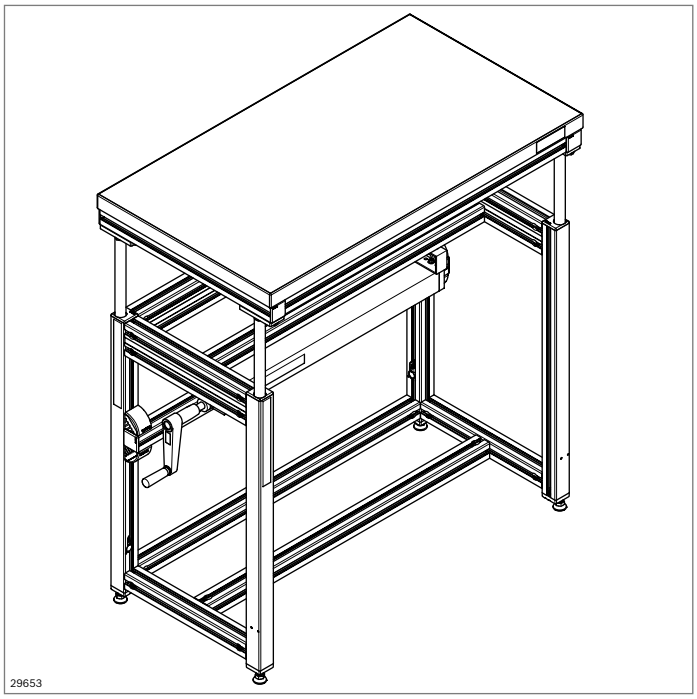

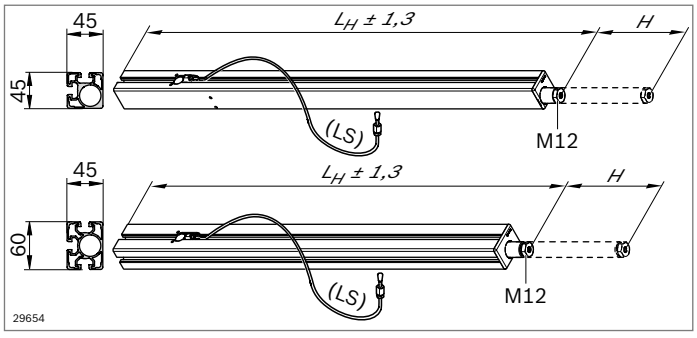

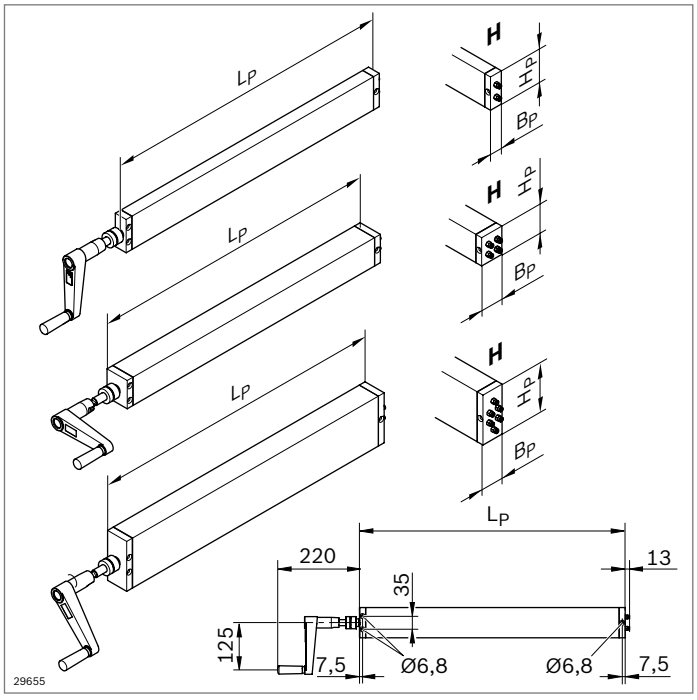

Components for height adjustment 45x45 and 45x60

- Infinitely variable hydraulic height adjustment with a crank handle, e.g. for work benches, tables or frames
- Max. load bearing capacity per lifting module 800 N
- Maximum lift 400 mm
- Simplest mounting system due to use of hydraulic hoses with quick-release couplings
- Variable or fixed lengths for lifting module and hoses
- For compliance with the safety requirements for lifting tables according to DIN EN 1570-1.

Accessories, optional:
- connection elements, e.g. bracket (see p. 3-17),
- leveling foot, e.g. 3 842 529 025 (see p. 6-4)

Lifting module		L_H (mm)	L_S (mm)		No.
45x45	Variable	720 ... 2000[1)]	1000 ... 4000[2)]	Set	**3 842 994 000/L_H/L_S**
	Standard	770	2500	Set	**3 842 552 131/L_H/L_S**
45x60	Variable	720 ... 2000[1)]	1000 ... 4000[2)]	Set	**3 842 994 001/L_H/L_S**
	Standard	770	2500	Set	**3 842 552 132/L_H/L_S**

[1)] Lifting module length (L_H) can be ordered in 10 mm increments
[2)] Hose length (L_S) can be ordered in 1000, 1500, 2000, 2500, 3000, 4000 mm

Scope of delivery: 2 x lifting module with built-in hydraulic cylinder incl. hose (min. bend radius 50 mm) and quick-release coupling; 2 x cover cap
Condition on delivery: Assembled, filled with food-safe HPL oil of class NSF H1

Pump and drive

- Synchronous activation of 2, 4 or 6 lifting modules
- Can be mounted in any position
- Incl. friction clutch for load control
- 4 mm lift per rotation
- Crank handle, retractable

Pump	Max. Load (N)	Quantity Lift module	L_P (mm)	W_P (mm)	H_P (mm)	No.
	1600	2	702.5±2	30	80	**3 842 552 133**
	3200	4	702.5±2	56	68	**3 842 552 134**
	3200	6	714.5±2	60	120	**3 842 552 135**

Scope of delivery: Pump incl. hand crank and quick-release coupling
Condition on delivery: Assembled, filled with food-safe HPL oil of class NSF H1

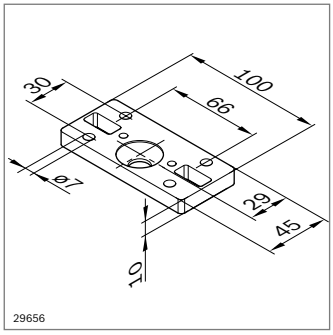

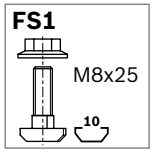

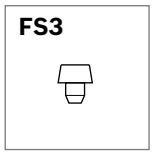

Connecting plate

- For mounting the lift module on a foot, profile or table top

Connecting plate		No.	FS
	Set	**3 842 552 176**	4xFS1, 2xFS2, 4xFS3

Material: Aluminum
Fastening material: steel, galvanized
Scope of delivery: 2 x connecting plate; Incl. fastening material (FS)

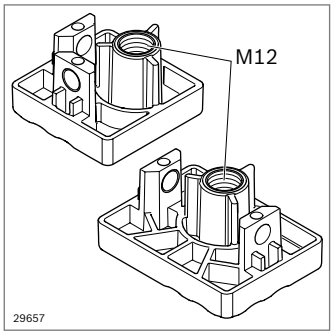

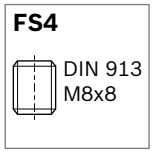

Adapter plate

- For connecting a leveling foot (e.g. 3 842 529 025) to the lifting module

Adapter plate		No.	FS
45x45	Set	**3 842 552 174**	4xFS4
45x60	Set	**3 842 552 175**	4xFS4

Material: Diecast zinc
Fastening material: steel; galvanized,
Scope of delivery: 2 x adapter plate; incl. fastening material (FS)

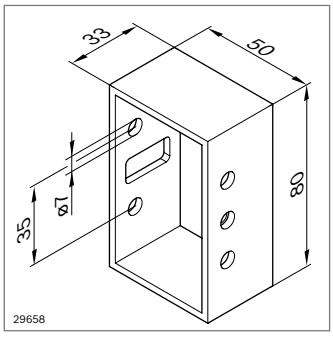

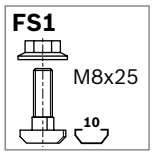

Connection adapter

- For mounting the pump on a profile or a table top
- Depending on the pump size, connection requires 3 countersunk screws (ISO 10642, M6, 8.8) which are either 40 mm long (pump for 2 lifting modules) or 70 mm long
  (pump for 4 or 6 lifting modules)

Connection adapter		No.	FS
	Set	**3 842 552 177**	2xFS1

Material: Aluminum
Fastening material: steel, galvanized
Scope of delivery: 2 x connection adapter; Incl. fastening material (FS)

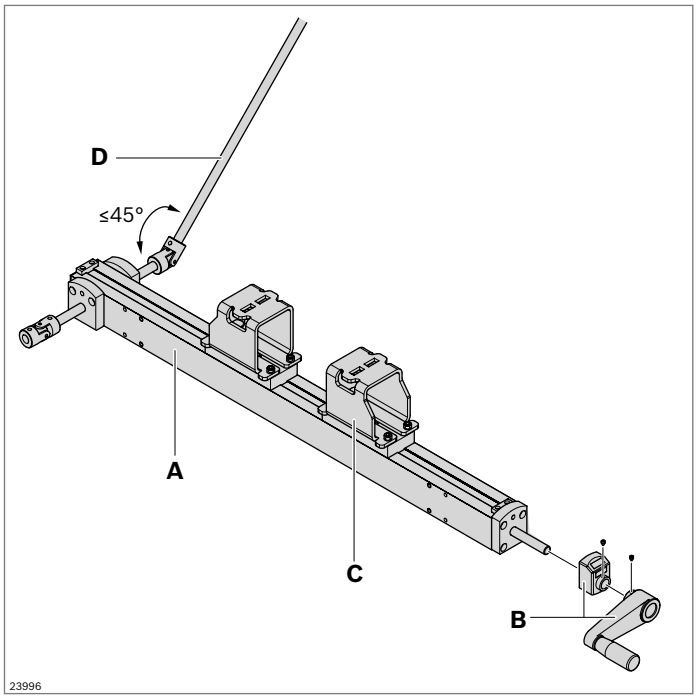

Adjustment unit

- Can be used for parallel width adjustment

Adjustment unit (A)	No.
	3 842 547 971

Crank handle (B)	No.
	3 842 547 990

Connection kit (C)	No.
	3 842 547 729

Profile rail D12 (D)		**L** (mm)	No.
1 pc		200 ... 3000	**3 842 993 306 / L**
6 pcs		3000	**3 842 533 841**

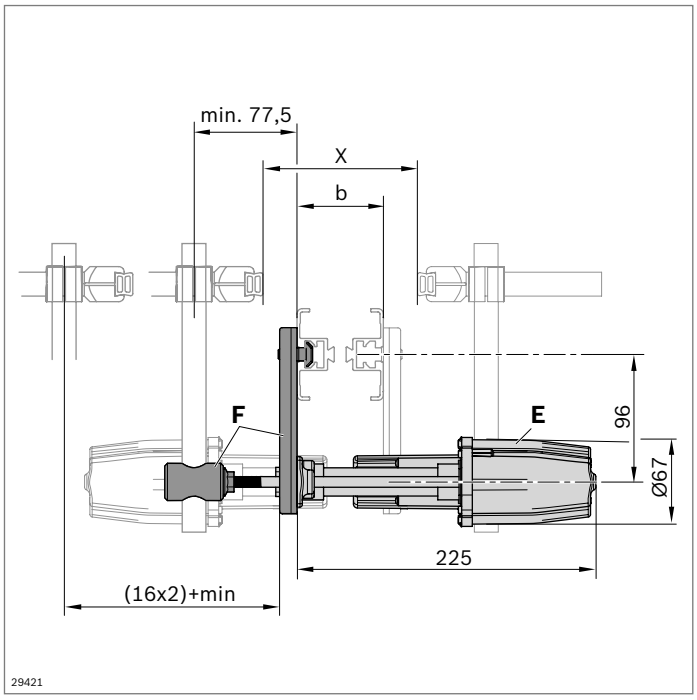

- Can be used for automatic (pneumatic) adjustment of lateral guides
- see also VarioFlow *plus* catalog (**R999000401**)

Adjustment unit (E)	No.
	3 842 547 707

Assembly kit (F)	No.
	3 842 547 718

Linear guides

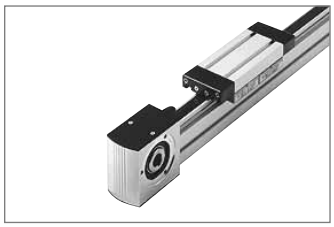

Cam roller guides LF6S
(p. 13-6)

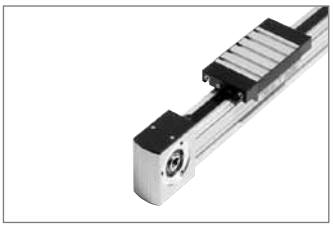

Cam roller guides LF6C
(p. 13-11)

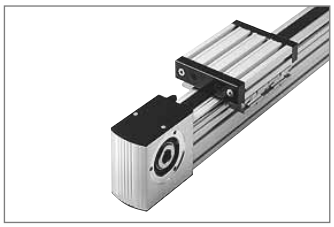

Cam roller guides LF12S
(p. 13-16)

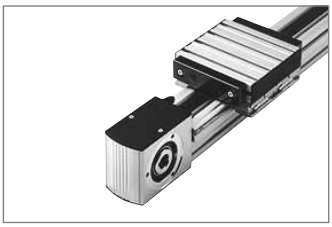

Cam roller guides LF12C
(p. 13-23)

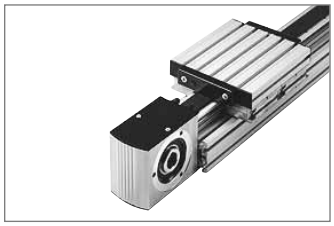

Cam roller guides LF20S
(p. 13-30)

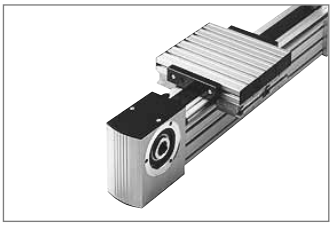

Cam roller guides LF20C
(p. 13-37)

Center shafts, synchronous shafts (p. 13-47)

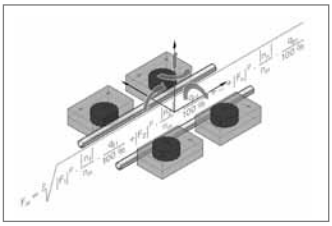

Design (p. 13-49)

Linear guides

- For constructing linear guides based on cam roller guides
- Cam roller guides are suitable for applications with high speeds and medium loads, in particular for the construction of handling equipment, feed systems, guides in work machines, and many other applications
- Fully pre-assembled in any required length or as individual components for assembly on site
- Without drive or with toothed-belt drive for attaching gears and motors

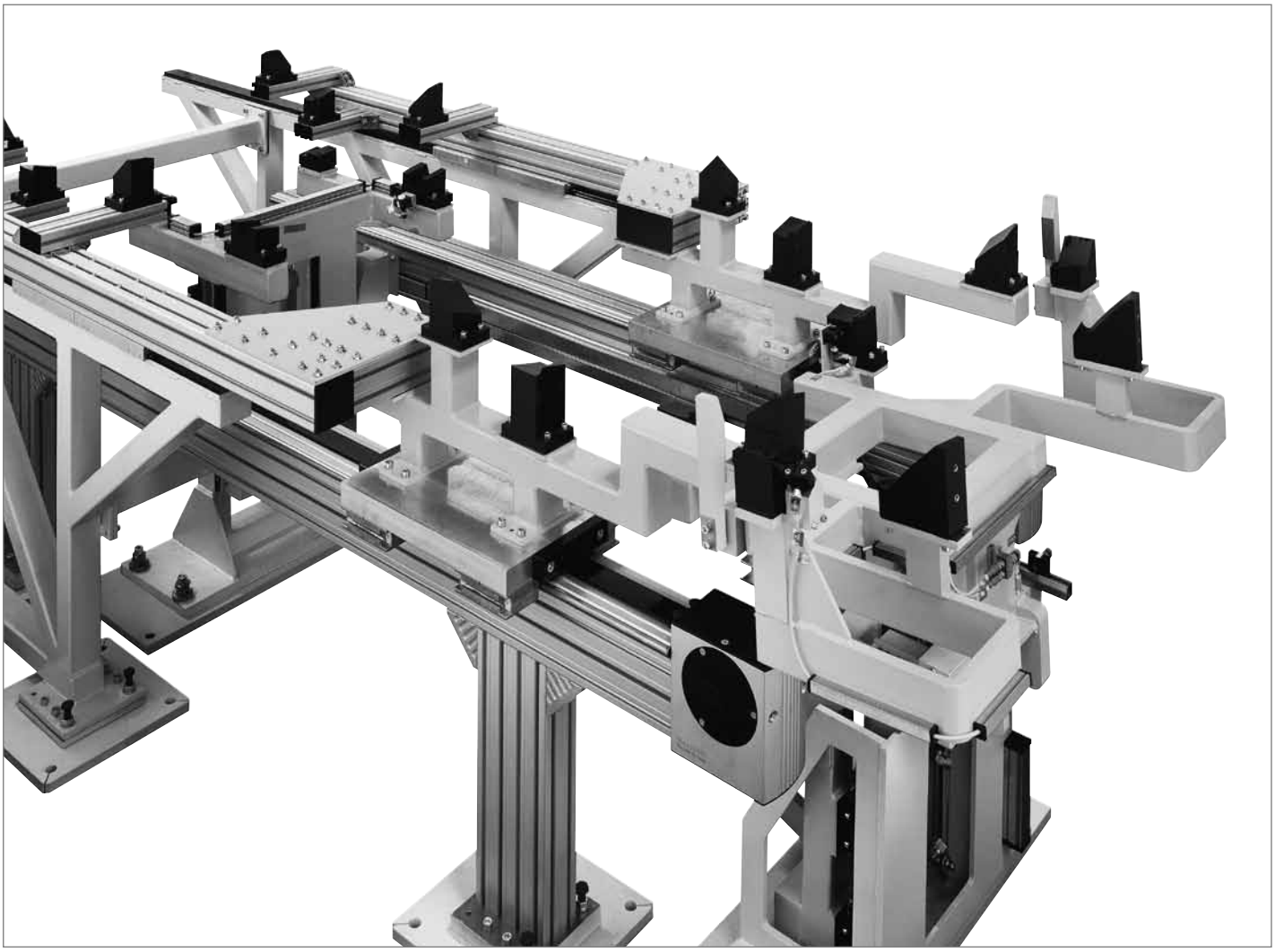

Linear guides – sizes, designs, and loads

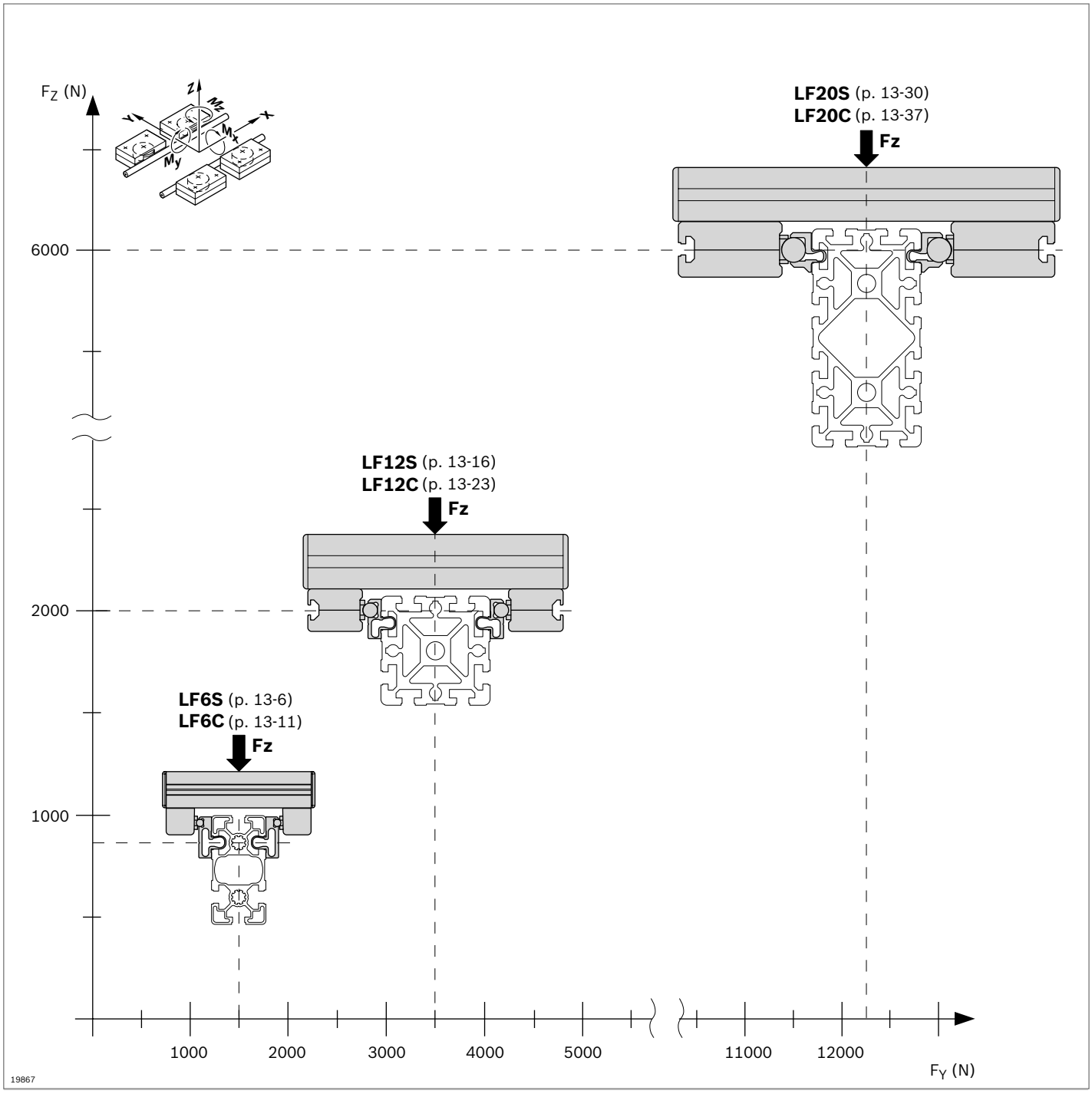

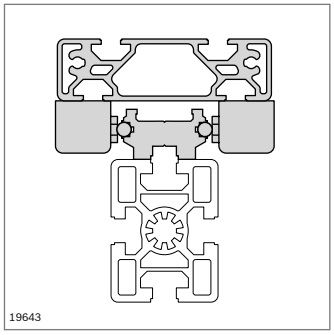

LF...S

- Compact construction
- Fixed track width
- v_{max} = 5 m/s

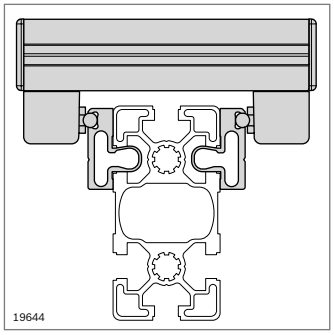

LF...C

- Freely selectable track width for greater torque absorption
- v_{max} = 5 m/s

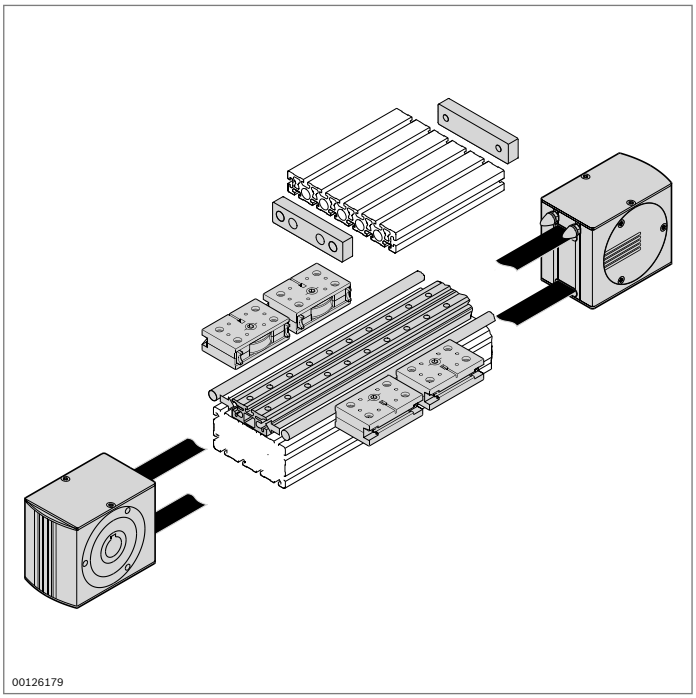

Cam roller guides LF...S

- Cam roller guide LF...S with fixed track widths
- Guide rail made of aluminum with hardened and polished VA guide rods
- Simple mounting on strut profile or directly on flat surface, e.g. on a machine
- High precision, dimensional stability and torsional rigidity
- Lighter and cheaper than steel guides
- Light trolley with good torsional rigidity
- Freely selectable trolley lengths
- Freely selectable stroke lengths possible
- High permissible speed

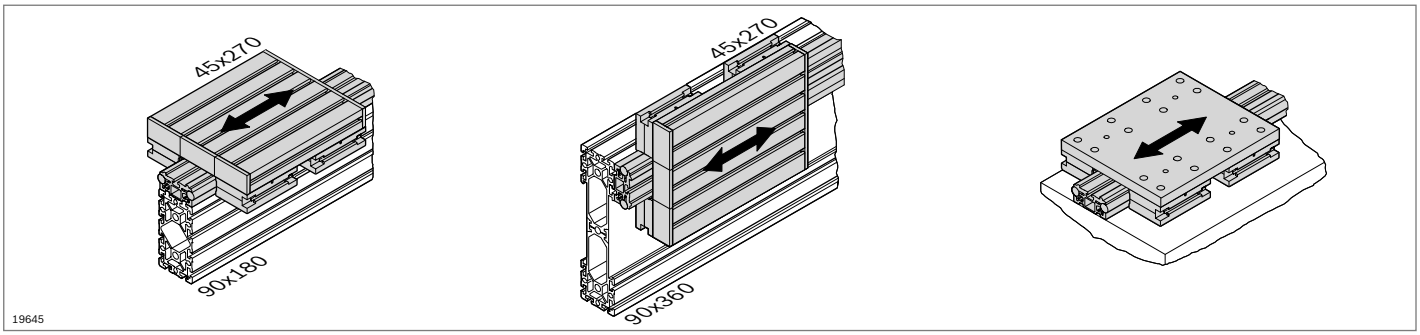

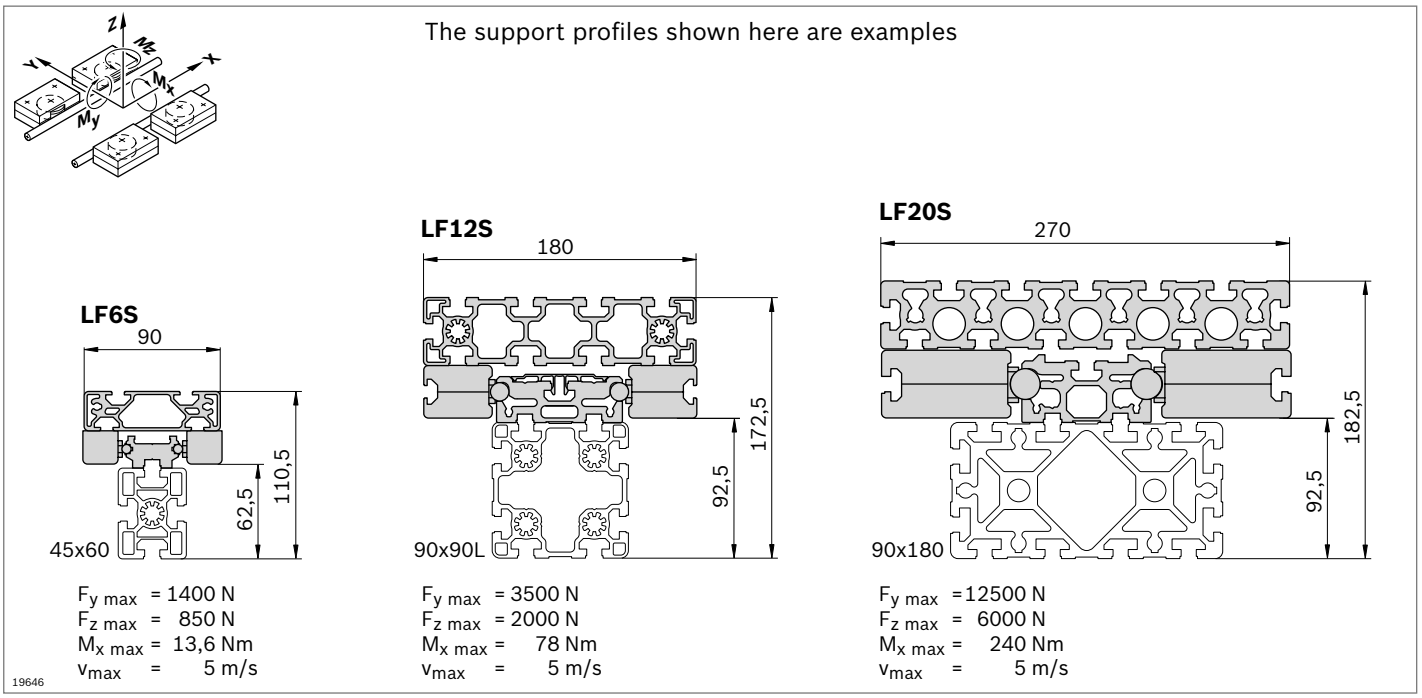

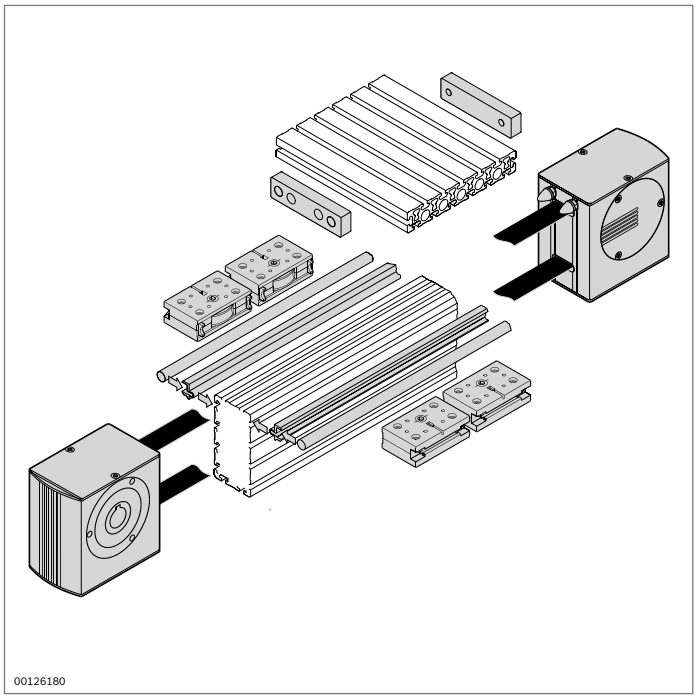

Cam roller guides LF...C

- Cam roller guide LF...C for free choice of track widths and large track widths
- Clamping profile made of aluminum with hardened and polished VA guide rods
- Easy assembly through clipping the clamping profile into the slots of any Rexroth profile with 10 mm slot
- Optimally adjustable to different loads
- Greater torque absorption due to a C construction and free choice of track width
- Light trolley with good torsional rigidity
- Freely selectable trolley lengths and widths
- Freely selectable stroke lengths possible
- High permissible speed

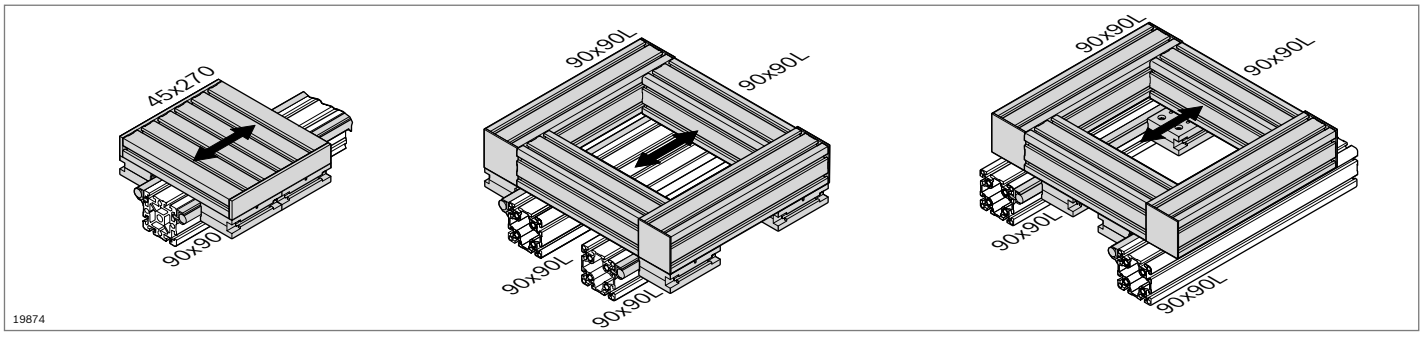

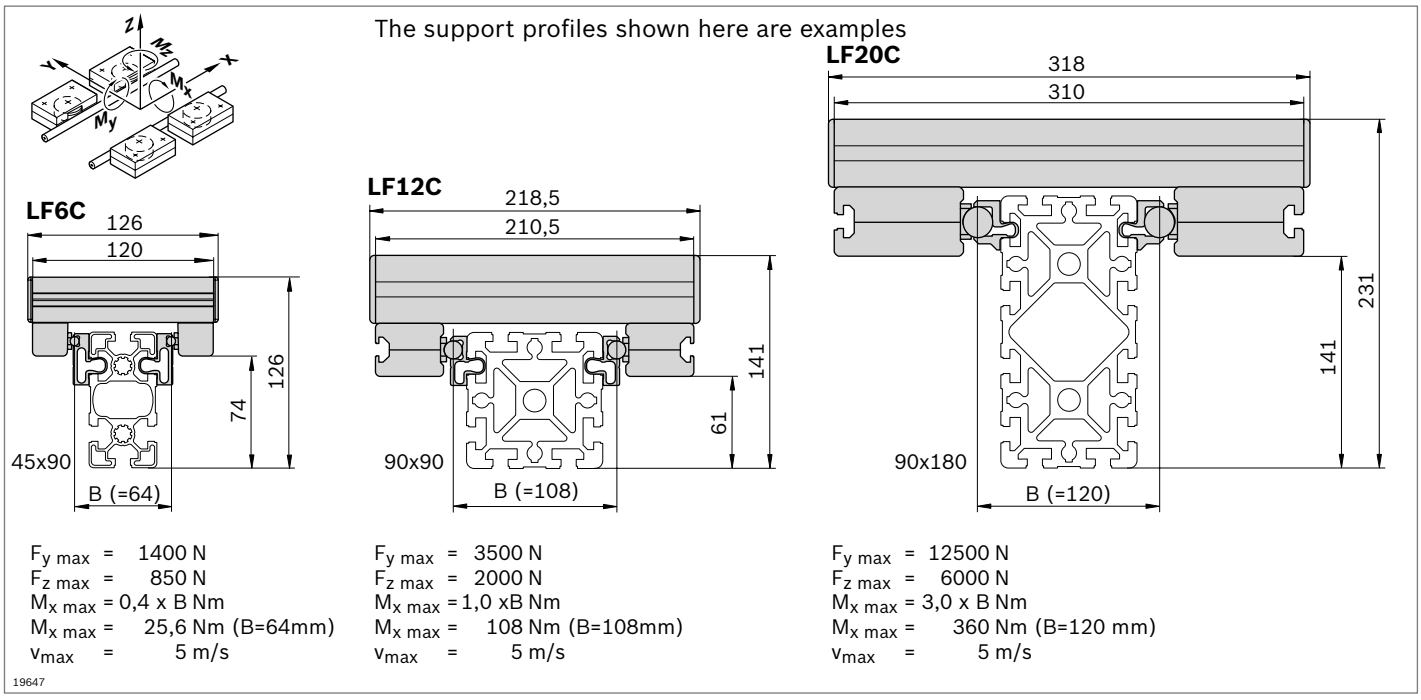

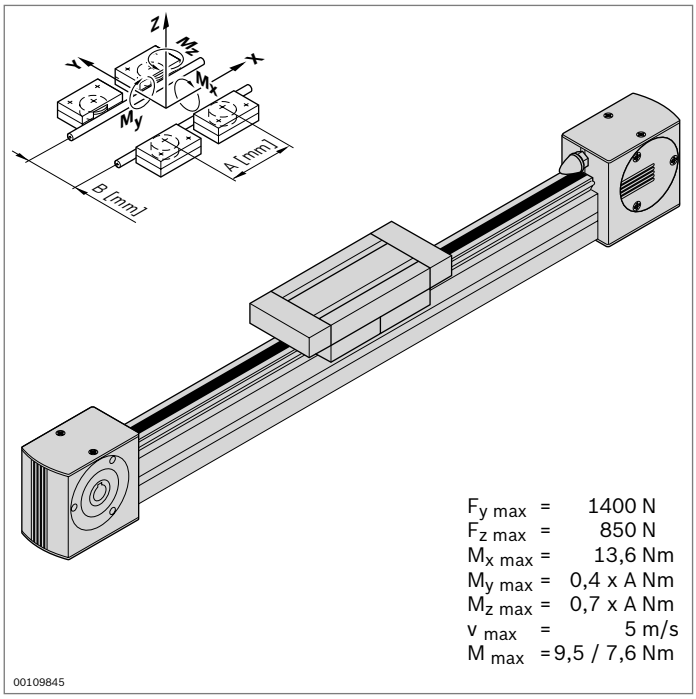

Cam roller guide LF6S – complete axis

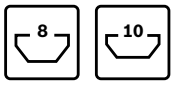

- Fully assembled cam roller guide
- Stroke and trolley length can be individually selected
- Rail profile screwed onto strut profile 45x60
- Incl. toothed belt drive; additional notes on the drive concept (p. 13-44)

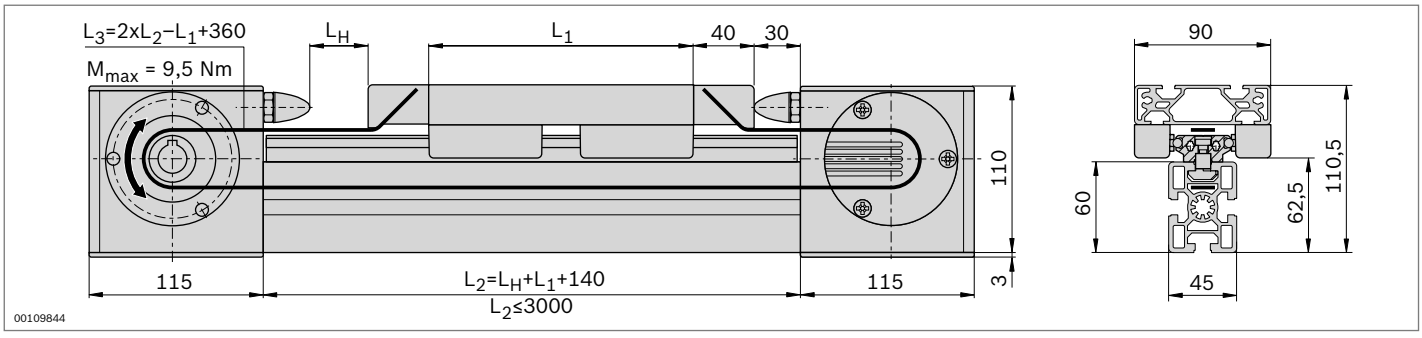

Technical data

See pages 13-57 for notes on layout and drive

Complete axis LF6S	L_H/L_1 (mm)	No.
	$L_1+80 \le L_H \le 2710$ $150 \le L_1 \le 1000$	**3 842 998 495 / L_H / L_1**

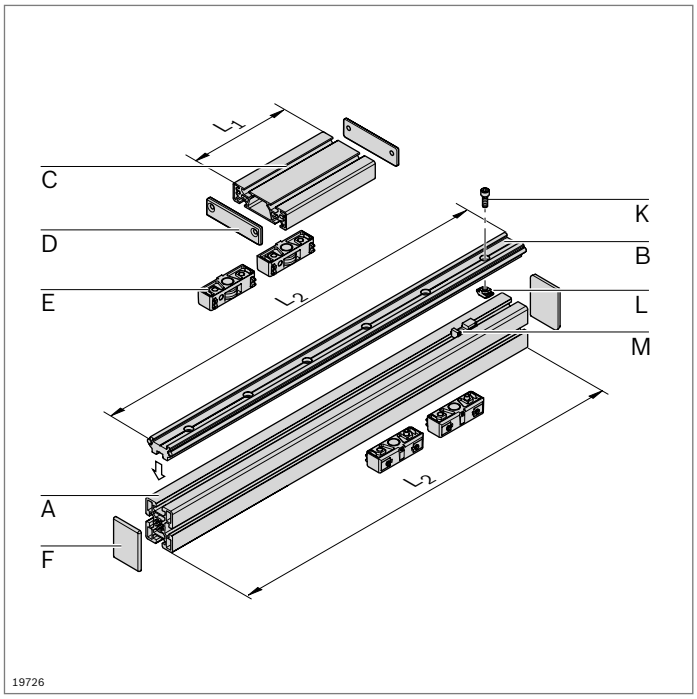

Cam roller guide LF6S – components

- Components for the individual assembly of cam roller guides, with or without drive

Parts list for cam roller guide LF6S without drive

Component		No.	Qty.	Page
A	Profile 45x60	**3 842 990 570 / L_2**	1	2-39
B	Guide profile LF6S	**3 842 993 966 / L_2**	1	13-8
C	Trolley profile LF6S	**3 842 993 061 / L_1**	1	13-8
D	Cover cap LF6S	**3 842 535 645**	2	13-9
E	Guide bearing LF6	**3 842 535 662**	4	13-8
F	Cover cap 45x60	**3 842 548 755**	2	2-39
K	Cylinder bolt M6x20 – DIN7984		n[1)]	
L	T-nut M6, 10 mm slot	**3 842 530 285**	n[1)]	3-4
M	Sliding block	**3 842 146 877**	n[1)]	13-8

[1)] For identification see page 13-8

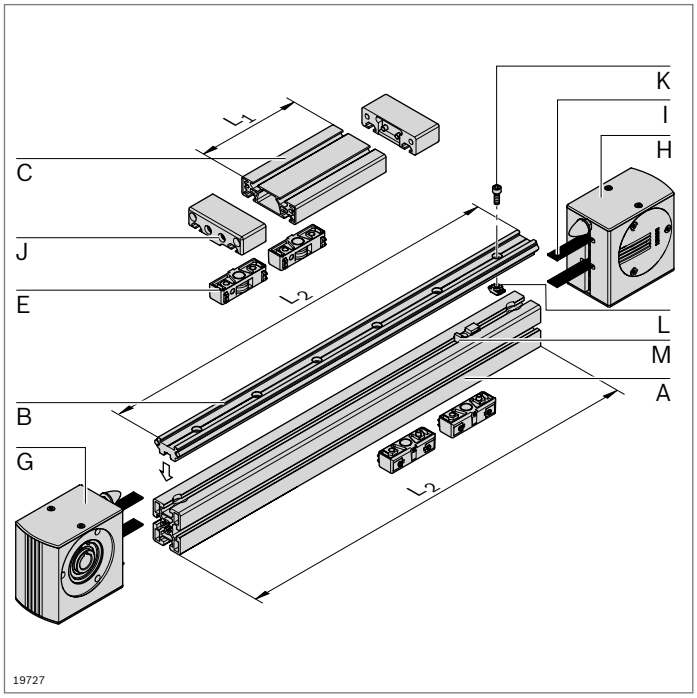

Parts list for cam roller guide LF6S with drive

Component		No.	Qty.	Page
A	Profile 45x60 LF LF	**3 842 993 085 / L_2**	1	2-39
B	Guide profile LF6S	**3 842 993 966 / L_2**	1	13-8
C	Trolley profile LF6S	**3 842 993 061 / L_1**	1	13-8
E	Guide bearing LF6	**3 842 535 662**	4	13-8
G	Drive head LF6S	**3 842 526 410**	1	13-9
H	Return head LF6S	**3 842 526 411**	1	13-10
I	Toothed belt LF6S	**3 842 994 659 / L_3[1)]**	1	13-10
J	Belt connector LF6S	**3 842 535 682**	2	13-10
K	Cylinder bolt M6x20 – DIN7984		n[2)]	
L	T-nut M6, 10 mm slot	**3 842 530 285**	n[2)]	3-4
M	Sliding block	**3 842 146 877**	n[2)]	13-8

[1)] $L_3 = 2xL_2 - L_1 + 360$

[2)] For identification see page 13-8

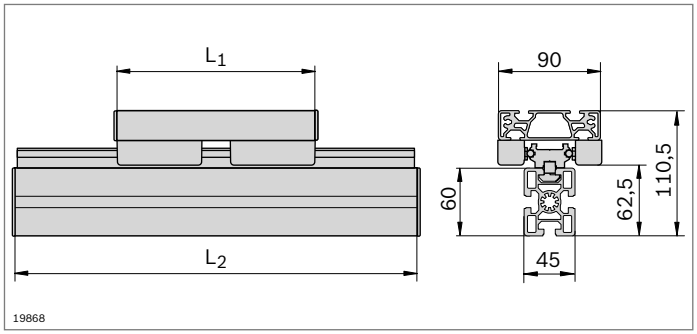

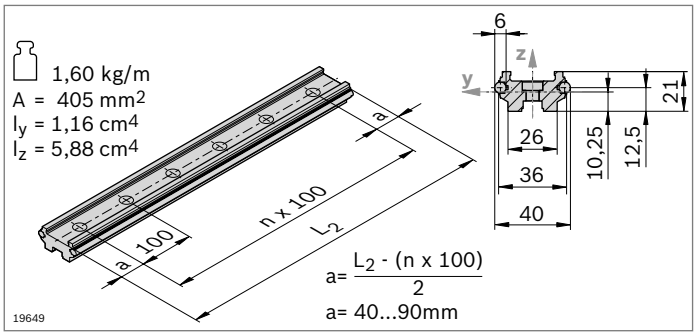

- Guide profile LF6S with integrated guide rods
- Installation on MGE strut profiles with 10 mm slot or directly on a flat surface

Guide profile		L_2 (mm)	No.
LF6S	1 pc	150 ... 3000	**3 842 993 966 / L_2**
	10 pcs	3000	**3 842 539 412**

Material:	Guide profile: aluminum, anodized Guide rod: Solid shaft VA, induction hardened, polished
Condition on delivery:	Ungreased guide rods; greasing according to assembly instructions **3 842 527 226**
Accessories, required:	Cylinder bolt DIN 7984 – M6x20 T-nut M6, 10 mm slot **3 842 530 285** (p. 3-4)

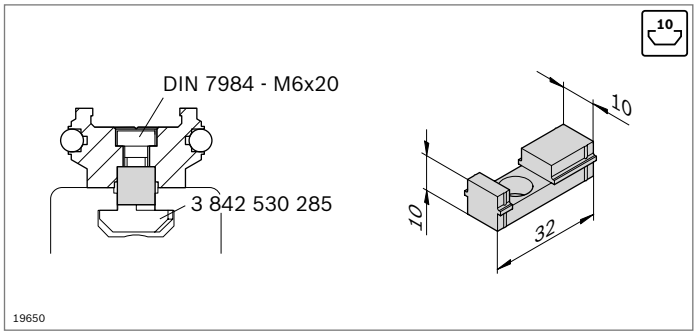

- Sliding block as a centering aid for mounting the guide profile in a 10 mm profile slot

Sliding block		No.
	50	**3 842 146 877**

Material:	PA; black

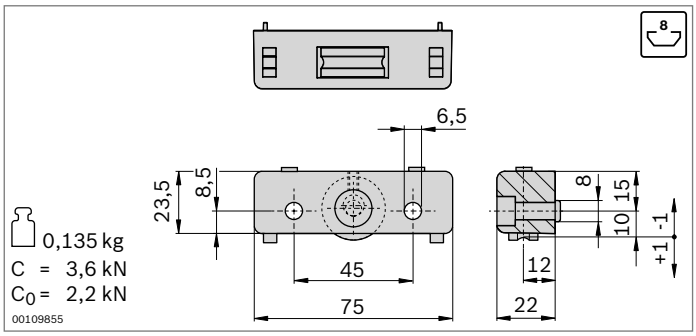

- Guide bearing for trolley construction
- Guiding via guide rod
- Rollers with ball bearings, permanently lubricated
- Lubricating felts with guide rod lubrication reservoir
- Play-free roller adjustment via eccentric bolts

Guide bearing		No.	FS
LF6	2	**3 842 535 662**	2xFS1

Material:	Housing: diecast aluminum Roller: steel, hardened, polished
Scope of delivery:	Incl. fastening material (FS)
Condition on delivery:	Lubricating felts ungreased; greasing according to assembly instructions **3 842 527 226**

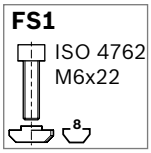

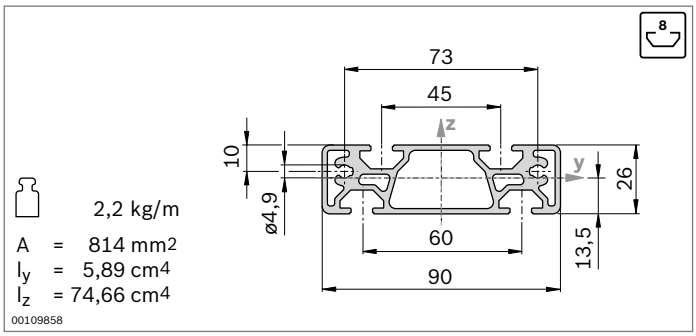

- Trolley profile for the construction of trolley LF6S

Trolley profile	L_1 (mm)	No.
LF6S	150 ... 3000	**3 842 993 061 / L_1**

Material:	Aluminum, anodized

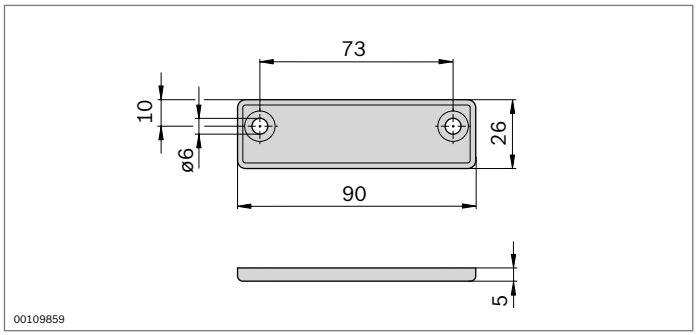

- Cover cap for trolley profile LF6S
- For use on trolleys which are not driven by a toothed belt

Cover cap		No.	FS
LF6S	2	**3 842 535 645**	2xFS2

Material: PA; black

FS2

ISO 7050
5,5x19

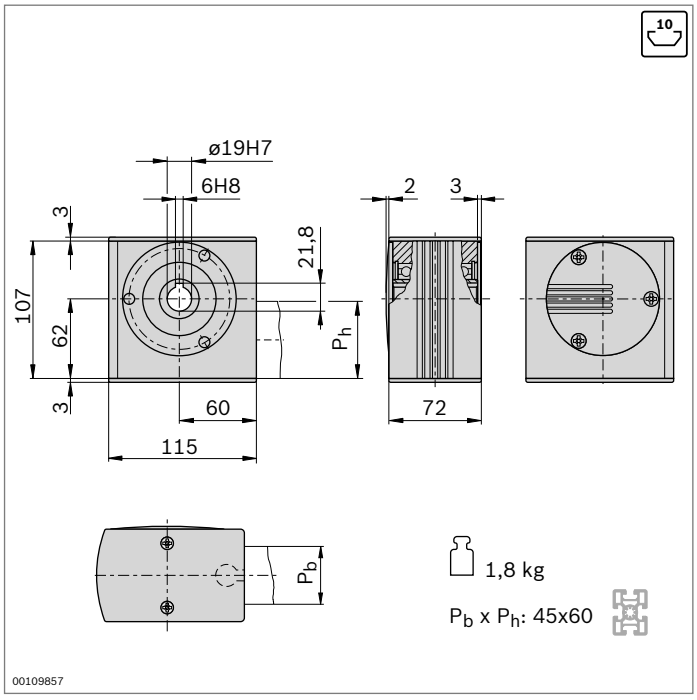

- Drive head for transferring drive torque to a toothed belt
- For direct mounting of a motor or (in conjunction with a center shaft) for mounting a hollow shaft gear or a coupling (p. 13-46)
- Mounted with end connector directly on profile 45x60
- Profile machining: LF blind hole drilling for longitudinal end connector

Drive head	No.	FS
LF6S	**3 842 526 410**	2xFS3, FS4

Material: Aluminum, anodized
Hollow shaft: steel; galvanized
Cover caps: PA; black

Scope of delivery: Incl. fastening material (FS), cover caps

FS3

ISO 7380
M8x40

FS4

DIN 439
M8

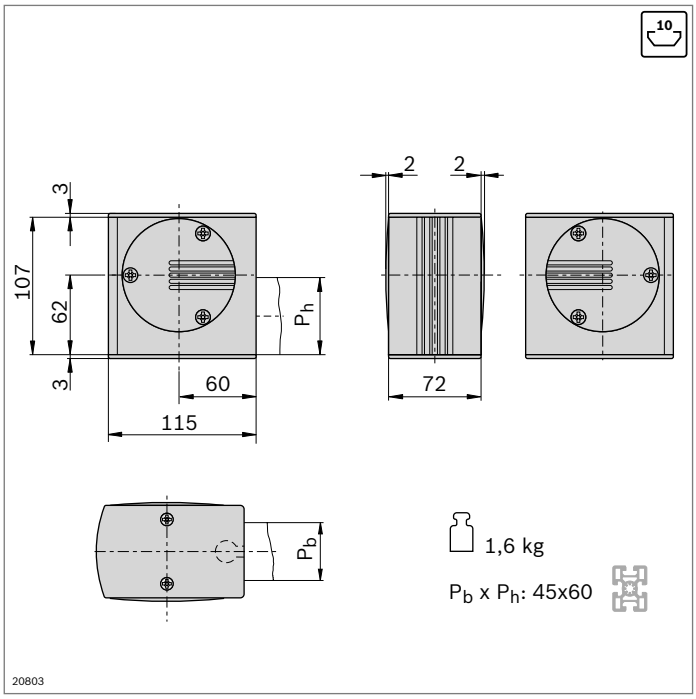

- Return head for tensioning the toothed belt and changing its direction
- Mounted directly on profile using longitudinal end connector
- Profile machining: LF blind hole drilling for longitudinal end connector

Return head	No.	FS
LF6S	**3 842 526 411**	2xFS3, FS4

Material: Aluminum, anodized
Hollow shaft: steel; galvanized
Cover caps: PA; black
Scope of delivery: Incl. fastening material (FS), cover caps

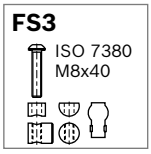

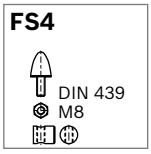

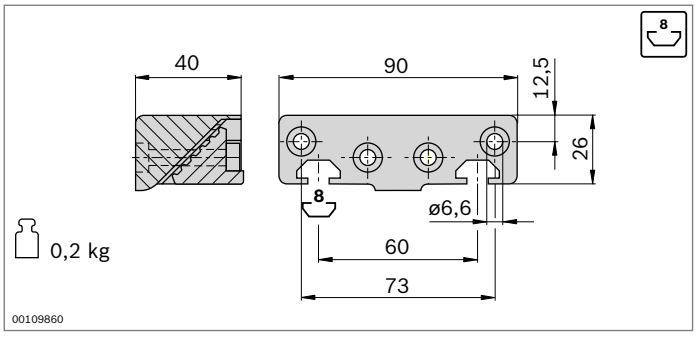

- Belt connector for fixing the toothed belt on the front of the trolley
- All connecting parts for mounting on the trolley profile LF6S are included

Belt connector		No.	FS
LF6S	2	**3 842 535 682**	2xFS5, 2xFS6

Material: Aluminum, painted black
Scope of delivery: Incl. fastening material (FS)

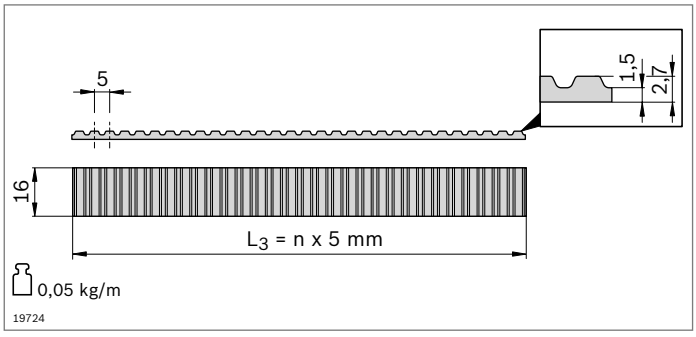

- Toothed belt as a trolley drive
- Pitch: AT5

Toothed belt	L_3 (mm)	No.
LF6S	300 ... 50000	**3 842 994 659 / L_3**[1)]
	50000	**3 842 513 646**

[1)] $L_3 = 2xL_2 - L_1 + 360$
Material: PU with embedded steel wires

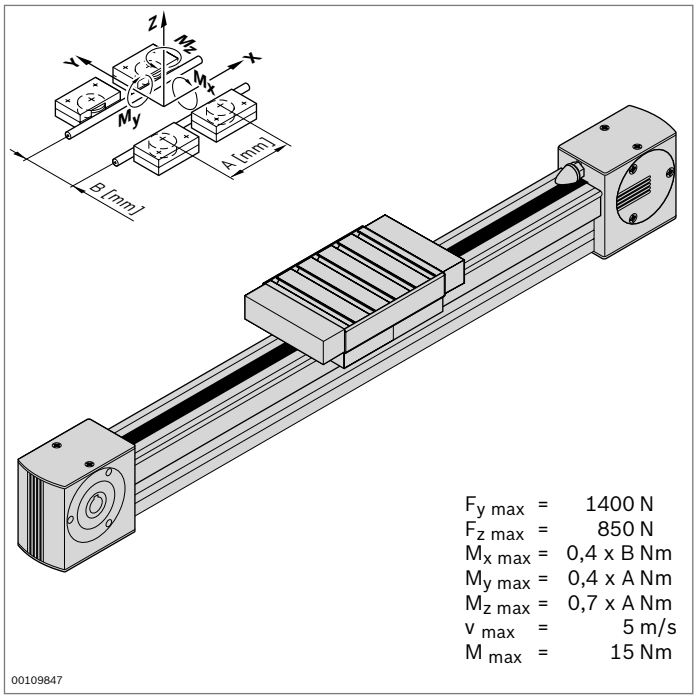

Cam roller guide LF6C – complete axis

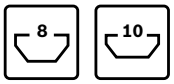

- Fully assembled cam roller guide
- Stroke can be individually selected
- Clamping profile clipped into strut profile 45x90L
- Incl. toothed belt drive; additional notes on the drive concept (p. 13-44)

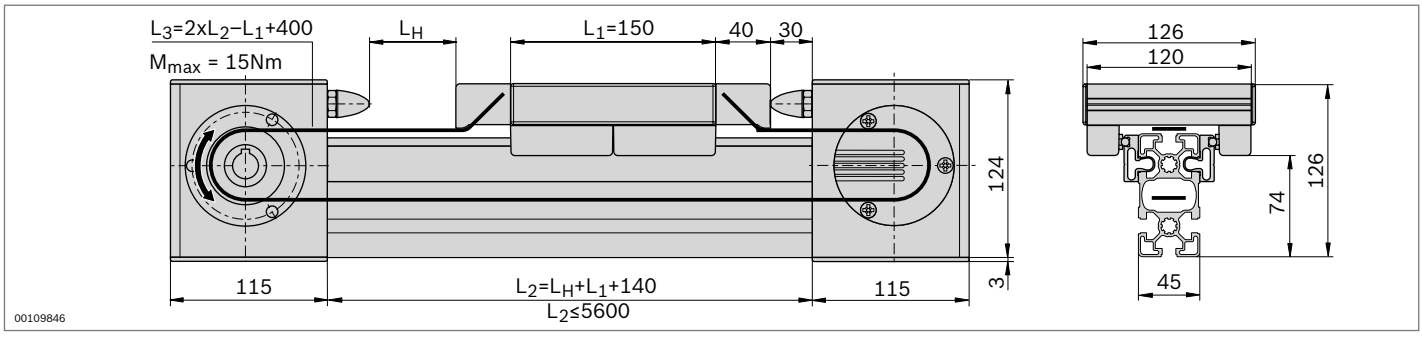

Technical data

See pages 13-50 for notes on layout and drive

Complete axis	L_H (mm)	No.
LF6C	50 ... 5310	**3 842 998 496 / L_H**

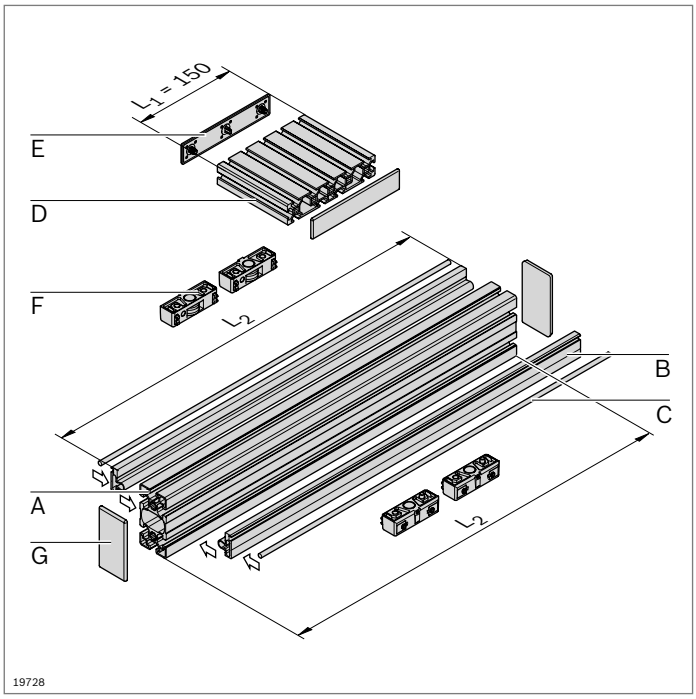

Cam roller guide LF6C – components

- Components for the individual assembly of cam roller guides, with or without drive

Parts list for cam roller guide LF6C without drive

Component		No.	Qty.	Page
A	Profile 45x90L	**3 842 992 432 / L_2**	1	2-40
B	Clamping profile LF6C	**3 842 992 925 / L_2**	2	13-13
C	Guide rod LF6	**3 842 993 967 / L_2**	2	13-13
D	Trolley profile LF6C	**3 842 993 952 / 120 mm**	1	13-13
E	Cover cap LF6C	**3 842 539 120**	2	13-14
F	Guide bearing LF6	**3 842 535 662**	4	13-13
G	Cover cap 45x90	**3 842 548 757**	2	2-40

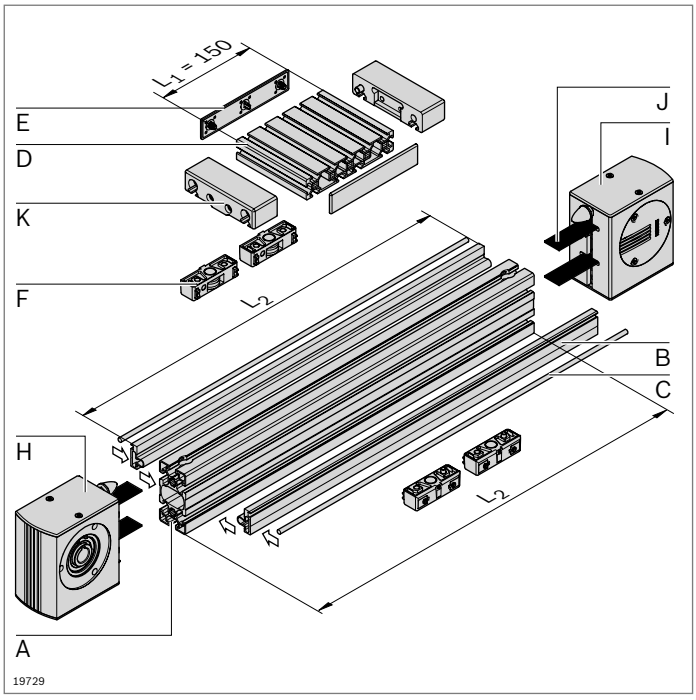

Parts list for cam roller guide LF6C with drive

Component		No.	Qty.	Page
A	Profile 45x90L LF LF	**3 842 993 084 / L_2**	1	2-40
B	Clamping profile LF6C	**3 842 992 925 / L_2**	2	13-13
C	Guide rod LF	**3 842 993 967 / L_2**	2	13-13
D	Trolley profile LF6C	**3 842 993 952 / 120 mm**	1	13-13
E	Cover cap LF6C	**3 842 539 120**	2	13-14
F	Guide bearing LF6	**3 842 535 662**	4	13-13
H	Drive head LF6C	**3 842 526 416**	1	13-14
I	Return head LF6C	**3 842 526 417**	1	13-15
J	Toothed belt LF6C	**3 842 994 711 / L_3[1)]**	1	13-15
K	Belt connector LF6C	**3 842 535 681**	2	13-15

[1)] $L_3 = 2xL_2 - L_1 + 400$

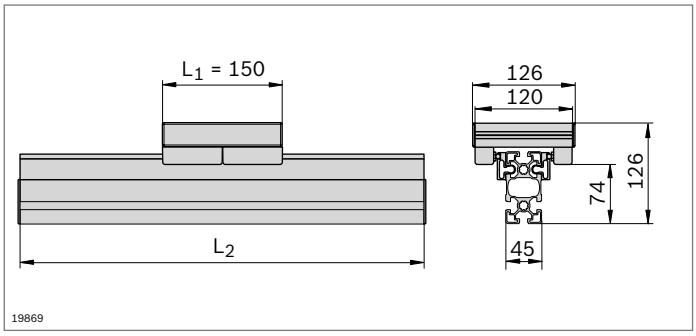

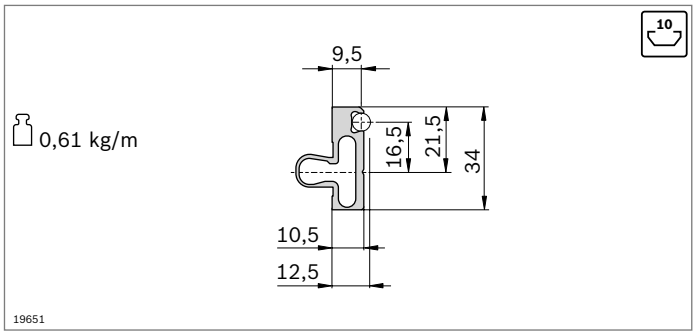

- The clamping profile is clipped into any 10 mm slot of the strut profile and it holds the guide rods

Clamping profile		L_2 (mm)	No.
LF6C	1 pc	150 ... 3000	**3 842 992 925 / L_2**
	20 pcs	3000	**3 842 518 896**

Material: Aluminum, anodized

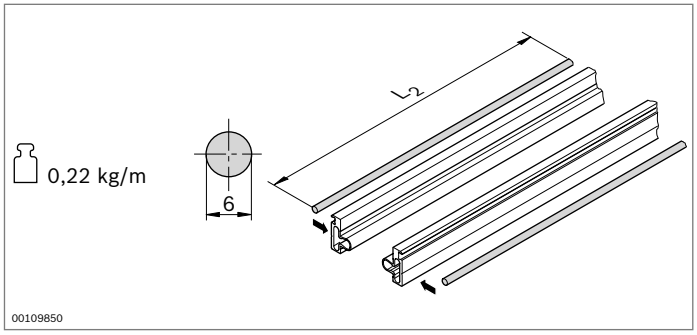

- The guide rod is pressed into the clamping profile
- The guide rod guides the guide bearing

Guide rod	L_2 (mm)		No.
LF6	150 ... 3000	1	**3 842 993 967 / L_2**
	3000	20	**3 842 539 414**

Material: Solid shaft VA, induction hardened, polished
Condition on delivery: Ungreased; greasing according to assembly instructions **3 842 527 226**

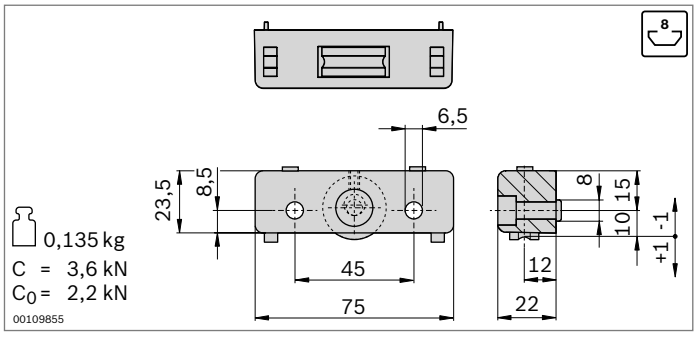

- Guide bearing for trolley construction
- Guiding via guide rod
- Rollers with ball bearings, permanently lubricated
- Lubricating felts with guide rod lubrication reservoir
- Play-free roller adjustment via eccentric bolts

Guide bearing		No.	FS
LF6	2	**3 842 535 662**	2xFS1

Material: Housing: die-cast aluminum
Roller: steel, hardened, polished
Scope of delivery: Incl. fastening material (FS)
Condition on delivery: Lubricating felts ungreased; greasing according to assembly instructions **3 842 527 226**

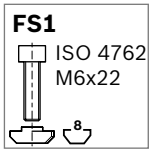

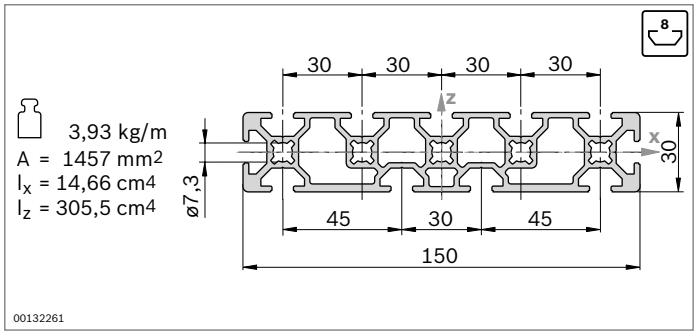

- Trolley profile for the construction of trolley LF6C

Trolley profile	L (mm)	No.
LF6C	150 ... 3000	**3 842 993 952 / L**

Material: Aluminum, anodized

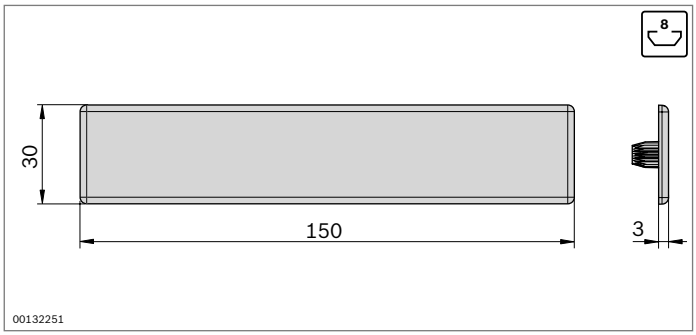

- Cover cap for trolley profile LF6C
- For use on trolleys which are not driven by a toothed belt

Cover cap		No.
LF6C	2	**3 842 539 120**

Material: PA, black

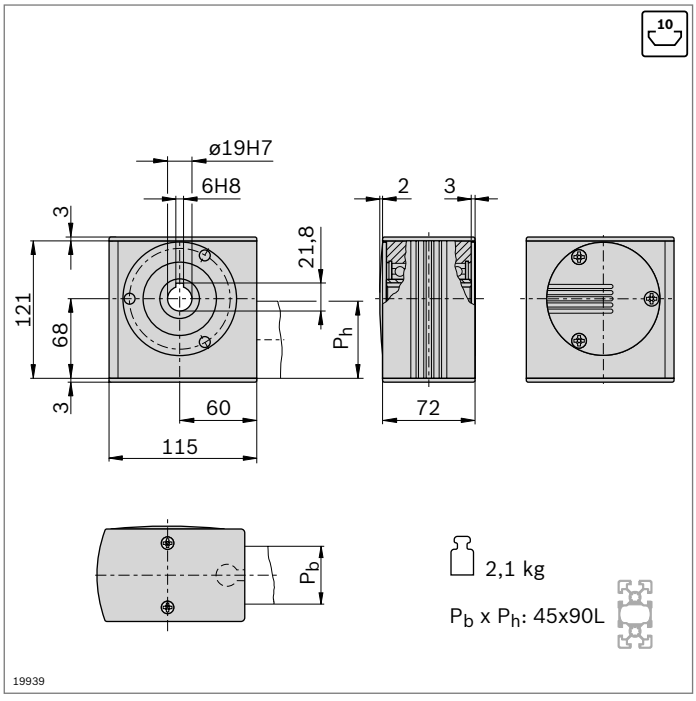

- Drive head for transferring drive torque to a toothed belt
- For direct mounting of a motor or (in conjunction with a center shaft) for mounting a hollow shaft gear or a coupling (p. 13-46)
- Mounted directly on profile 45x90L using longitudinal end connector
- Profile machining: LF blind hole drilling for longitudinal end connector

Drive head	No.	FS
LF6C	**3 842 526 416**	2xFS2, FS3

Material: Aluminum, anodized
Hollow shaft: steel; galvanized
Cover caps: PA, black

Scope of delivery: Incl. fastening material (FS), cover caps

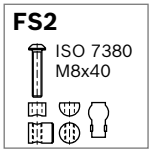

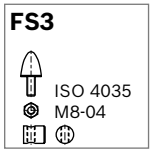

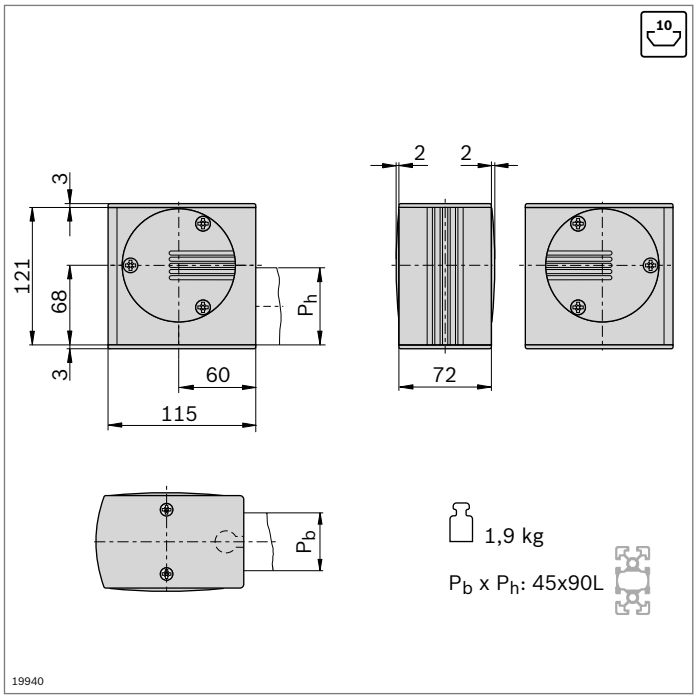

- Return head for tensioning the toothed belt and changing its direction
- Mounted directly on profile 45x90L using longitudinal end connector
- Profile machining: LF blind hole drilling for longitudinal end connector

Return head	No.	FS
LF6C	**3 842 526 417**	2xFS2, FS3

Material: Aluminum, anodized
Hollow shaft: steel; galvanized
Cover caps: PA, black
Scope of delivery: Incl. fastening material (FS), cover caps

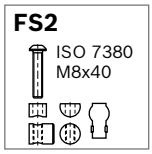

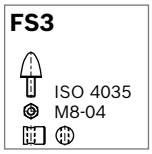

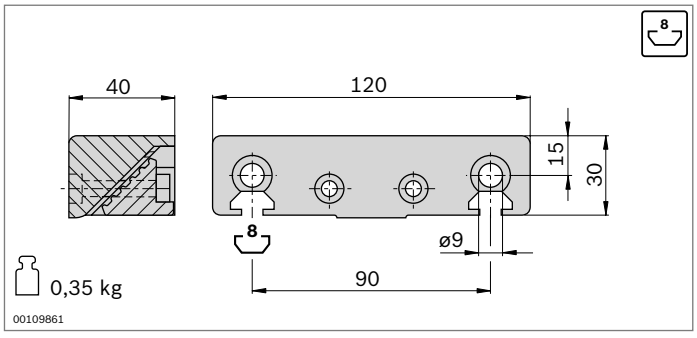

- Belt connector for fastening the toothed belt to the trolley slot
- All connecting parts for mounting on the trolley profile LF6C are included

Belt connector		No.	FS
LF6C	2	**3 842 535 681**	2xFS4, 2xFS5, 2xFS6

Material: Aluminum, painted black
Scope of delivery: Incl. fastening material (FS)

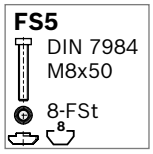

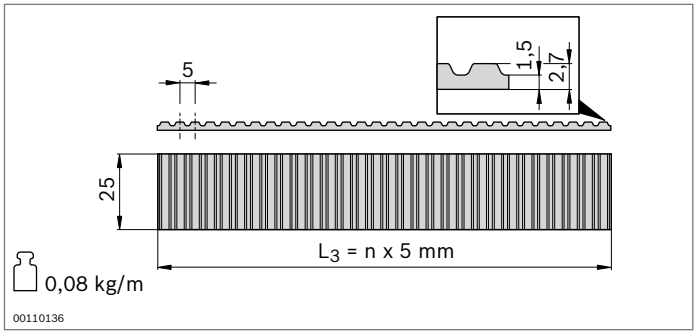

- Toothed belt as a trolley drive
- Pitch: AT5

Toothed belt	L_3 (mm)	No.
LF6C	300 ... 50000	**3 842 994 711 / L_3**[1)]
	50000	**3 842 518 856**

[1)] $L_3 = 2xL_2 - L_1 + 400$
Material: PU with embedded steel wires

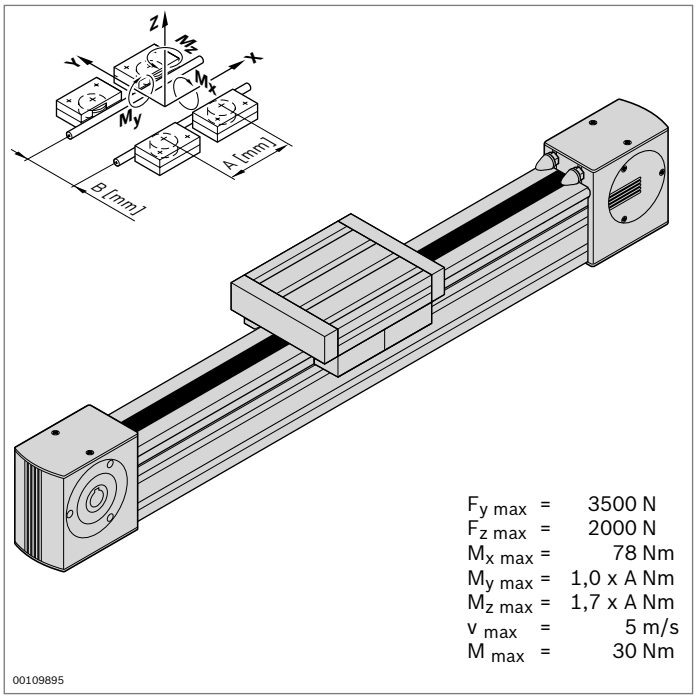

Cam roller guide LF12S – complete axis

10

- Fully assembled cam roller guide
- Stroke and trolley length can be individually selected
- Rail profile screwed onto strut profile 90x90L
- Incl. toothed belt drive; additional notes on the drive concept (p. 13-44)

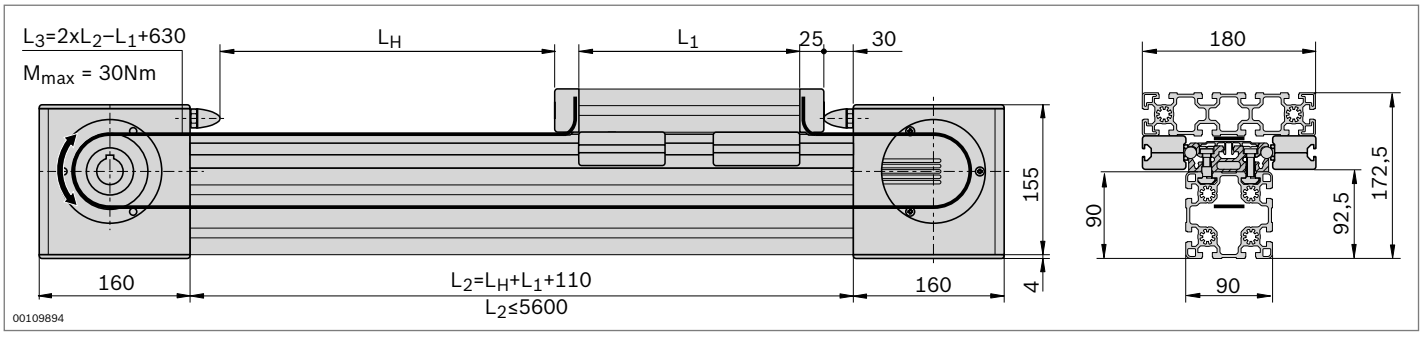

Technical data

See pages 13-57 for notes on layout and drive

Complete axis	L_H / L_1 (mm)	No.
LF12S	$L_1+50 \le L_H \le 5310$ $180 \le L_1 \le 1000$	**3 842 998 497 / L_H / L_1**

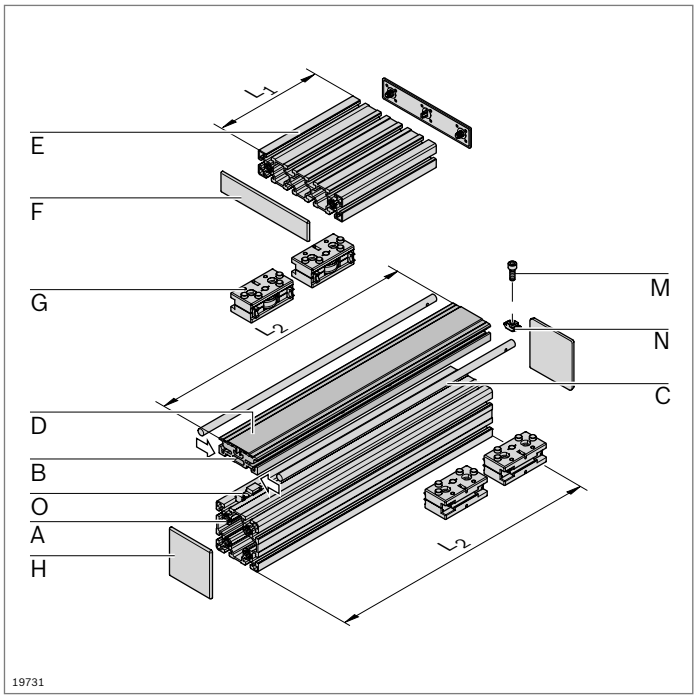

Cam roller guide LF12S – components

- Components for the individual assembly of cam roller guides, with or without drive

Parts list for cam roller guide LF12S without drive

Component		No.	Qty.	Page
A	Profile 90x90L	**3 842 992 415 / L_2**	1	2-43
B	Guide profile LF12S	**3 842 992 438 / L_2**	1	13-18
C	Guide rod LF12	**3 842 993 968 / L_2**	2	13-18
D	Cover profile LF12S	**3 842 993 062 / L_2**	1	13-18
E	Profile 45x180	**3 842 990 335 / L_1**	1	2-41
F	Cover cap 45x180	**3 842 548 795**	2	2-41
G	Guide bearing LF12	**3 842 535 664**	4	13-19
H	Cover cap 90x90L	**3 842 548 759**	2	2-43
M	Cylinder bolt DIN 7984 – M8x30		n[1)]	
N	T-nut M8, 10 mm slot	**3 842 530 287**	n[1)]	3-4
O	Sliding block	**3 842 146 877**	n[1)]	13-18

[1)] For identification see page 13-18

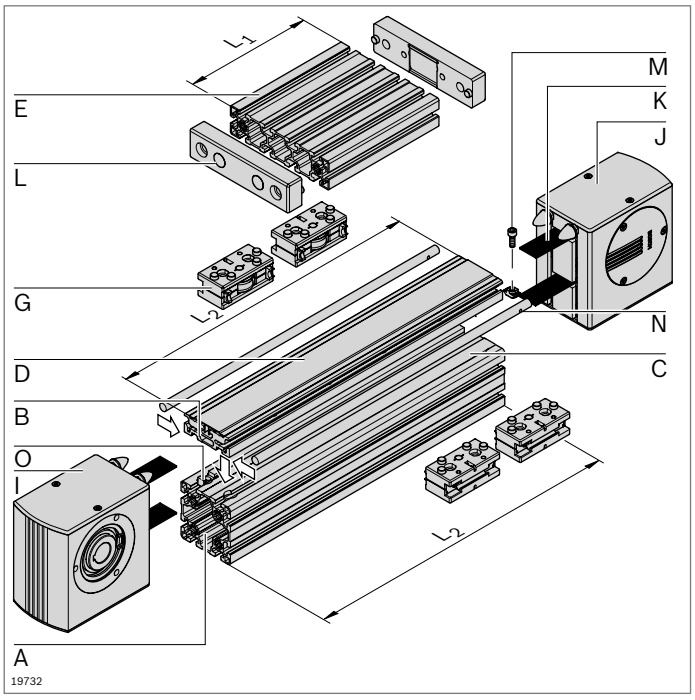

Parts list for cam roller guide LF12S with drive

Component		No.	Qty.	Page
A	Profile 90x90L LF LF	**3 842 992 418 / L_2**	1	2-43
B	Guide profile LF12S	**3 842 992 438 / L_2**	1	13-18
C	Guide rod LF12	**3 842 993 968 / L_2**	2	13-18
D	Cover profile LF12S	**3 842 993 062 / L_2**	1	13-18
E	Profile 45x180 M12 M12	**3 842 990 339 / L_1**	1	2-41
G	Guide bearing LF12	**3 842 535 664**	4	13-19
I	Drive head LF12S	**3 842 526 412**	1	13-21
J	Return head LF12S	**3 842 526 413**	1	13-21
K	Toothed belt	**3 842 994 821 / L_3[1)]**	1	13-22
L	Belt connector	**3 842 535 680**	2	13-22
M	Cylinder bolt DIN 7984 – M8x30		n[2)]	
N	T-nut M8, 10 mm slot	**3 842 530 287**	n[2)]	3-4
O	Sliding block	**3 842 146 877**	n[2)]	13-18

[1)] $L_3 = 2xL_2 - L_1 + 630$

[2)] For identification see page 13-18

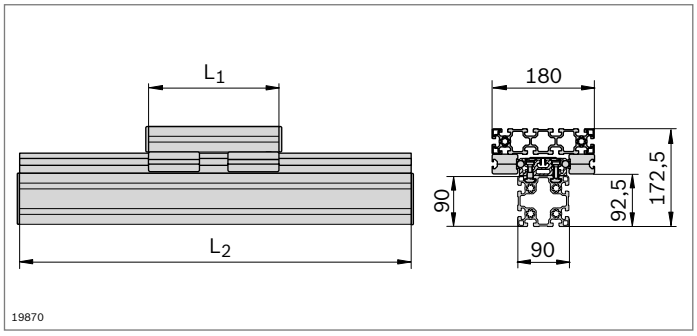

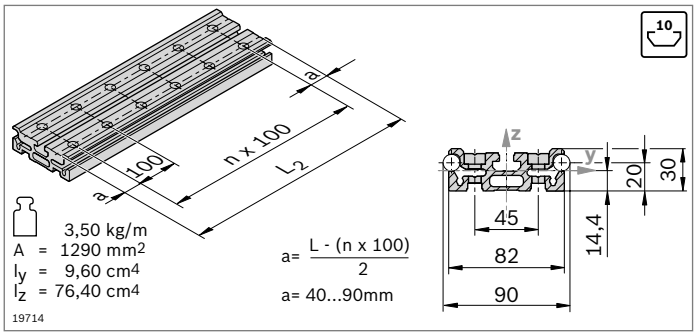

- Guide profile LF12S to hold the guide rods
- Installation on MGE strut profiles with 10 mm slot or directly on a flat surface

Guide profile		L_2 (mm)	No.
LF12S	1 pc	150 ... 5600	**3 842 992 438 / L_2**
	5 pcs	5600	**3 842 511 841**

Material: Aluminum, anodized
Accessories: Cylinder bolt DIN 7984 – M8x30
T-nut M8, 10 mm slot, **3 842 530 287**
Sliding block, cover profile, guide rod

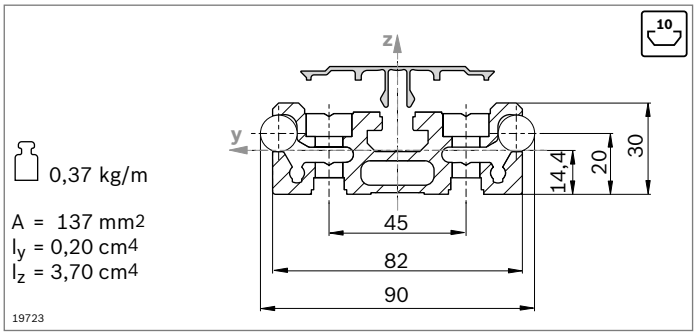

- Cover profile to prevent contamination on threaded connections

Cover profile	L_2 (mm)	No.
LF12S	150 ... 5600	**3 842 993 062 / L_2**

Material: PA, black

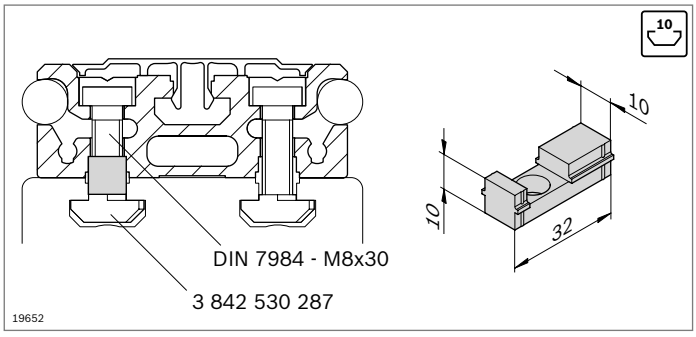

- Sliding block as a centering aid for mounting the guide profile in a 10 mm profile slot

Sliding block		No.
	50	**3 842 146 877**

Material: PA, black

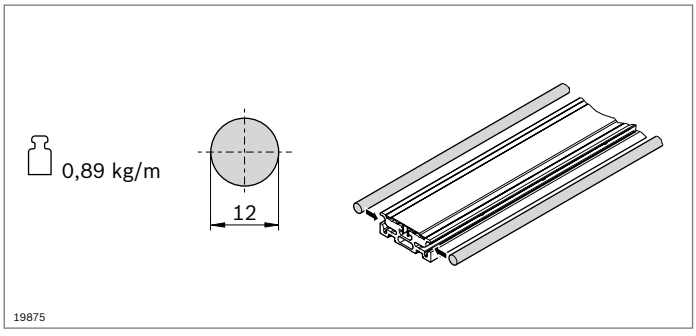

- The guide rod is pressed into the guide profile
- The guide rod guides the guide bearing

Guide rod	L_2 (mm)		No.
LF12	150 ... 2900	1	**3 842 993 968 / L_2**
	2900	20	**3 842 539 415**

Material: Solid shaft VA, induction hardened and polished
Condition on delivery: Ungreased; greasing according to assembly instructions **3 842 527 226**

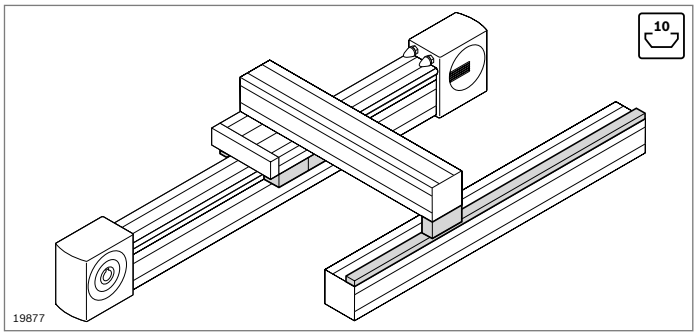

- Guide bearing for trolley construction
- Supporting bearing for brackets to withstand off-center forces
- Guide rail to support supporting bearings (p. 13-20)

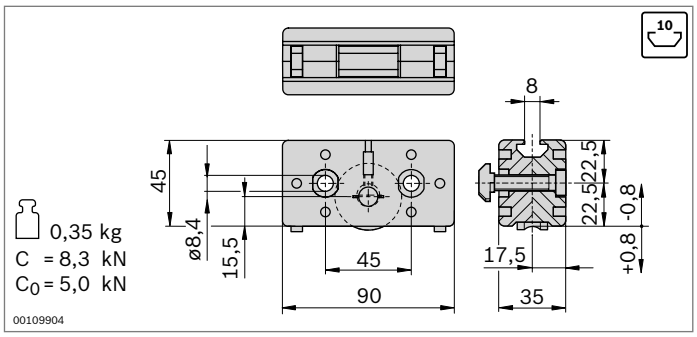

- Guide bearing for trolley construction
- Guiding via guide rod
- Rollers with ball bearings, permanently lubricated
- Lubricating felts with guide rod lubrication reservoir
- Play-free roller adjustment via eccentric bolts
- Replacement of the lubricating felts possible from rear in installed state

FS1

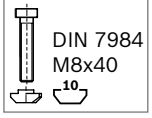

Guide bearing		No.	FS
LF12	2	**3 842 535 664**	2xFS1

Material:	Housing: die-cast aluminum Roller: steel, hardened, polished
Scope of delivery:	Incl. fastening material (FS)
Condition on delivery:	Lubricating felts ungreased; greasing according to assembly instructions **3 842 527 226**

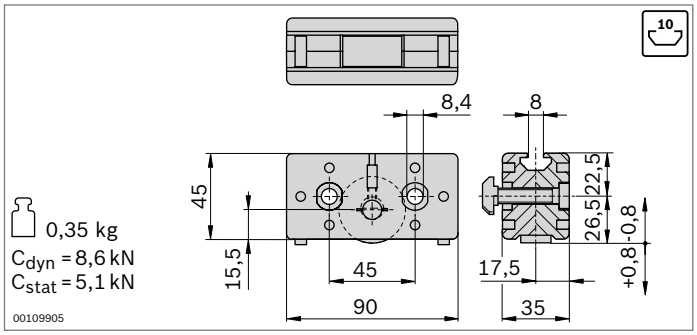

- Supporting bearing for brackets for bearing off-center forces
- For support on the guide rail
- Rollers with ball bearings, permanently lubricated
- Lubricating felts with guide rod lubrication reservoir
- Play-free roller adjustment via eccentric bolts
- Replacement of the lubricating felts possible from rear in installed state

FS2

Supporting bearing		No.	FS
LF12	2	**3 842 535 666**	2xFS2

Material:	Housing: die-cast aluminum Roller: steel, hardened, polished
Scope of delivery:	Incl. fastening material (FS)
Condition on delivery:	Lubricating felts ungreased; greasing according to assembly instructions **3 842 527 226**

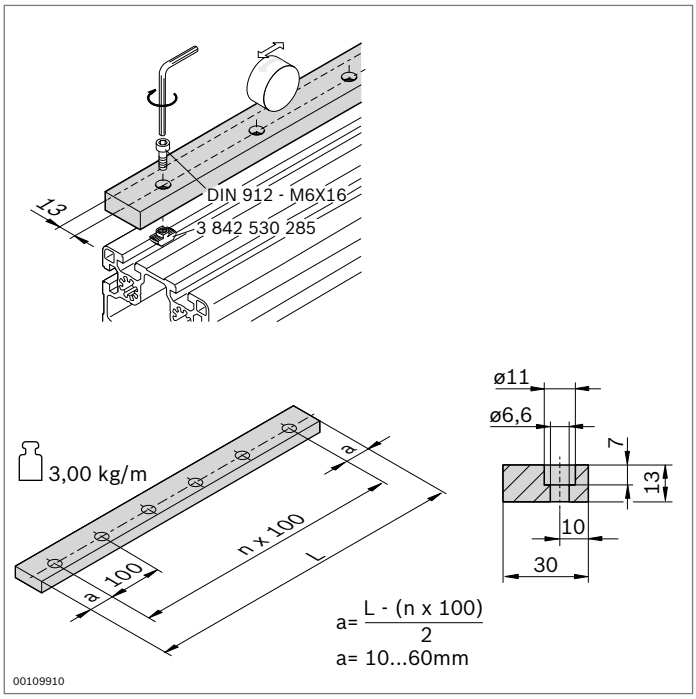

▶ Guide rail to hold supporting bearings

Guide rail	**L** (mm)	**No.**
LF12	120 ... 2000	**3 842 994 702/L**

Material:	Steel, hardened, polished
Condition on delivery:	Ungreased; greasing according to assembly instructions **3 842 527 226**
Accessories:	Cylinder bolt DIN 912 – M6x16 T-nut M6, 10 mm slot (**3 842 530 285)**

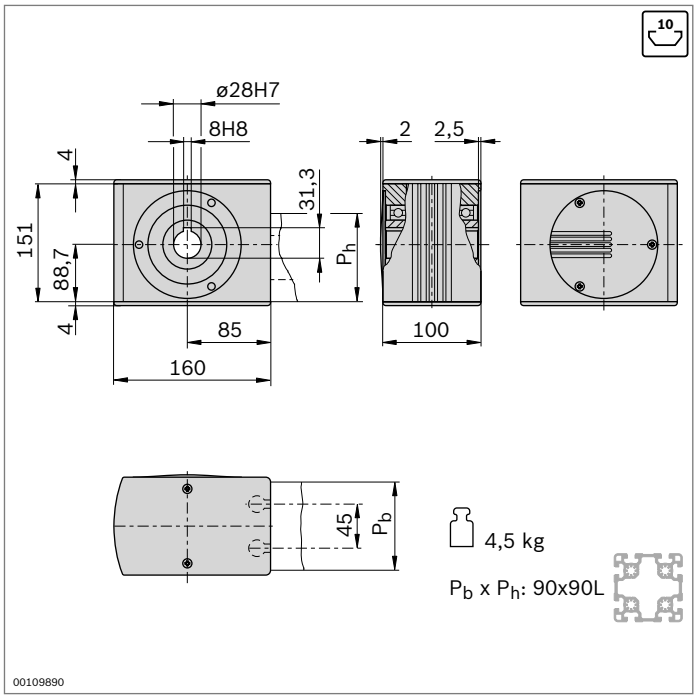

- Drive head for transferring drive torque to a toothed belt
- For direct mounting of a motor or (in conjunction with a center shaft) for mounting a hollow shaft gear or a coupling (p. 13-46)
- Mounted directly on profile by using longitudinal end connector (connector included in scope of delivery)
- Profile machining: LF blind hole drilling for longitudinal end connector

Drive head	No.	FS
LF12S	**3 842 526 412**	2xFS3, 2xFS4

Material:	Drive head aluminum, anodized Cover caps: PA, black Hollow shaft: steel; galvanized
Scope of delivery:	Incl. fastening material (FS), cover caps

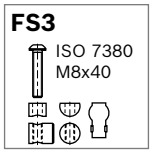

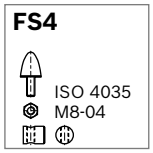

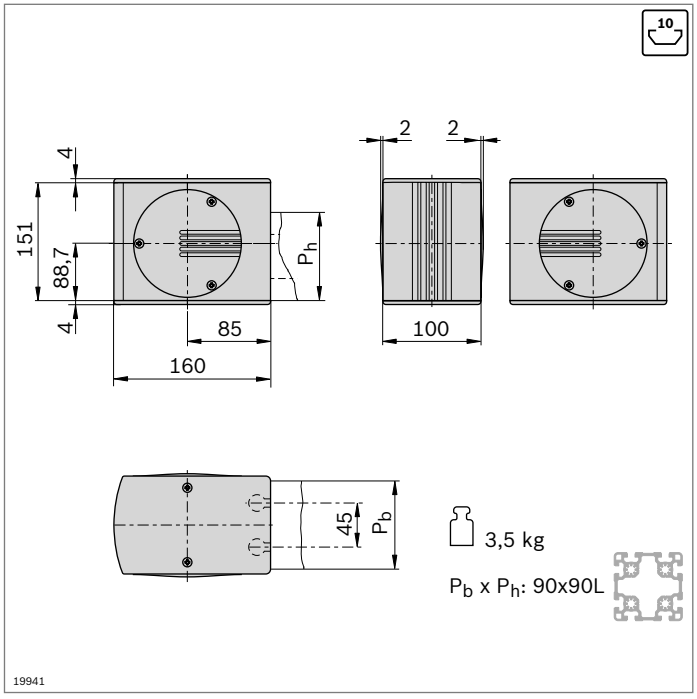

- Return head for tensioning the toothed belt and changing its direction
- Mounted directly on profile by using longitudinal end connector (connector included in scope of delivery)
- Profile machining: LF blind hole drilling for longitudinal end connector

Return head	No.	FS
LF12S	**3 842 526 413**	2xFS3, 2xFS4

Material:	Aluminum, anodized Hollow shaft: steel; galvanized Cover caps: PA, black
Scope of delivery:	Incl. fastening material (FS), cover caps

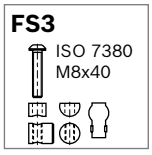

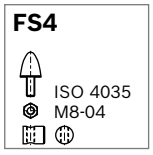

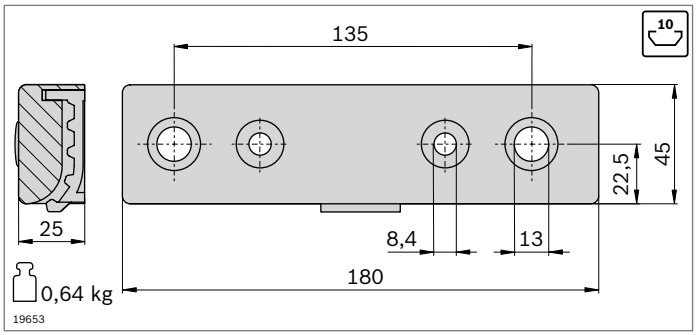

- Belt connector suitable for trolley built out of strut profiles 45x180
- All connecting parts included for mounting on the profile end (LF12S) or in the slot (LF12C)
- Profile finishing for strut profile 45x180 for trolley LF12S: M12

Belt connector		No.	FS
LF12	2	**3 842 535 680**	2xFS5, 2xFS6, 2xFS7, 2xFS8, 4xFS9

Material: Aluminum, painted black
Scope of delivery: Incl. fastening material (FS)

FS5
DIN7984 M12x40

FS6
DIN 7984 M8x30
DIN 125 A8,4
10

FS7
DIN 7991 M8x30
10

FS8
ø18x7

FS9
ø10xø5x11

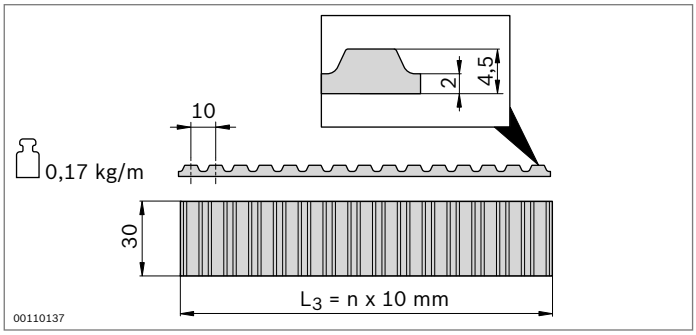

- Toothed belt as a trolley drive
- Pitch: AT10

Toothed belt	L_3 (mm)	No.
LF12	300 ... 50000	**3 842 994 821 / L_3** [1]
	50000	**3 842 526 422**

[1] $L_3 = 2xL_2 - L_1 + 630$
Material: PU with embedded steel wires

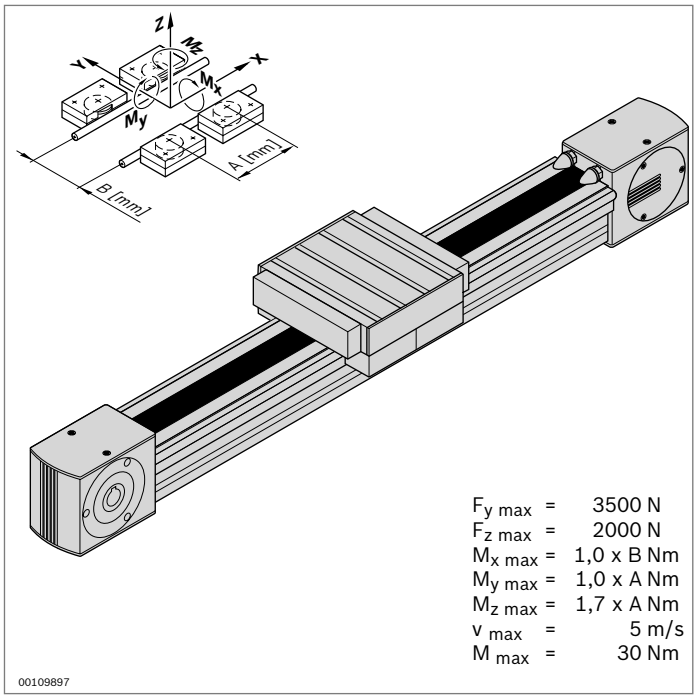

Cam roller guide LF12C – complete axis

- Fully assembled cam roller guide
- Stroke can be individually selected
- Clamping profile clipped into strut profile 90x90
- Incl. toothed belt drive; additional notes on the drive concept (p. 13-44)

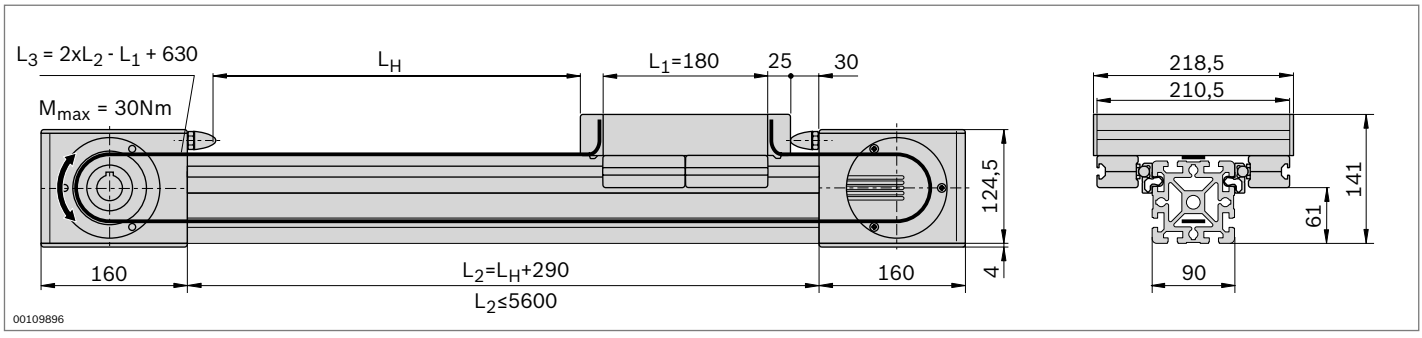

Technical data

See pages 13-50for notes on layout and drive

Complete axis	L_H (mm)	No.
LF12C	50 ... 5310	**3 842 998 498 / L_H**

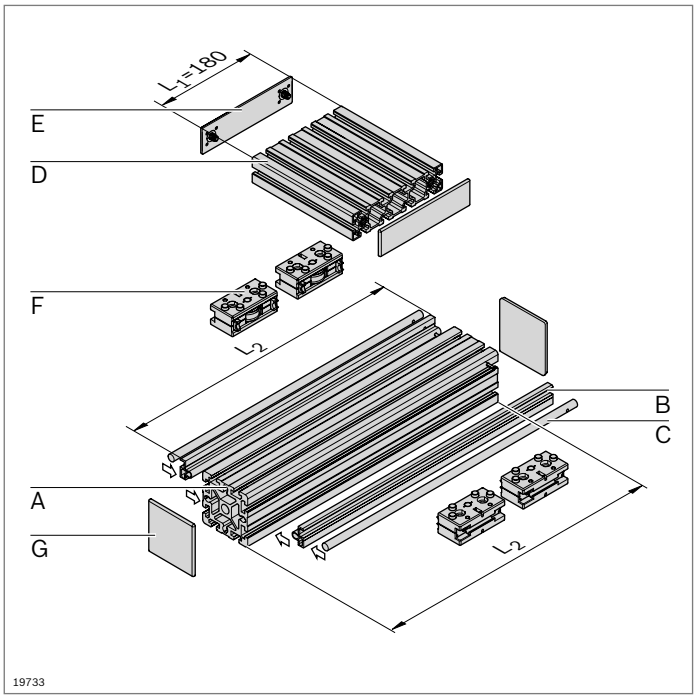

Cam roller guide LF12C – components

- Components for the individual assembly of cam roller guides, with or without drive

Parts list for cam roller guide LF12C without drive

Component		No.	Qty.	Page
A	Profile 90x90	**3 842 990 500 / L_2**	1	2-44
B	Clamping profile LF12C	**3 842 992 440 / L_2**	2	13-25
C	Guide rod LF12	**3 842 993 968 / L_2**	2	13-25
D	Profile 45x180	**3 842 990 335 / 210.5 mm**	1	2-41
E	Cover cap 45x180	**3 842 548 795**	2	2-41
F	Guide bearing LF12	**3 842 535 664**	4	13-26
G	Cover cap 90x90	**3 842 548 761**	2	2-44

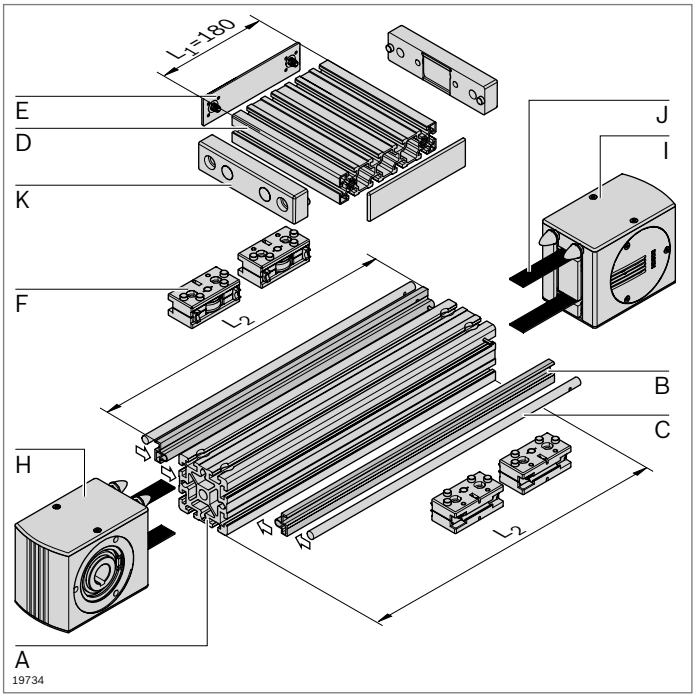

Parts list for cam roller guide LF12C with drive

Component		No.	Qty.	Page
A	Profile 90x90 LF LF	**3 842 993 082 / L_2**	1	2-44
B	Clamping profile LF12C	**3 842 992 440 / L_2**	2	13-25
C	Guide rod LF12	**3 842 993 968 / L_2**	2	13-25
D	Profile 45x180	**3 842 990 335 / 210.5 mm**	1	2-41
E	Cover cap 45x180	**3 842 548 795**	2	2-41
F	Guide bearing LF12	**3 842 535 664**	4	13-26
H	Drive head LF12C	**3 842 526 863**	1	13-28
I	Return head LF12C	**3 842 526 865**	1	13-28
J	Toothed belt LF12	**3 842 994 821 / L_3**[1)]	1	13-29
K	Belt connector LF12	**3 842 535 680**	2	13-29

[1)] $L_3 = 2xL_2 - L_1 + 630$

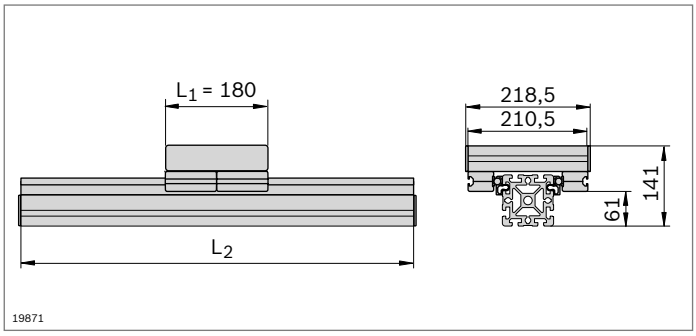

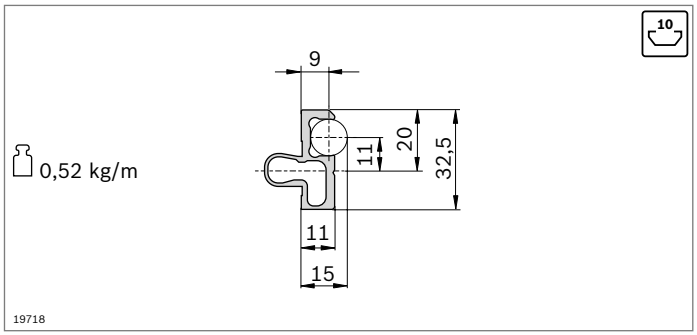

- The clamping profile is clipped into any chosen strut profile with a 10 mm slot and holds the guide rods

Clamping profile		L_2 (mm)	No.
LF12C	1 pc	150 ... 3000	**3 842 992 440 / L_2**
	20 pcs	3000	**3 842 518 897**

Material: Aluminum, anodized

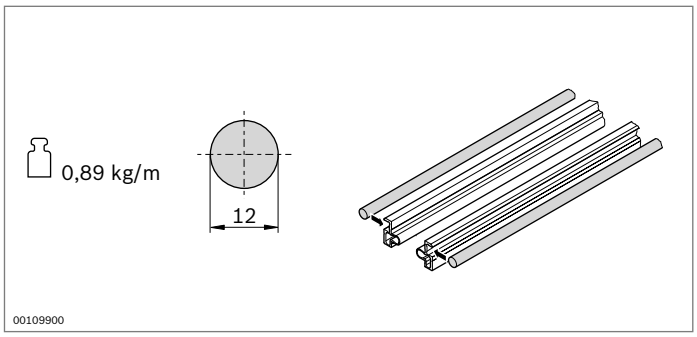

- The guide rod is pressed into the clamping profile
- The guide rod guides the guide bearing

Guide rod	L_2 (mm)		No.
LF12	150 ... 2900	1	**3 842 993 968 / L_2**
	2900	20	**3 842 539 415**

Material: Solid shaft VA, induction hardened and polished
Condition on delivery: Ungreased; greasing according to assembly instructions **3 842 527 226**

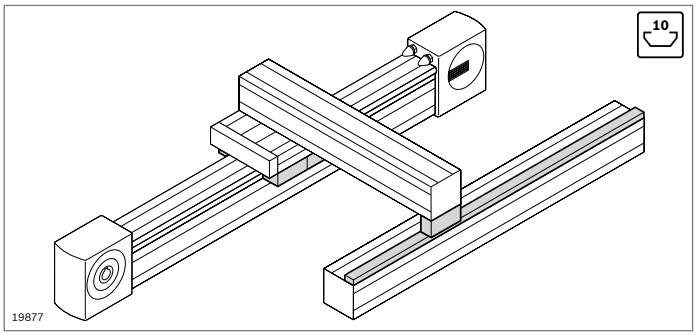

- Guide bearing for trolley construction
- Supporting bearing for brackets for bearing off-center forces
- Guide rail to support supporting bearings (p. 13-27)

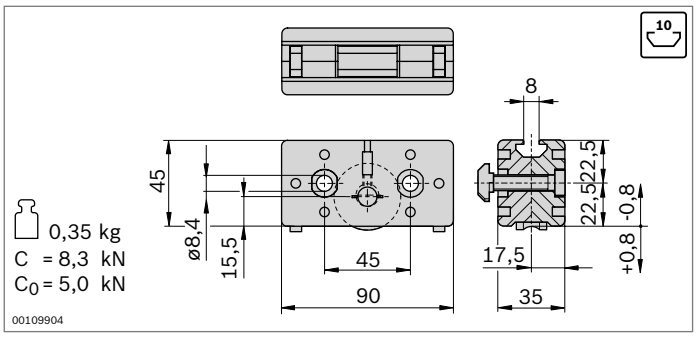

- Guide bearing for trolley construction
- Guiding via guide rod
- Rollers with ball bearings, permanently lubricated
- Lubricating felts with guide rod lubrication reservoir
- Play-free roller adjustment via eccentric bolts
- Replacement of the lubricating felts possible from rear in installed state

FS1

DIN 7984
M8x40
10

Guide bearing		No.	FS
LF12	2	**3 842 535 664**	2xFS1

Material:	Guide bearing die-cast aluminum Roller: steel, hardened, polished
Scope of delivery:	Incl. fastening material (FS)
Condition on delivery:	Lubricating felts ungreased; greasing according to assembly instructions **3 842 527 226**

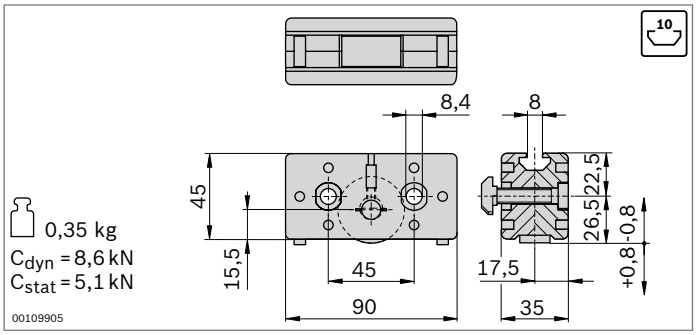

- Supporting bearing for brackets for bearing off-center forces
- For support on the guide rail
- Rollers with ball bearings, permanently lubricated
- Lubricating felts with guide rod lubrication reservoir
- Play-free roller adjustment via eccentric bolts
- Replacement of the lubricating felts possible from rear in installed state

FS1

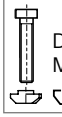

DIN 7984
M8x40
10

Supporting bearing		No.	FS
LF12	2	**3 842 535 666**	2xFS1

Material:	Guide bearing die-cast aluminum Roller: steel, hardened, polished
Scope of delivery:	Incl. fastening material (FS)
Condition on delivery:	Lubricating felts ungreased; greasing according to assembly instructions **3 842 527 226**

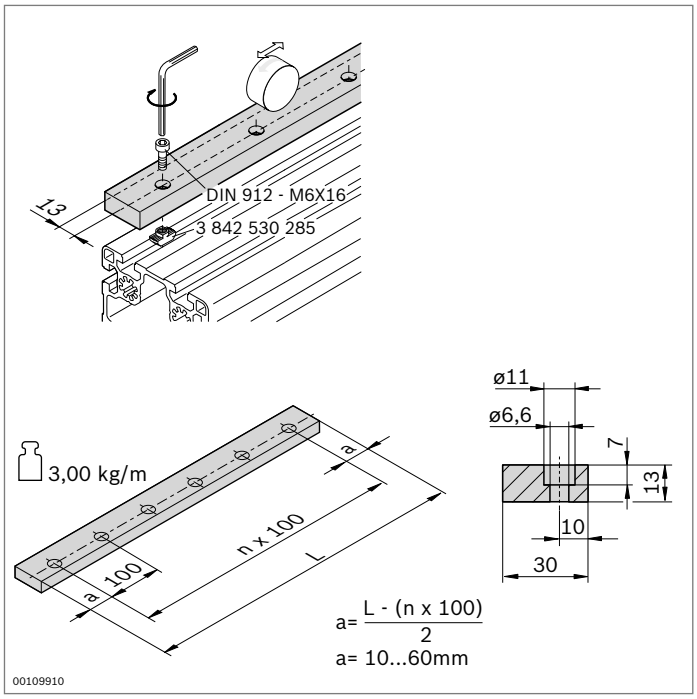

▶ Guide rail to hold supporting bearings

Guide rail	**L** (mm)	**No.**
LF12	120 ... 2000	**3 842 994 702 / L**

Material:	Steel, hardened, polished
Condition on delivery:	Ungreased; greasing according to assembly instructions **3 842 527 226**
Accessories:	Cylinder bolt DIN 912 – M6x16 T-nut M6, 10 mm slot (**3 842 530 285**)

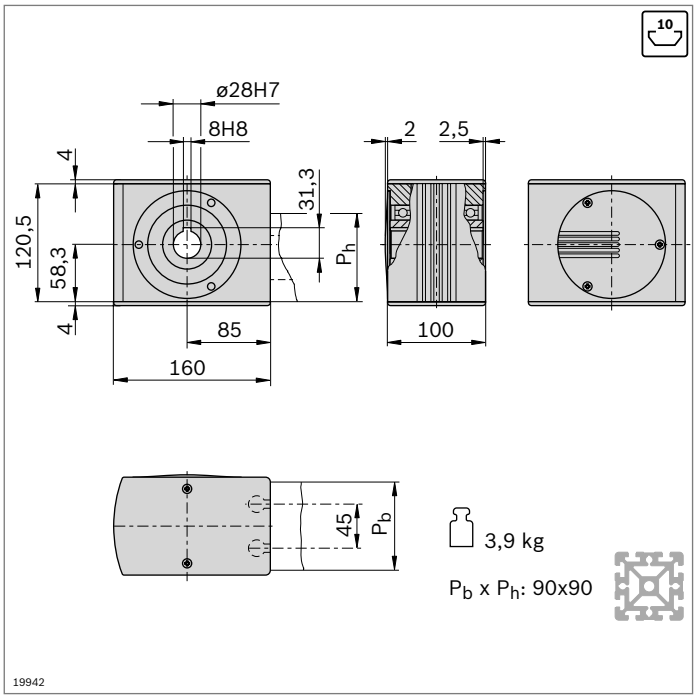

- Drive head for transferring drive torque to a toothed belt
- For direct mounting of a motor or (in conjunction with a center shaft) for mounting a hollow shaft gear or a coupling (p. 13-46)
- Mounted directly on profile by using longitudinal end connector (connector included in scope of delivery)
- Profile machining: LF blind hole drilling for longitudinal end connector

Drive head	No.	FS
LF12C	**3 842 526 863**	4xFS2, 2xFS3

Material:	Drive head aluminum, anodized Hollow shaft: steel; galvanized Cover caps: PA, black
Scope of delivery:	Incl. fastening material (FS), cover caps

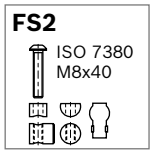

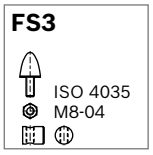

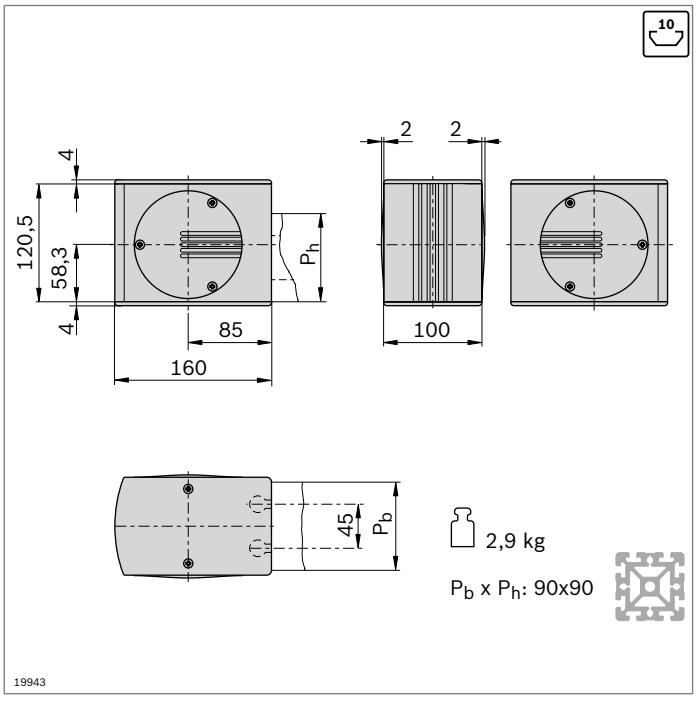

- Return head for tensioning the toothed belt and changing its direction
- Mounted directly on profile by using longitudinal end connector (connector included in scope of delivery)
- Profile machining: LF blind hole drilling for longitudinal end connector

Return head	No.	FS
LF12C	**3 842 526 865**	4xFS2, 2xFS3

Material:	Return head: aluminum, anodized Hollow shaft: steel; galvanized Cover caps: PA, black
Scope of delivery:	Incl. fastening material (FS), cover caps

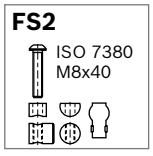

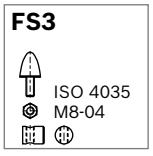

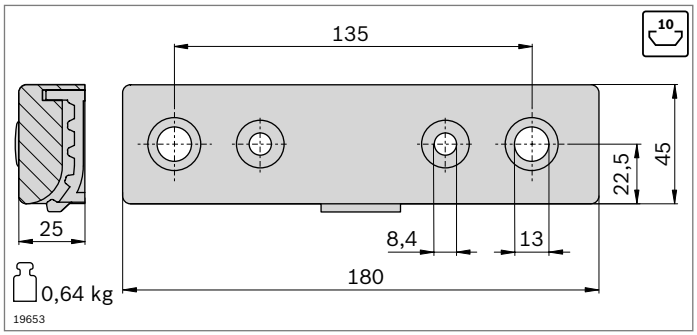

- Belt connector suitable for trolley built out of strut profiles 45x180
- All connecting parts included for mounting at the profile end (LF12S) or the slot (LF12C)
- Profile finishing for strut profile 45x180 for trolley LF12S: M12

Belt connector		No.	FS
LF12	2	**3 842 535 680**	2xFS4, 2xFS5, 2xFS6, 2xFS7, 4xFS8

Material: Aluminum, painted black
Scope of delivery: Incl. fastening material (FS)

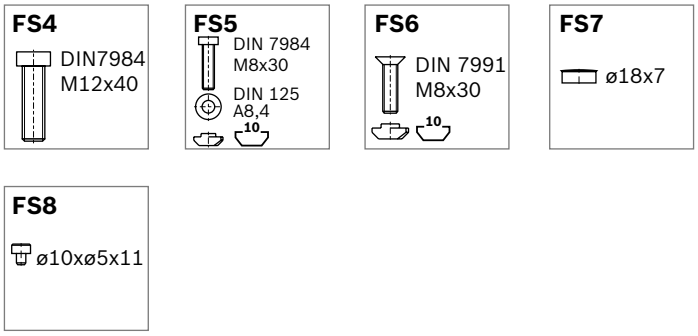

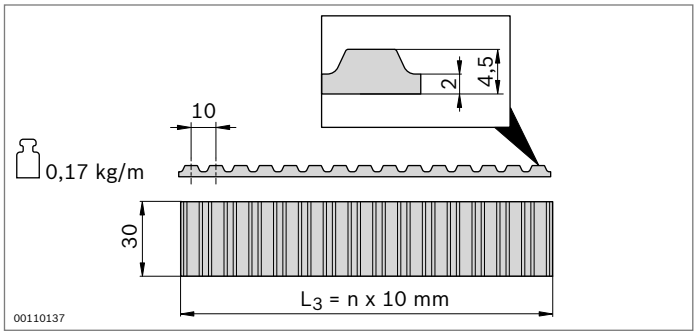

- Toothed belt as a trolley drive
- Pitch: AT10

Toothed belt	L_3 (mm)	No.
LF12	300 ... 50000	**3 842 994 821 / L_3** [1]
	50000	**3 842 526 422**

[1] $L_3 = 2xL_2 - L_1 + 630$
Material: PU with embedded steel wires

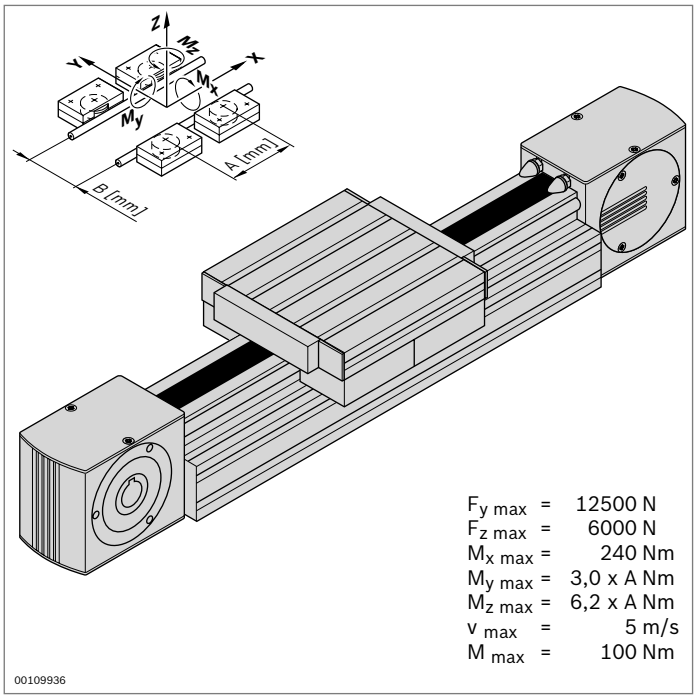

Cam roller guide LF20S – complete axis

- Fully assembled cam roller guide
- Stroke and trolley length can be individually selected
- Rail profile mounted on strut profile 90x180
- Incl. toothed belt drive; additional notes on the drive concept (p. 13-44)

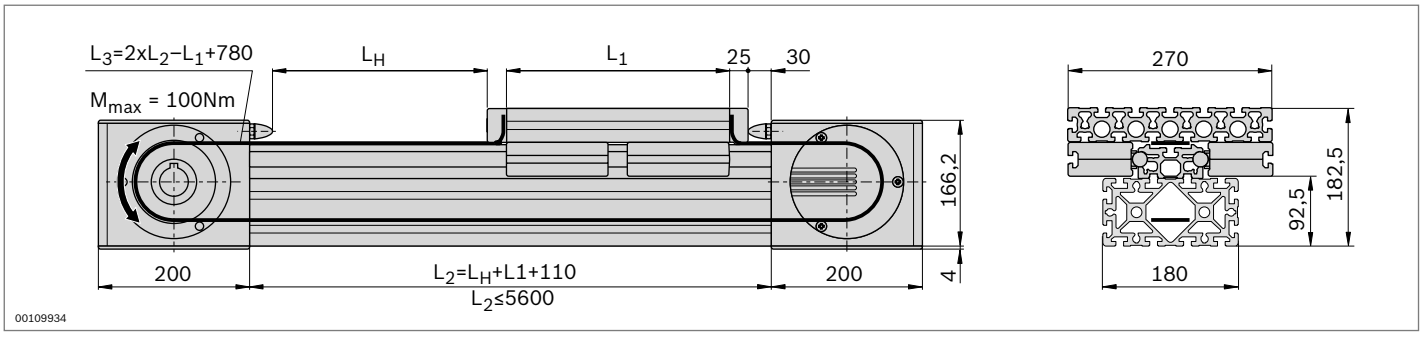

Technical data

See pages 13-57 for notes on layout and drive

Complete axis	L_H / L_1 (mm)	No.
LF20S	$L_1+50 \leq L_H \leq 5220$ $270 \leq L_1 \leq 1000$	**3 842 998 499 / L_H / L_1**

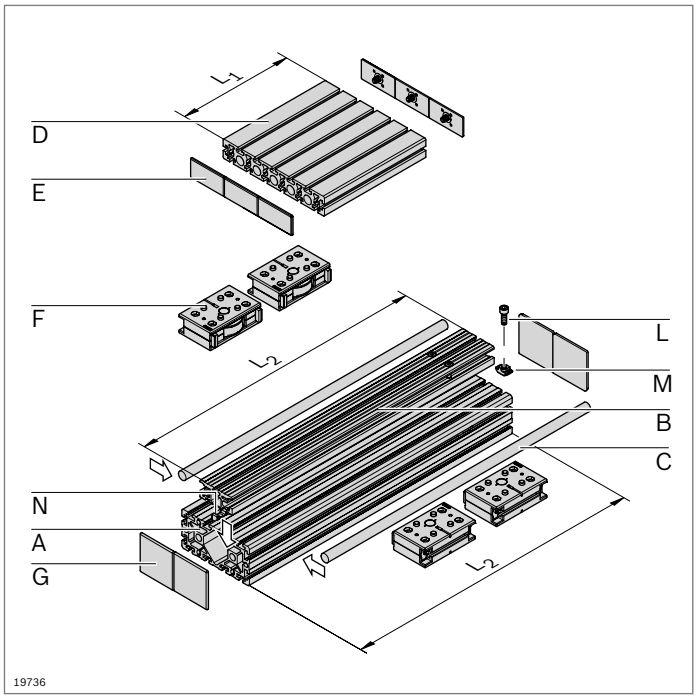

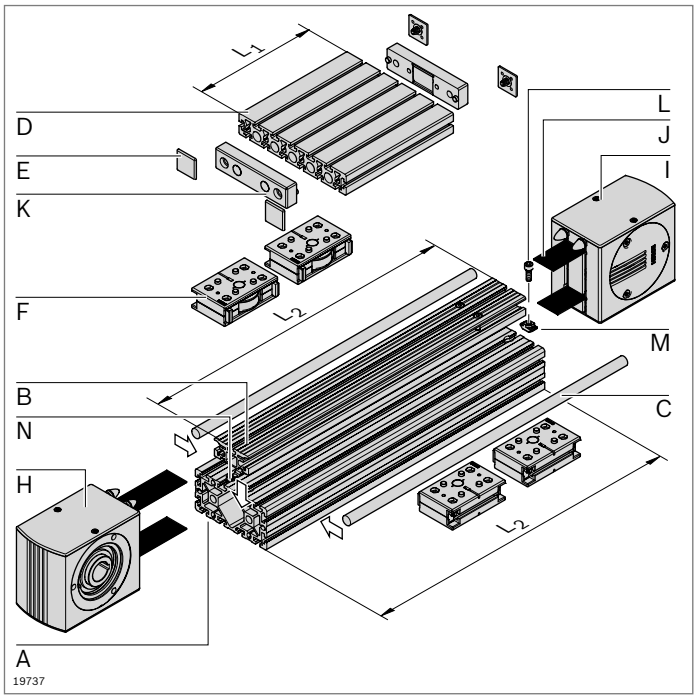

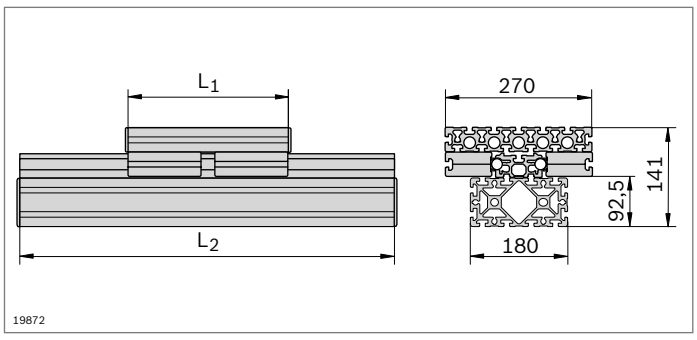

Cam roller guide LF20S – components

- Components for the individual assembly of cam roller guides, with or without drive

Parts list for cam roller guide LF20S without drive

Component		No.	Qty.	Page
A	Profile 90x180	**3 842 990 416 / L_2**	1	2-45
B	Guide profile LF20S	**3 842 993 080 / L_2**	1	13-32
C	Guide rod LF20	**3 842 993 969 / L_2**	2	13-32
D	Profile 45x270	**3 842 992 927 / L_1**	1	2-42
E	Cover cap 45x90	**3 842 548 757**	6	2-42
F	Guide bearing LF20	**3 842 535 663**	4	13-33
G	Cover cap 90x90	**3 842 548 761**	4	2-44
L	Cylinder bolt DIN 7984 – M8x45		n[1)]	
M	T-nut M8, 10 mm slot	**3 842 530 287**	n[1)]	3-4
N	Sliding block	**3 842 146 877**	n[1)]	13-32

[1)] For identification see page 13-32

Parts list for cam roller guide LF20S with drive

Component		No.	Qty.	Page
A	Profile 90x180 LF-S LF-S	**3 842 993 081 / L_2**	1	2-45
B	Guide profile LF20S	**3 842 993 080 / L_2**	1	13-32
C	Guide rod LF20	**3 842 993 969 / L_2**	2	13-32
D	Profile 45x270 M12 M12	**3 842 992 928 / L_1**	1	2-42
E	Cover cap 45x45	**3 842 548 753**	4	2-38
F	Guide bearing LF20	**3 842 535 663**	4	13-33
H	Drive head LF20S	**3 842 526 414**	1	13-35
I	Return head LF20S	**3 842 526 415**	1	13-35
J	Toothed belt LF20	**3 842 994 662 / L_3[1)]**	1	13-36
K	Belt connector LF20	**3 842 535 680**	2	13-36
L	Cylinder bolt DIN 7984 – M8x45		n[2)]	
M	T-nut M8, 10 mm slot	**3 842 530 287**	n[2)]	3-4
N	Sliding block	**3 842 146 877**	n[2)]	13-32

[1)] $L_3 = 2xL_2 - L_1 + 780$

[2)] For identification see page 13-32

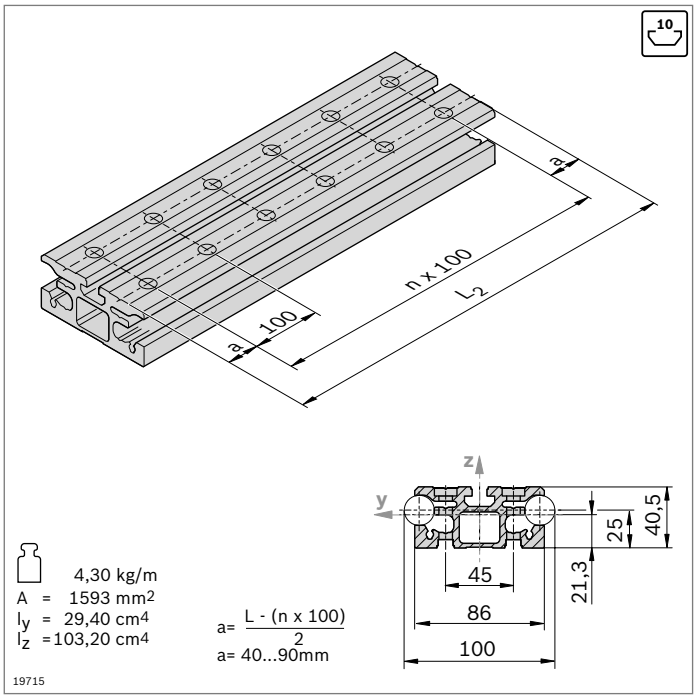

- Guide profile LF20S to hold guide rods
- Installation on MGE strut profiles with 10 mm slot or directly on a flat surface

Guide profile		L_2 (mm)	No.
LF20S	1 pc	150 ... 5600	**3 842 993 080 / L_2**
	5 pcs	5600	**3 842 526 878**

Accessories: Cylinder screw DIN 7984 – M8x45
T-nut M8, 10 mm slot (p. 3-4)
Sliding block

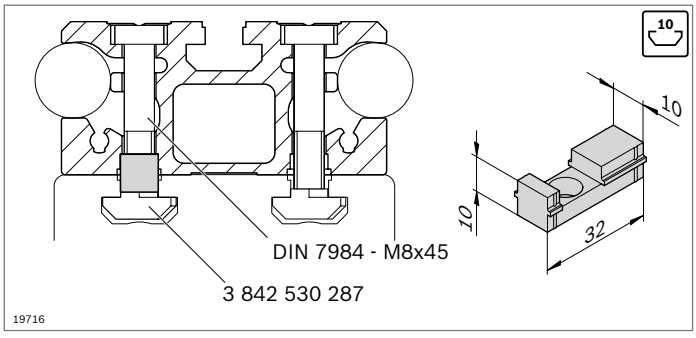

- Sliding block as a centering aid for mounting the guide profile in a 10 mm profile slot

Sliding block		No.
	50	**3 842 146 877**

Material: PA, black

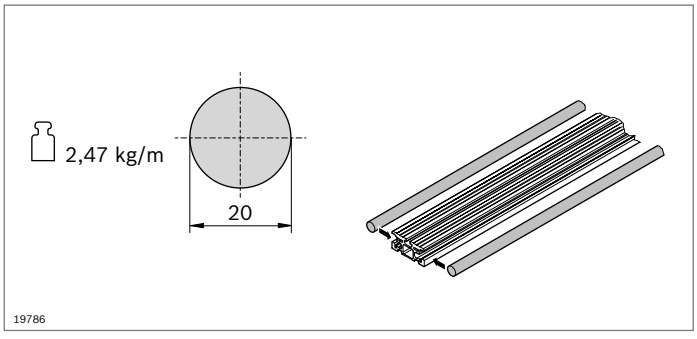

- The guide rod is pressed into the guide profile
- The guide rod guides the guide bearing

Guide rod	L_2 (mm)		No.
LF20	150 ... 2900	1	**3 842 993 969 / L_2**
	2900	20	**3 842 539 416**

Material: Solid shaft VA, induction hardened, polished
Condition on delivery: Ungreased; greasing according to assembly instructions **3 842 527 226**

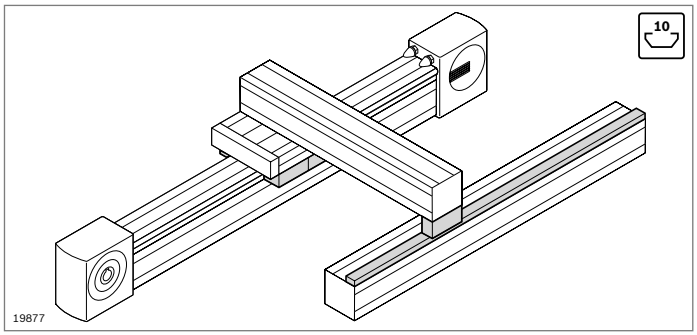

- Guide bearing for trolley construction
- Supporting bearing for brackets for bearing off-center forces
- Guide rail to support supporting bearings (p. 13-34)

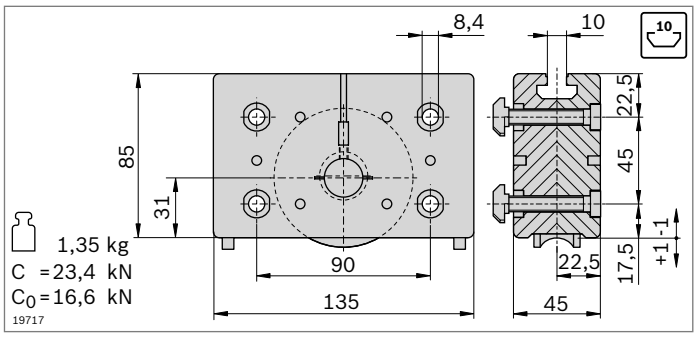

- Guide bearing for trolley construction
- Guiding via guide rod
- Rollers with ball bearings, permanently lubricated
- Lubricating felts with guide rod lubrication reservoir
- Play-free roller adjustment via eccentric bolts
- Replacement of the lubricating felts possible from rear in installed state

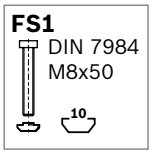

Guide bearing		No.	FS
LF20	2	**3 842 535 663**	4xFS1

Material:	Housing: die-cast aluminum Roller: steel, hardened, polished
Scope of delivery:	Incl. fastening material (FS)
Condition on delivery:	Lubricating felts ungreased; greasing according to assembly instructions **3 842 527 226**

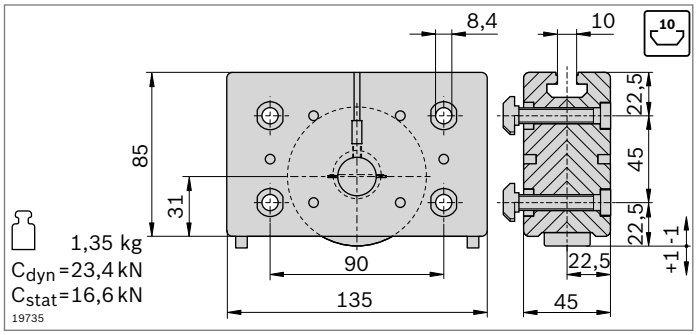

- Supporting bearing for brackets for bearing off-center forces
- For support on the guide rail
- Rollers with ball bearings, permanently lubricated
- Lubricating felts with guide rod lubrication reservoir
- Play-free roller adjustment via eccentric bolts
- Replacement of the lubricating felts possible from rear in installed state

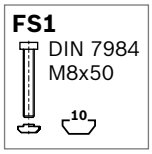

Supporting bearing		No.	FS
LF20	2	**3 842 535 665**	4xFS1

Material:	Housing: die-cast aluminum Roller: steel, hardened, polished
Scope of delivery:	Incl. fastening material (FS)
Condition on delivery:	Lubricating felts ungreased; greasing according to assembly instructions **3 842 527 226**

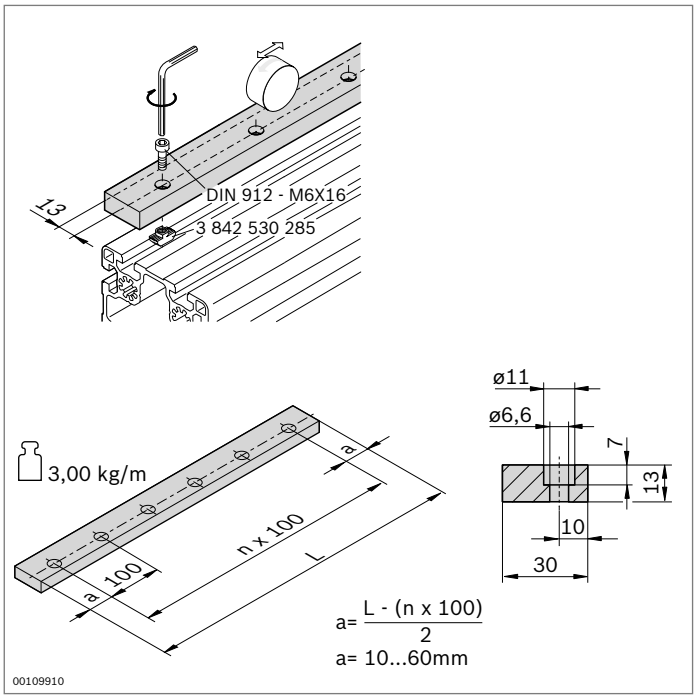

▶ Guide rail to hold supporting bearings

Guide rail	**L** (mm)	**No.**
LF20	120 ... 2000	**3 842 994 702 / L**
Material:	Steel, hardened, polished	
Condition on delivery:	Ungreased; greasing according to assembly instructions **3 842 527 226**	
Accessories:	Cylinder bolt DIN 912 – M6x16 T-nut M6, 10 mm slot (**3 842 530 285**)	

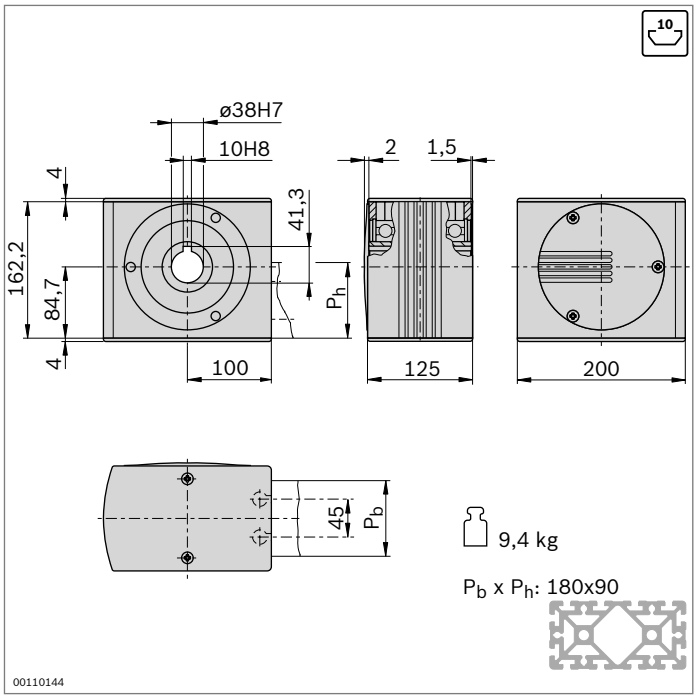

- Drive head for transferring drive torque to a toothed belt
- For direct mounting of a motor or (in conjunction with a center shaft) for mounting a hollow shaft gear or a coupling (p. 13-46)
- Mounted directly on profile by using longitudinal end connector (connector included in scope of delivery)
- Profile machining: LF-S blind hole drilling for longitudinal end connector

Drive head	No.	FS
LF20S	**3 842 526 414**	4xFS2, 2xFS3

Material: Drive head: aluminum, anodized
Hollow shaft: steel; galvanized
Scope of delivery: Incl. fastening material (FS), cover caps

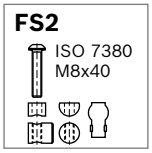

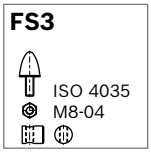

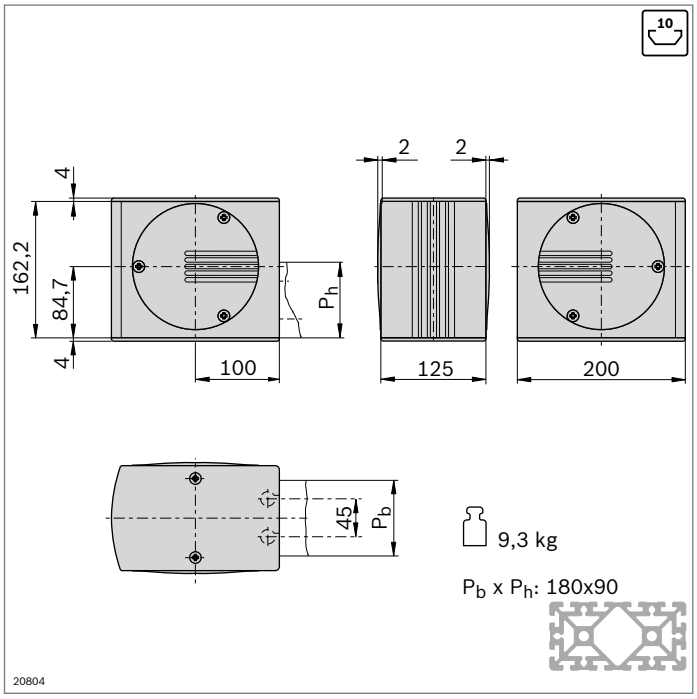

- Return head for tensioning the toothed belt and changing its direction
- Mounted directly on profile by using longitudinal end connector (connector included in scope of delivery)
- Profile machining: LF-S blind hole drilling for longitudinal end connector

Return head	No.	FS
LF20S	**3 842 526 415**	4xFS2, 2xFS3

Material: Return head: aluminum, anodized
Hollow shaft: steel; galvanized
Cover caps: PA, black
Scope of delivery: Incl. fastening material (FS), cover caps

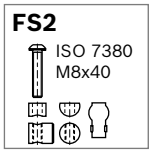

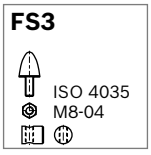

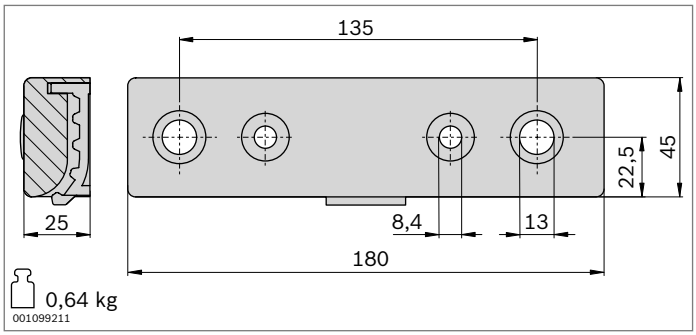

- Belt connector for fixing the toothed belt on the front of the trolley
- Profile finish for strut profile 45x270 for trolley LF20S: M12
- All connecting parts included for mounting at the profile end (LF20S) or the slot (LF20C)

Belt connector		No.	FS
LF20	2	**3 842 535 680**	2xFS4, 2xFS5, 2xFS6, 2xFS7, 4xFS8

Material: Aluminum, painted black
Scope of delivery: Incl. fastening material (FS)

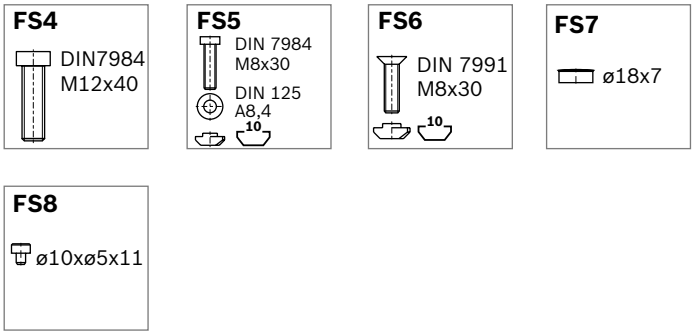

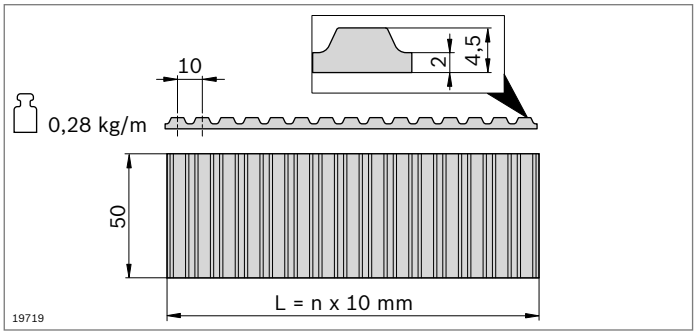

- Toothed belt as a trolley drive
- Pitch: AT10

Toothed belt	L_3 (mm)	No.
LF20	300 ... 50000	**3 842 994 662 / L_3**[1)]
	50000	**3 842 513 648**

[1)] $L_3 = 2xL_2 - L_1 + 780$
Material: PU with embedded steel wires

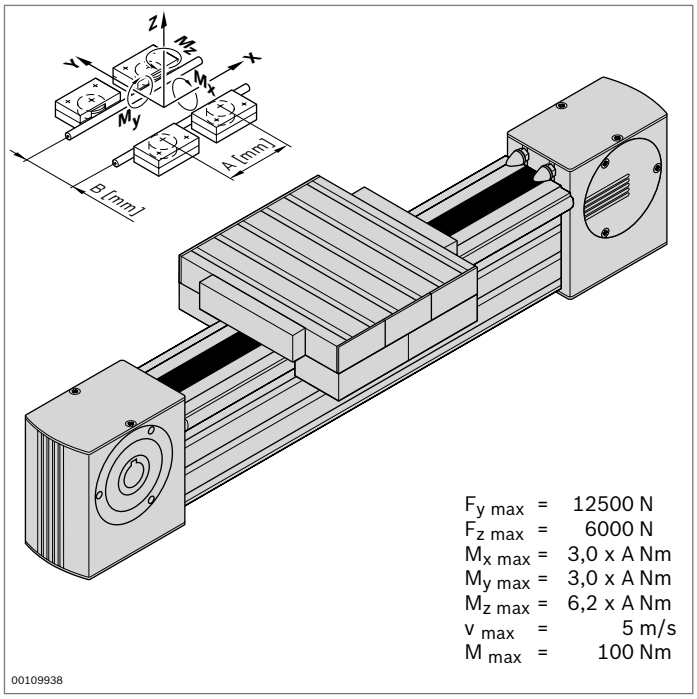

Cam roller guide LF20C – complete axis

10

- Fully assembled cam roller guide
- Stroke can be individually selected
- Clamping profile clipped into strut profile 90x180
- Incl. toothed belt drive; additional notes on the drive concept (p. 13-44)

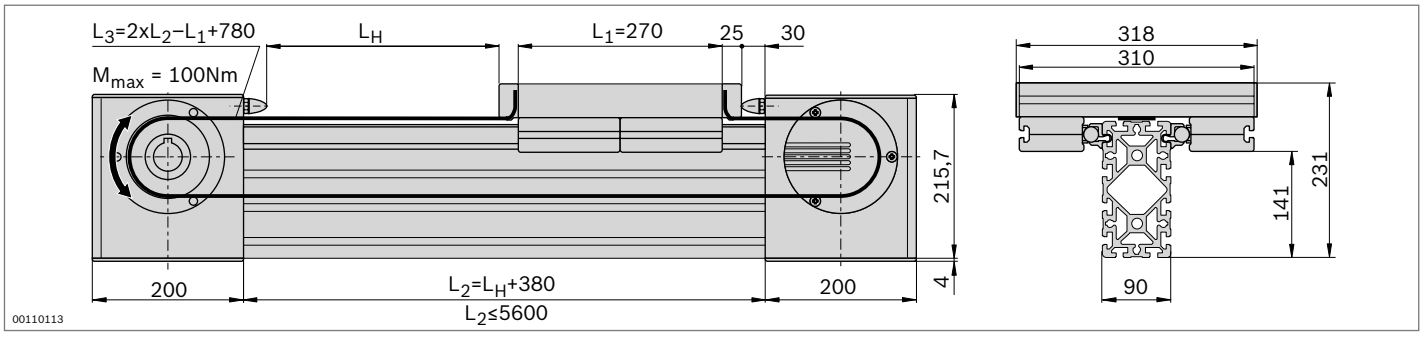

Technical data

See pages 13-50 for notes on layout and drive

Complete axis	L_H (mm)	No.
LF20C	50 ... 5220	**3 842 998 500 / L_H**

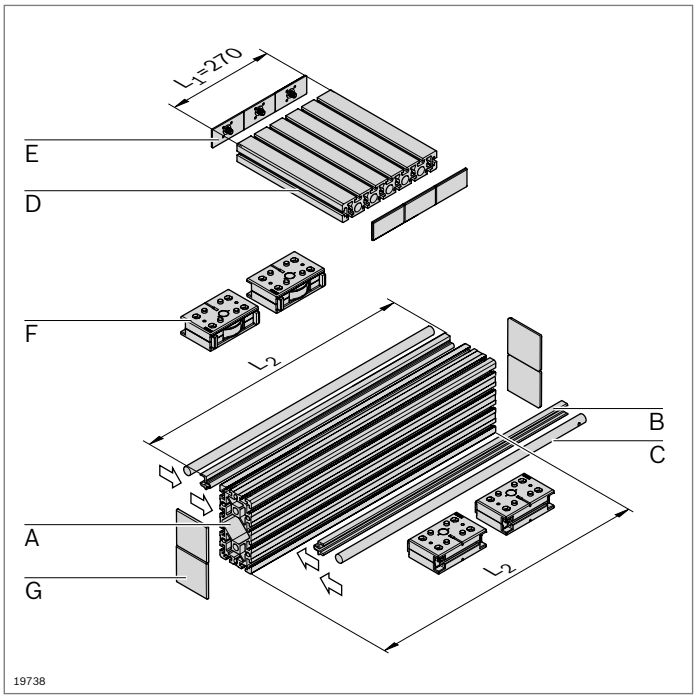

Cam roller guide LF20C – components

- Components for the individual assembly of cam roller guides, with or without drive

Parts list for cam roller guide LF20C without drive

Component		No.	Qty.	Page
A	Profile 90x180	**3 842 990 416 / L_2**	1	2-45
B	Clamping profile LF20C	**3 842 992 441 / L_2**	2	13-39
C	Guide rod LF20	**3 842 993 969 / L_2**	2	13-39
D	Profile 45x270	**3 842 992 927 / 310 mm**	1	2-42
E	Cover cap 45x90	**3 842 548 757**	6	2-41
F	Guide bearing LF20	**3 842 535 663**	4	13-40
G	Cover cap 90x90	**3 842 548 761**	4	2-44

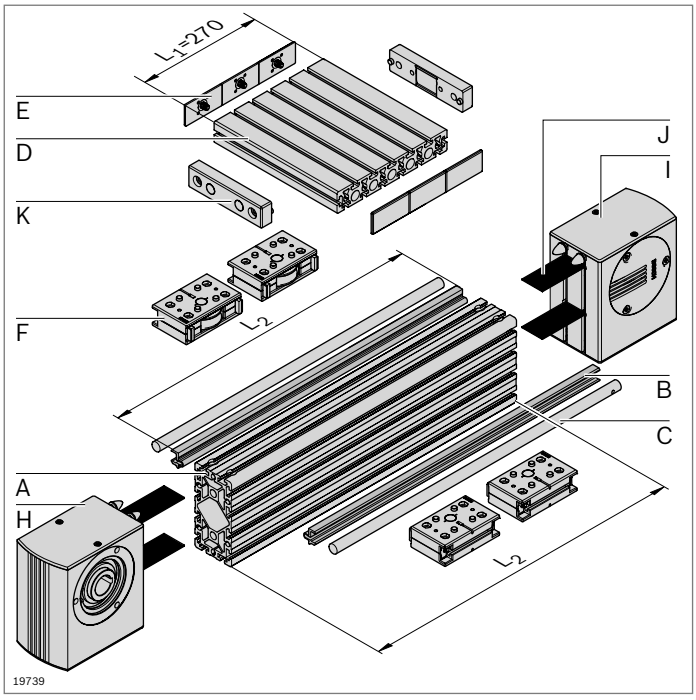

Parts list for cam roller guide LF20C with drive

Component		No.	Qty.	Page
A	Profile 90x180 LF LF	**3 842 992 898 / L_2**	1	2-45
B	Clamping profile LF20C	**3 842 992 441 / L_2**	2	13-39
C	Guide rod LF20	**3 842 993 969 / L_2**	2	13-39
D	Profile 45x270	**3 842 992 927 / 310 mm**	1	2-42
E	Cover cap 45x90	**3 842 548 757**	6	2-41
F	Guide bearing LF20	**3 842 535 663**	4	13-40
H	Drive head	**3 842 526 867**	1	13-42
I	Return head	**3 842 526 869**	1	13-42
J	Toothed belt	**3 842 994 662 / L_3 [1)]**	1	13-43
K	Belt connector	**3 842 535 680**	2	13-43

[1)] $L_3 = 2xL_2 - L_1 + 780$

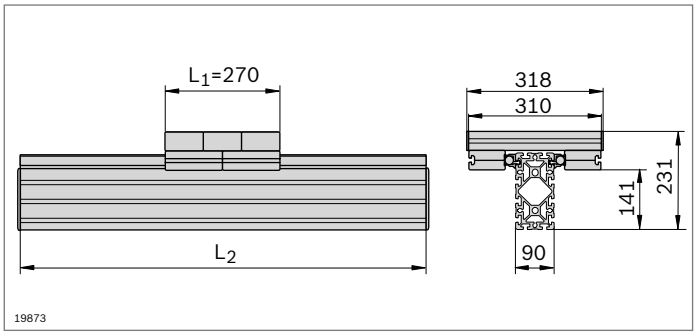

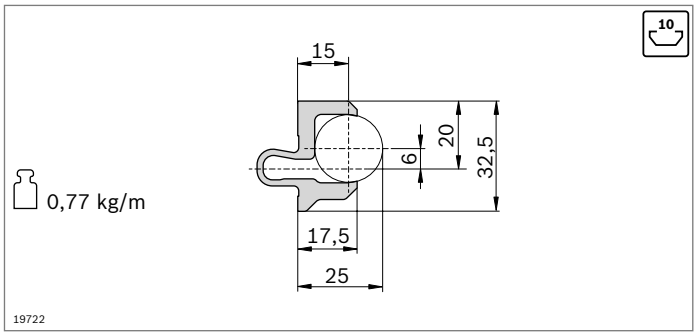

- The clamping profile is clipped into any chosen 10 mm strut profile slot and holds the guide rods

Clamping profile		L (mm)	No.
LF20C	1 pc	150 ... 3000	**3 842 992 441 / L**
	20 pcs	3000	**3 842 518 898**
Material:	Aluminum, anodized		

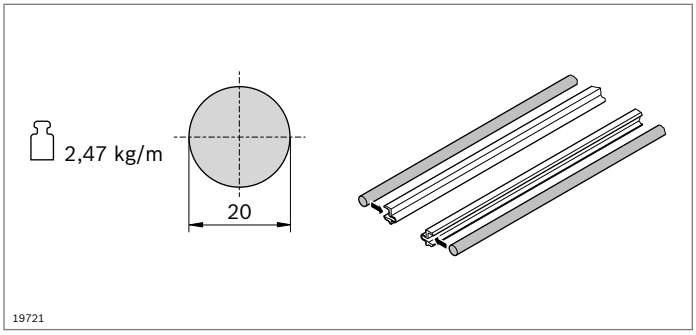

- The guide rod is pressed into the clamping profile
- The guide rod guides the guide bearing

Guide rod	L (mm)		No.
LF20	150 ... 2900	1	**3 842 993 969 / L**
	2900	20	**3 842 539 416**
Material:	Solid shaft VA, induction hardened, polished		
Condition on delivery:	Ungreased; greasing according to assembly instructions **3 842 527 226**		

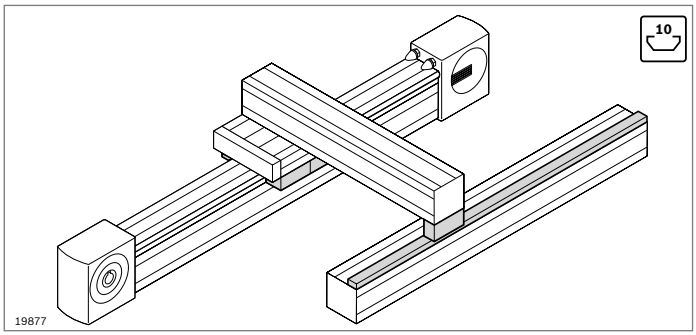

- Guide bearing for trolley construction
- Supporting bearing for brackets for bearing off-center forces
- Guide rail to support supporting bearings (p. 13-44)

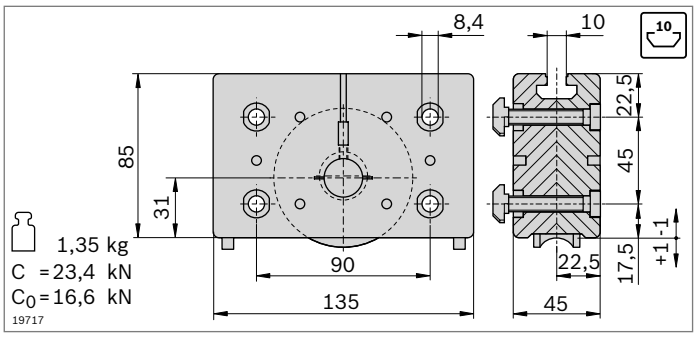

- Guide bearing for trolley construction
- Guiding via guide rod
- Rollers with ball bearings, permanently lubricated
- Lubricating felts with guide rod lubrication reservoir
- Play-free roller adjustment via eccentric bolts
- Replacement of the lubricating felts possible from rear in installed state

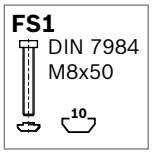

Guide bearing		No.	FS
LF20	2	**3 842 535 663**	4xFS1

Material:	Housing: die-cast aluminum Roller: steel, hardened, polished
Scope of delivery:	Incl. fastening material (FS)
Condition on delivery:	Lubricating felts ungreased; greasing according to assembly instructions **3 842 527 226**

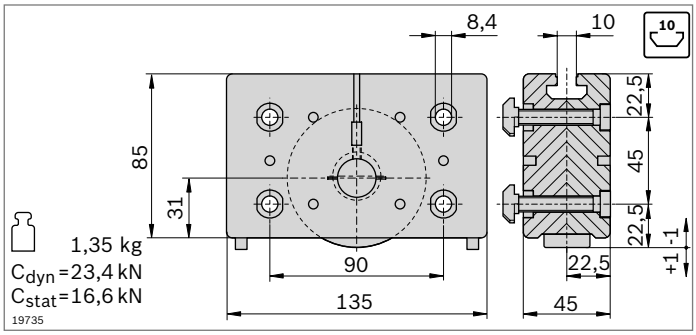

- Supporting bearing for brackets for bearing off-center forces
- For support on the guide rail
- Rollers with ball bearings, permanently lubricated
- Lubricating felts with guide rod lubrication reservoir
- Play-free roller adjustment via eccentric bolts
- Replacement of the lubricating felts possible from rear in installed state

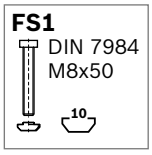

Supporting bearing		No.	FS
LF20	2	**3 842 535 665**	4xFS1

Material:	Housing: die-cast aluminum Roller: steel, hardened, polished
Scope of delivery:	Incl. fastening material (FS)
Condition on delivery:	Lubricating felts ungreased; greasing according to assembly instructions **3 842 527 226**

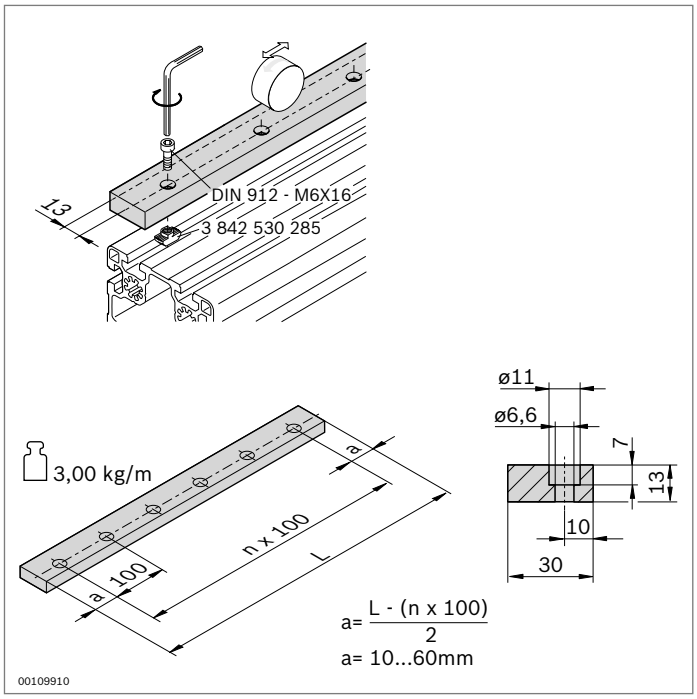

▶ Guide rail to hold supporting bearings

Guide rail	**L** (mm)	**No.**
LF20	120 ... 2000	**3 842 994 702 / L**
Material:	Steel, hardened, polished	
Accessories:	Cylinder bolt DIN 912 – M6x16 T-nut M6, 10 mm slot (**3 842 530 285**)	
Condition on delivery:	Ungreased; greasing according to assembly instructions **3 842 527 226**	

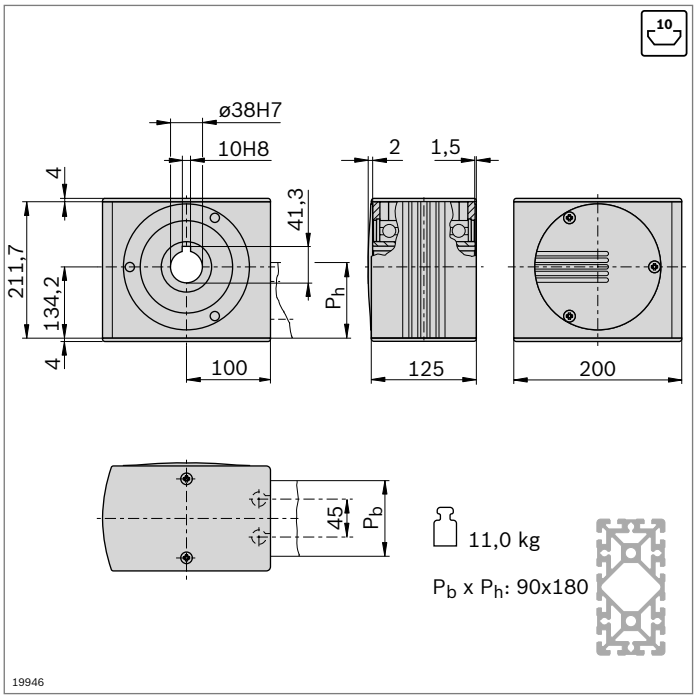

- Drive head for transferring drive torque to a toothed belt
- For direct mounting of a motor or (in conjunction with a center shaft) for mounting a hollow shaft gear or a coupling (p. 13-46)
- Mounted directly on profile by using longitudinal end connector (connector included in scope of delivery)
- Profile machining: LF blind hole drilling for longitudinal end connector

Drive head	No.	FS
LF20C	**3 842 526 867**	4xFS2, 2xFS3

Material:	Drive head: aluminum, anodized Hollow shaft: steel; galvanized
Scope of delivery:	Incl. fastening material (FS), cover caps

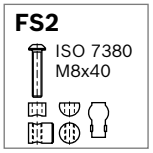

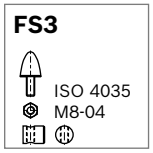

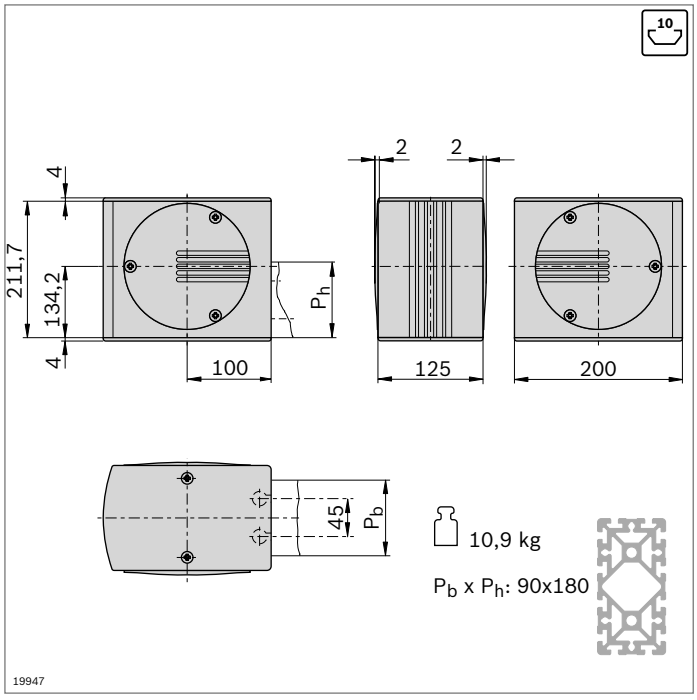

- Return head for tensioning the toothed belt and changing its direction
- Mounted directly on profile by using longitudinal end connector (connector included in scope of delivery)
- Profile machining: LF blind hole drilling for longitudinal end connector

Return head	No.	FS
LF20C	**3 842 526 869**	4xFS2, 2xFS3

Material:	Return head: aluminum, anodized Hollow shaft: steel; galvanized Cover caps: PA, black
Scope of delivery:	Incl. fastening material (FS), cover caps

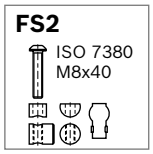

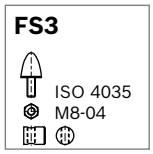

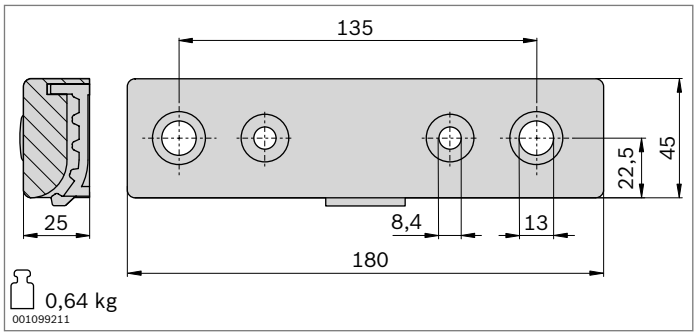

- Belt connector for fastening the toothed belt to the trolley slot
- Profile finish for strut profile 45x270 for trolley LF20S: M12
- All connecting parts included for mounting at the profile end (LF20S) or the slot (LF20C)

Belt connector		No.	FS
LF20	2	**3 842 535 680**	2xFS4, 2xFS5, 2xFS6, 2xFS7, 4xFS8

Material: Aluminum, painted black
Scope of delivery: Incl. fastening material (FS)

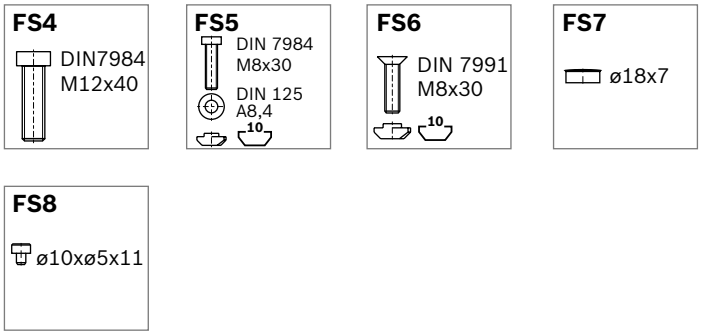

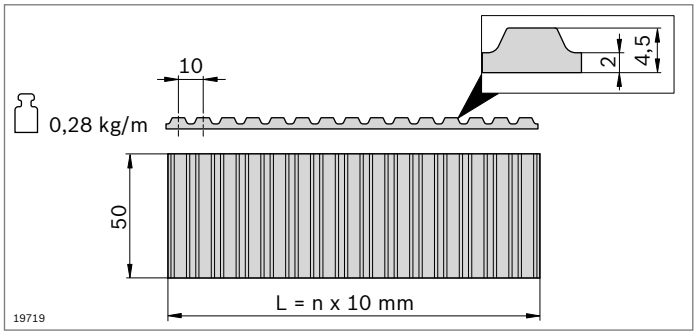

- Toothed belt as a trolley drive
- Pitch: AT10

Toothed belt	L (mm)	No.
LF20	300 ... 50000	**3 842 994 662 / L_3 [1)]**
	50000	**3 842 513 648**

[1)] $L_3 = 2xL_2 - L_1 + 780$
Material: PU with embedded steel wires

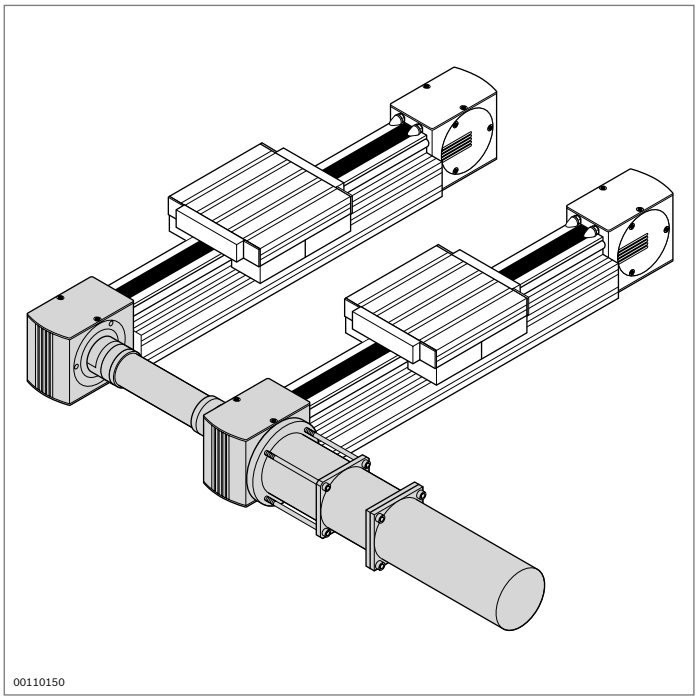

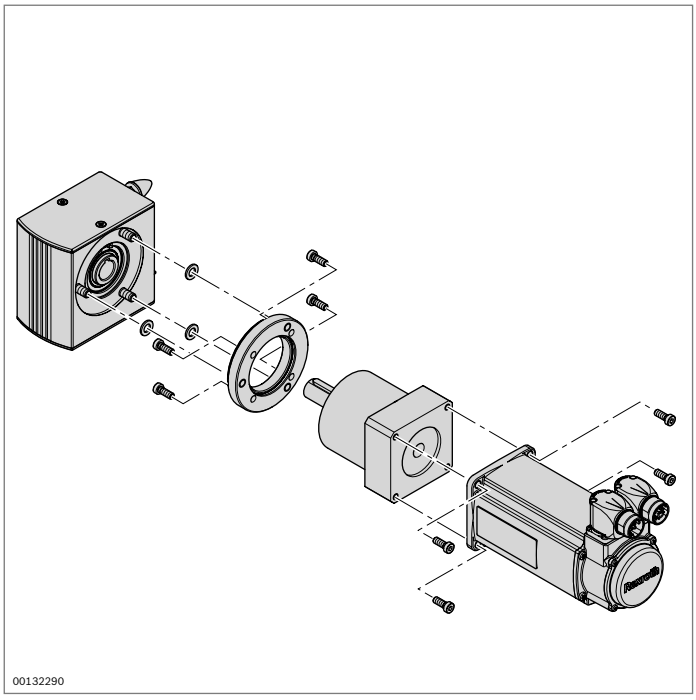

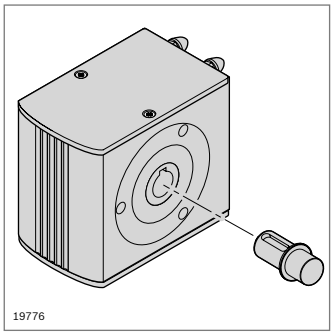

Linear guide drives

Drive concept
The linear guides are driven via the hollow shaft in the drive head. The drive head is used to directly install a motor or alternatively (in connection with a center shaft) a hollow shaft gear or a coupling. Depending on the desired speeds of movement for the application, it is necessary to use various motor types in conjunction with intermediate gears. Due to the multitude of drive components available in the market, there are a large number of possible combinations.

The MGE modular profile system makes it easy to assemble Bosch Rexroth linear guides through the use of a standard shaft and simple connection dimensions.

Fastening
The drive head is directly secured on the profile by means of longitudinal end connectors.
The motor, or the intermediate gear flange, can be screwed to the drive head as a complete unit from the left- or right-hand side.

Synchronous shafts
The use of synchronous shafts (p. 13-47) enables several linear axes to be operated with one drive.

Connection dimensions (flange)
The connection dimensions for the size LF6, LF12 and LF20 linear guides are shown on pages 13-45.

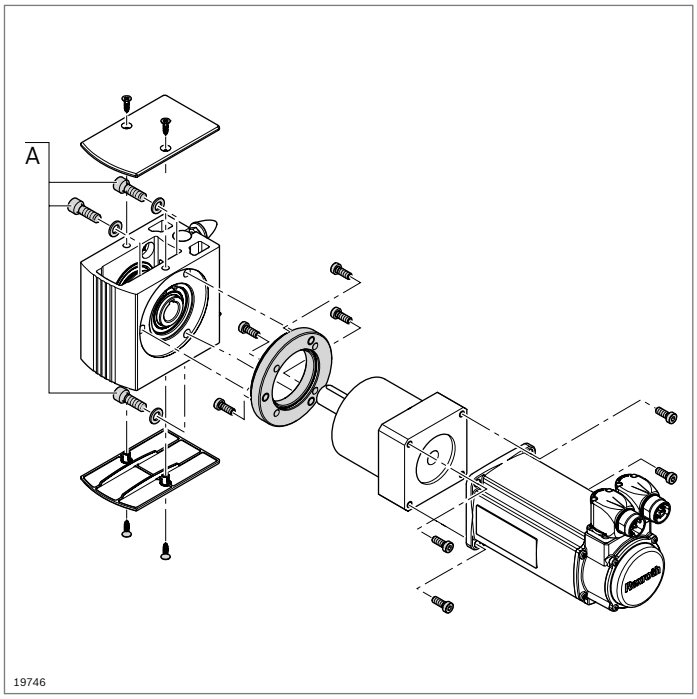

Flange

A flange is generally required for fixing the motor/gear unit in place. The connection dimensions for connection to the drive head are shown below. The connection to the motor/ gear unit depends on the model chosen in each case.

See also the connection dimensions for the drive heads LF6S (p. 13-9), LF6C (p. 13-14), LF12C (p. 13-28), LF12S (p. 13-21), LF20C (p. 13-42), LF20S (p. 13-35)

Fastening material flange A

Note regarding flange in self-build version. Adapt fastening material to suit differing flange thicknesses.

	LF6 (b = 14.5 mm)	LF12 (b = 20 mm)	LF20 (b = 20 mm)
Drive head – flange	ISO 4762 – M8x22 (3x) ISO 7092 – 8 (3x)	ISO 4762 – M8x25 (3x) ISO 7092 – 8 (3x)	ISO 4762 – M10x30 (3x) ISO 7092 – 10 (3x)

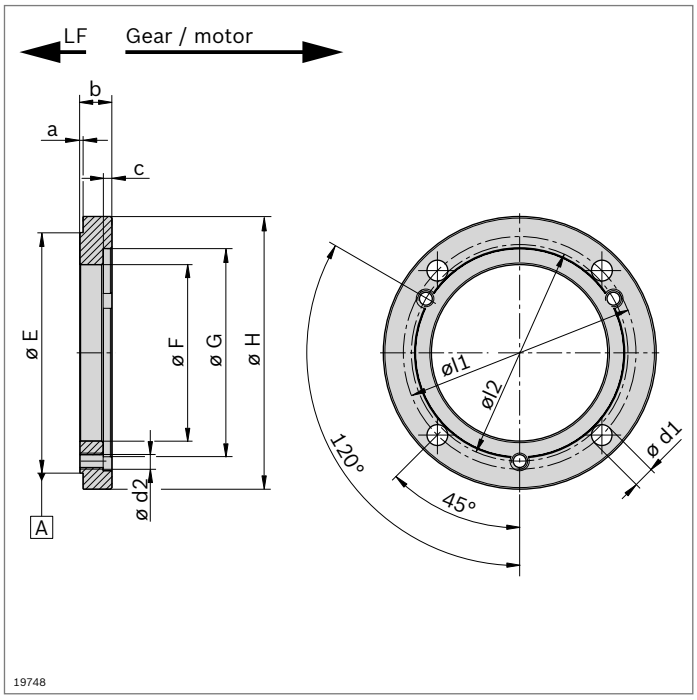

Drawing and dimensions for flange in self-build version. Customer-specific adjustment is necessary, depending on the motor and gear unit. The fastening material must be self-sourced.

Flange

Dimension parameter				LF6 (mm)	LF12 (mm)	LF20 (mm)
a				3.5 ± 0.15	3.5 ± 0.15	2 ± 0.15
b_{min} *)	//	0.05		*)	*)	*)
c*)				*)	*)	*)
E	A			Ø 88 -0.1/-0.3	Ø 111 -0.1/-0.3	Ø 150 -0.1/-0.3
F_{min} *)				Ø *)	Ø *)	Ø *)
G*)	◎	0.05	A	Ø *)	Ø *)	Ø *)
H*)				Ø *)	Ø *)	Ø *)
l1*)				Ø *)	Ø *)	Ø *)
l2				Ø 78	Ø 100	Ø 135
d1*)				Ø *)	Ø *)	Ø *)
d2	⌖	Ø 0.25		M8	M8	M10

*) Dimension according to customer drive

Note: The values must be checked by the user.

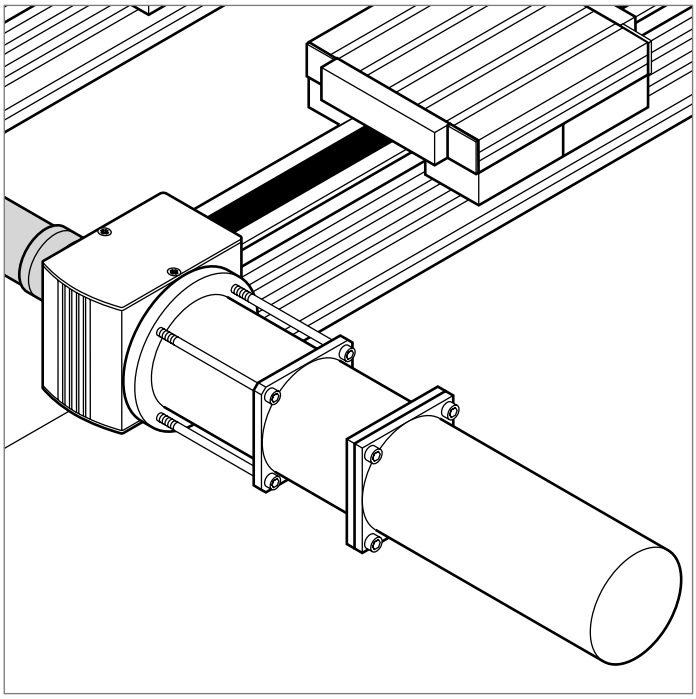

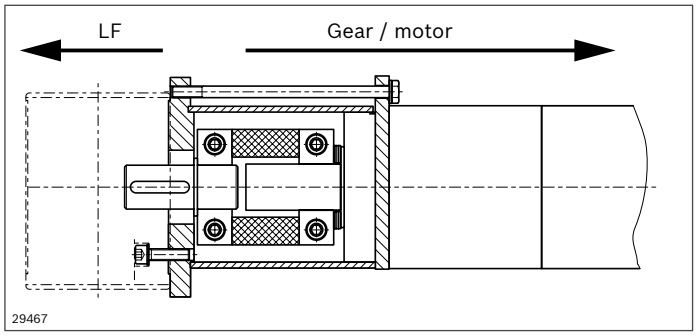

Alternative mounting with coupling

Instead of direct mounting over the section link, a coupling can be inserted. This allows any user truing errors to be rectified. The coupling must be designed and sourced by the customer.

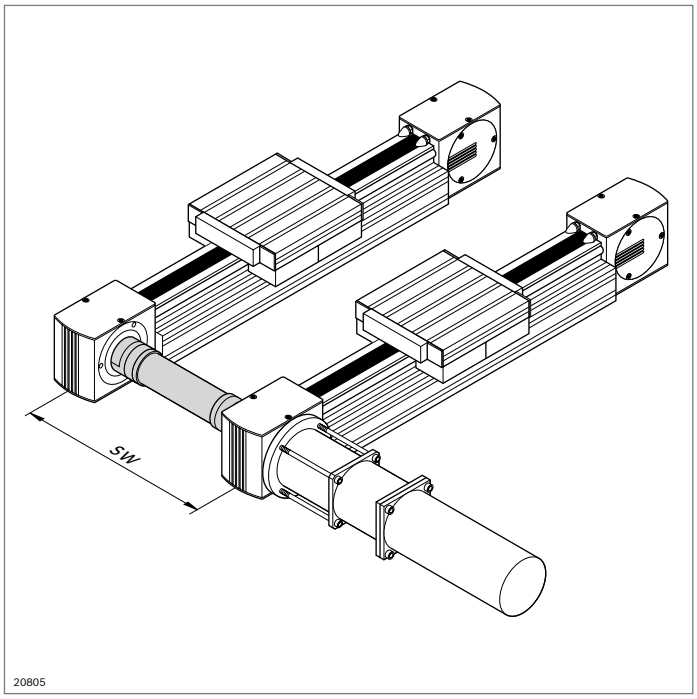

Center shafts, synchronous shafts

Center shafts

- Enable the installation of customized drive solutions

Center shaft	No.
LF6	**3 842 526 893**
LF12	**3 842 526 894**
LF20	**3 842 526 895**

Material: Steel, nickel-plated

SW = support separation

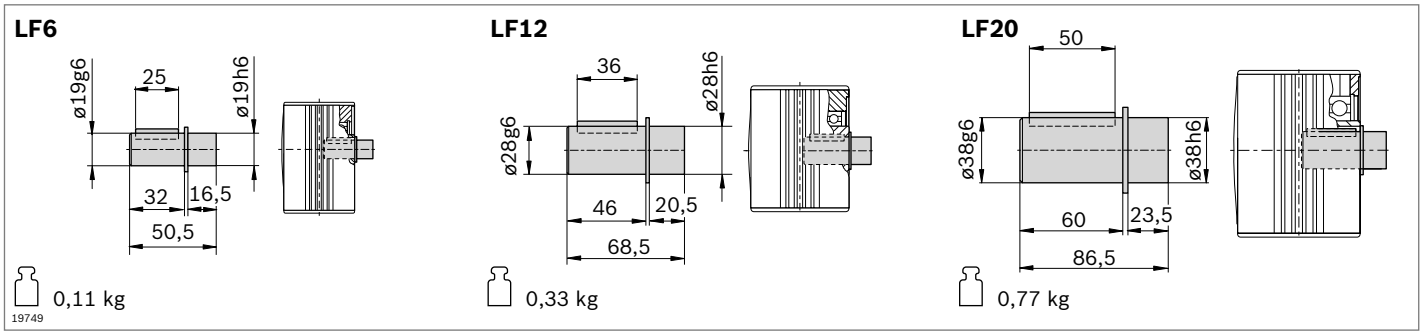

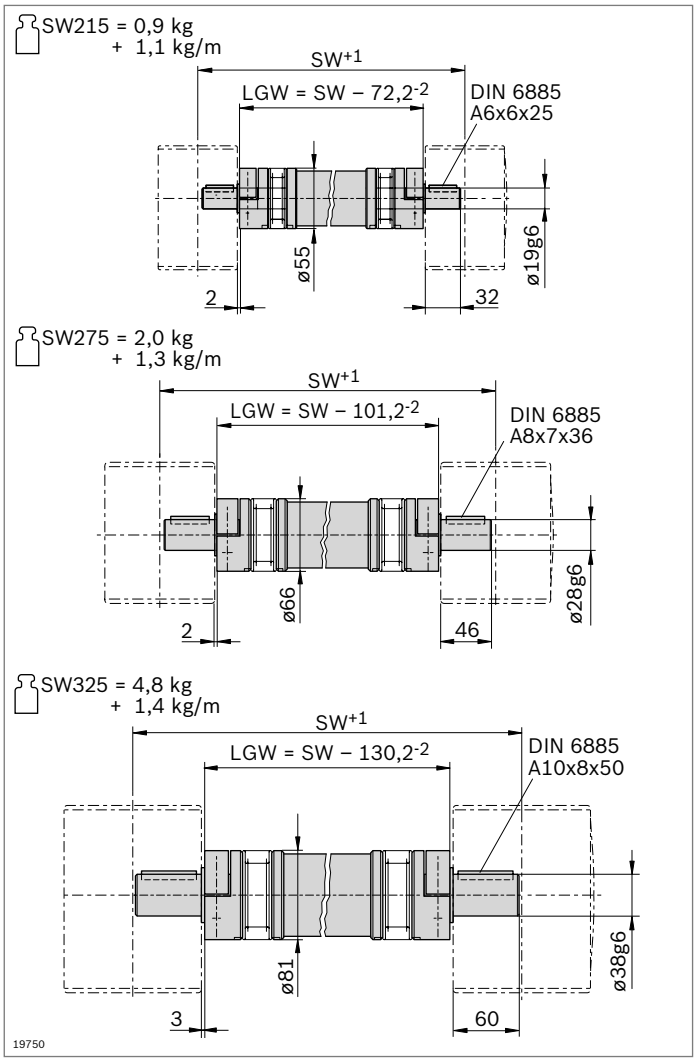

SW = support separation
LGW = length of synchronous shaft

Synchronous shafts

- Allow several linear guides to be operated synchronously while being driven by a common motor
- The synchronous shaft can be replaced without the drive heads having to be disassembled

The selection diagrams on pages 13-60 and 13-61 specify maximum values without safety margins.

Synchronous shaft	SW (mm)	No.
LF6	215 ... 3000	**3 842 994 811 / SW**
LF12	275 ... 3500	**3 842 994 812 / SW**
LF20	325 ... 3500	**3 842 994 813 / SW**

Material: Steel/aluminum

Technical data for roller, design, mounting

General technical data and calculations

Speed

v_{max} = 5 m/s

Acceleration

a_{max} = 15 m/s²

Temperature resistance

-10 °C < ϑ < 40 °C

Lubrication

All cam roller guide ball bearings are delivered with built-in lubrication felts.

Condition on delivery

Ungreased (greasing with Klüber Isoflex Topas NCA 52; see assembly instructions **3 842 527 226**)
v Lubricating felts with reservoir are not greased.
Guide rods are ungreased.

Definition of dynamic load rating C

The radial loading of constant magnitude and direction which a linear rolling bearing can theoretically withstand for a nominal service life of 100 km distance traveled (acc. to ISO 14728 Part 1).

Note regarding maximum load F_{max}

The maximum loads apply to individual loads. Combining loads decreases the expected service life.

Definition and calculation of nominal service life

The calculated service life which an individual linear rolling bearing – or a group of apparently identical rolling element bearings operating under the same conditions – can attain with a 90% probability, based on the materials of normal manufacturing quality that are generally used today and under usual operating conditions (acc. to ISO 14728 Part 1) and optimal installation conditions.

Nominal service life at constant speed

$$L = \left(\frac{C}{F}\right)^3 \cdot 10^5$$

$$L_h = \left(\frac{L}{2 \cdot s \cdot n_S \cdot 60}\right)$$

L = nominal service life (m)
L_h = nominal service life (h)
C = dynamic load capacity (N)
F = equivalent load (N)
s = length of stroke* (m)
n_S = stroke frequency (double stroke) (min^{-1})

*) For s < 2 x L_1 (trolley length) load capacities are reduced.
Please consult us.

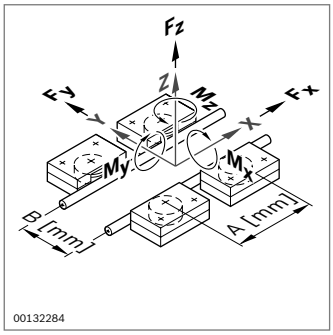

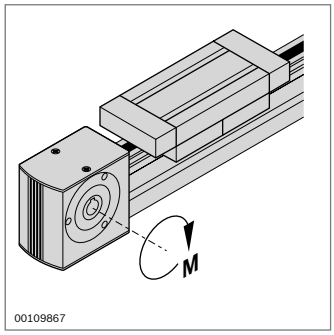

Load-dependent design

- The specified values are maximum single loads, which are reduced when loads are combined

Note: If cumulative forces and moments arise in your application, please use the Linear Motion Designer LF-MGE linear guide calculation program to recalculate your design (p. 13-57)

	F_z (N)	F_y (N)	M_x (Nm)	M_z (Nm)	M_y (Nm)	v_{max} (m/s)	M_{max} (Nm)
LF6S	850	1400	13.6	0.7 x A[1)]	0.4 x A[1)]	5	9.5 / 7.6
LF6C	850	1400	0.4 x B[1)]	0.7 x A[1)]	0.4 x A[1)]	5	15
LF12S	2000	3500	78.0	1.7 x A[1)]	1.0 x A[1)]	5	30
LF12C	2000	3500	1.0 x B[1)]	1.7 x A[1)]	1.0 x A[1)]	5	30
LF20S	6000	12500	240.0	6.2 x A[1)]	3.0 x A[1)]	5	100
LF20C	6000	12500	3.0 x B[1)]	6.2 x A[1)]	3.0 x A[1)]	5	100

[1)] Note: A (spacing of support rollers, see image above) in mm; see below for calculation of B (track width)

Do not exceed the maximum loading of the screwed connections for rails, carriages and fastenings.

Take account of the general service life of lubricants!

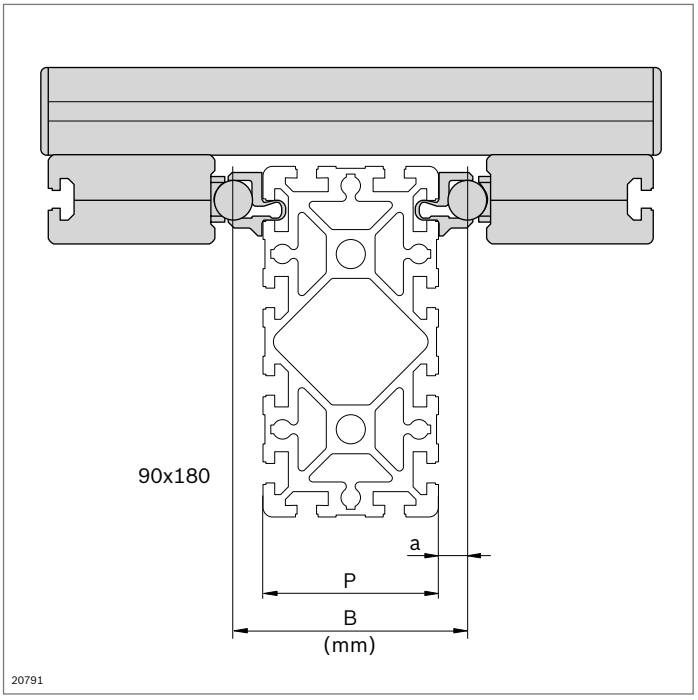

Calculating the track width B

B = P + 2 x a

B = track width (in mm)
P = profile width (in mm)
a = rod spacing (in mm)

Values for a: for LF6C = 9.5 mm (p. 13-13)
for LF12C = 9 mm (p. 13-25)
for LF20C = 15 mm (p. 13-41)

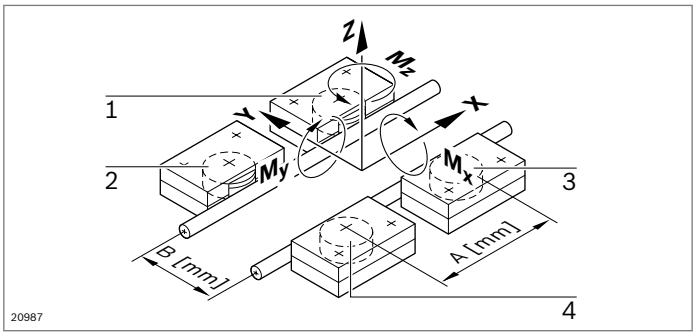

Roller 1:

$F_r = -(\frac{F_y}{2}) - (\frac{M_z}{A})$

$F_a = (\frac{F_z}{4}) + (\frac{M_x}{2 \cdot B}) - (\frac{M_y}{2 \cdot A})$

Roller 3:

$F_r = +(\frac{F_y}{2}) + (\frac{M_z}{A})$

$F_a = (\frac{F_z}{4}) - (\frac{M_x}{2 \cdot B}) - (\frac{M_y}{2 \cdot A})$

Roller 2:

$F_r = -(\frac{F_y}{2}) + (\frac{M_z}{A})$

$F_a = (\frac{F_z}{4}) + (\frac{M_x}{2 \cdot B}) + (\frac{M_y}{2 \cdot A})$

Roller 4:

$F_r = +(\frac{F_y}{2}) - (\frac{M_z}{2})$

$F_a = (\frac{F_z}{4}) - (\frac{M_x}{2 \cdot B}) + (\frac{M_y}{2 \cdot A})$

Calculation of load on bearing for a trolley

Loading of the individual rollers

- A mm: spacing of the rollers' rotational axes
- B mm: center-to-center distance between the guide rods
- Only compressive forces can be transferred between rollers and guide rods in the radial direction. The following therefore applies in respect of radial forces:
  $F_r \leq 0$: $F_r = 0$
- Rollers can be loaded equally in both directions. Therefore force F_a is sufficient for calculating P and P_0

Table 1: Load factors for rollers

	Load case: $F_r \geq \lvert F_a \rvert$				Load case: $F_r < \lvert F_a \rvert$			
	x	y	x_0	y_0	x	y	x_0	y_0
LF6	1	3.1	1.2	3.5	0.5	3.6	1	3.7
LF12	1	4.2	1.2	5.2	0.5	4.7	1	5.4
LF20	1	4	1.2	4.9	0.5	4.5	1.1	5

Table 2: Rollers - load capacities

	C for 10^5 m (N)	C_o (N)
LF6	3670	2280
LF12	8300	5000
LF20	23400	16600

Equivalent dynamic and static loads

To calculate the service life of a cam roller guide, the roller with the greatest load has to be considered.
The following must be determined:

$P = \max (P_1,....,P_4)$

$P_0 = \max (P_{01},...,P_{04})$

Equivalent dynamic load P

$$P = x \cdot |F_r| + y \cdot |F_a|$$

Equivalent static load P_0

$$P_0 = x_0 \cdot |F_r| + y_0 \cdot |F_a|$$

F_r (N): radial load of the roller
The following applies: $F_r \leq 0$: $F_r = 0$

F_a(N): axial load of the roller

x, x_0: radial factor (Table 1)
y, y_0: axial factor (Table 1)

C: dynamic load capacity (Table 2)
C_0: static load capacity (Table 2)

Static safety values: $S_0 = (\frac{C_0}{P_0})$

$S_0 \geq 4$ recommended!

Size selection

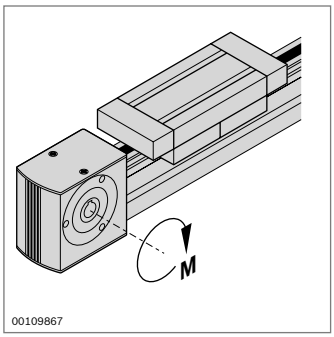

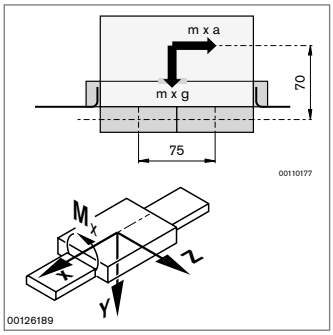

Determining the forces and moments which arise

F_{xdyn}, F_{ydyn}, F_{zdyn} [1)]
M_{xdyn}, M_{ydn}, M_{zdyn}

[1)] $F_{Z\,dyn}$ includes the weight of the trolley

All the influences must be considered, e.g.:

- net mass and load
- acceleration forces and moments
- process forces and moments
- loads caused by dampers and/or stops

Example:

m = 30 kg a = 2.5 m/s²;
L_1 = 150 mm L_2 = 5000 mm
g = 9.81 m/s²

$F_{z\,dyn} = m \cdot g = 294$ N
$M_{y\,dyn} = m \cdot a \cdot 70$ mm = 5.25 Nm

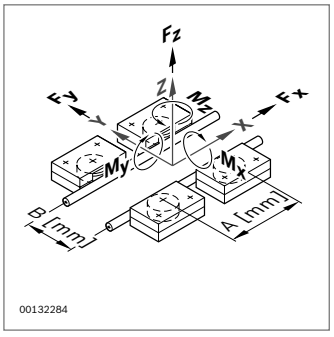

Determining the permissible forces and moments

For values see p. 13-51

Example of LF 6 S, LF 6 C

$F_{z\,dyn\,zul} = 850$ N > $F_{z\,dyn} = 294$ N
$M_{y\,dyn\,zul} = 0.4 \cdot A = 0.4 \cdot 75$ mm
= 30 Nm > $M_{y\,dyn} = 5.25$ Nm

Selection of the suitable size

$F_{x,\,y,\,z\,dyn} < F_{x,\,y,\,z\,dyn\,zul}$!
$M_{x,\,y,\,z\,dyn} < M_{x,\,y,\,z\,dyn\,zul}$!

If F and M are cumulative:
recalculate using linear guide calculation program.
Note: When using the program, account must be taken of the directions of the respective forces and moments, i.e. the plus/minus sign, in order for the program to be able to calculate correctly.

You can order the CD directly from our media catalog, number 3 842 540 900.

www.boschrexroth.com/mediadirectory

Example:

$F_{z\,dyn} = 294$ N < $F_{z\,dyn\,zul} = 850$ N !
$M_{y\,dyn} = 5{,}25$ Nm < $M_{y\,dyn\,zul}$
= 30 Nm !

Calculating the drive

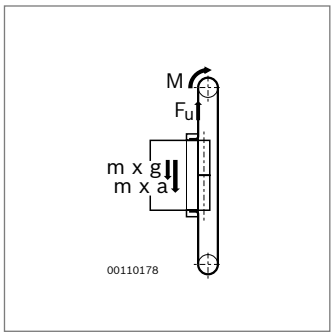

Peripheral force F_u

$$F_u = m \cdot a + m \cdot g + F_0 + \mu \cdot m \cdot g$$
$$F_u \leq F_{u\,zul}\ !$$

F_0: frictional force on return units
μ : coefficient of friction of the guide
see table below.

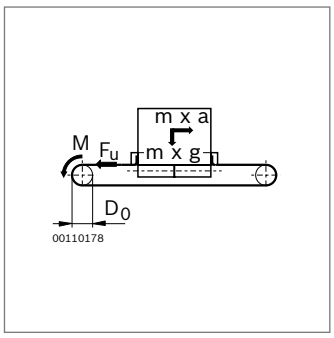

Alternative calculation formula

$$F_u = m \cdot a + F_0 + \mu \cdot m \cdot g \leq F_{u\ zul}\ !$$

Example of LF6C

m = 30 kg; a = 2.5 m/s²
F_u = (30 · 2.5)N + 10 N
+ (0.025 · 30 · 9.81)N
F_u = 75 N + 10 N + 0.025 · 294 N
F_u = 92.35 N < $F_{u\,zul}$ = 600 N !

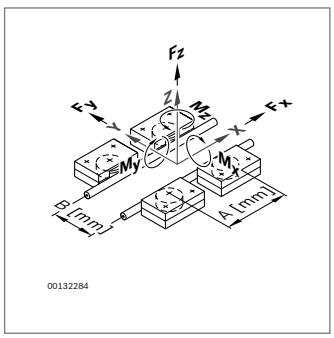

Required drive torque M

$$M = ½ \cdot D_0 \cdot F_u \leq M_{zul}\ !$$

Example:

M = ½ · 50.94 mm · 92.35 N
= 2.4 Nm
M = 2.35 Nm ≤ M_{zul}
= 15 Nm !

	v (m/s)	**$F_{u\,zul}$** (N)	**M_{zul}** (Nm)	**F_0** (N)	**μ**	**D_0** (mm)	**$D_0 \cdot \pi$** (mm)
LF6S	≤ 2.0	500	9.5	10	0.025	38.21	120
LF6S	2.01 ... 5.0	400	7.6	10	0.025	38.21	120
LF6C	≤ 5.0	600	15.0	10	0.025	50.94	160
LF12S	≤ 5.0	820	30.0	30	0.020	73.20	230
LF12C	≤ 5.0	820	30.0	30	0.020	73.20	230
LF20S	≤ 5.0	2000	100.0	35	0.015	101.86	320
LF20C	≤ 5.0	2000	100.0	35	0.015	101.86	320

F_0: frictional force on return units; μ : coefficient of friction

Checking the selected size

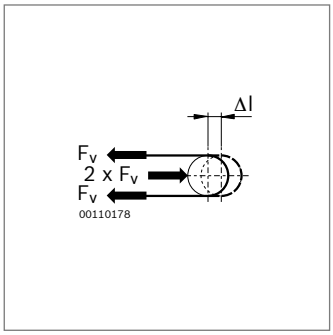

Preload force F_v of toothed belt

$0.5 \cdot F_u \leq F_v \leq F_u$
Recommendation: $F_v = 0.5 \cdot F_u$

Example:
F_u = 92.35 N
F_v = 50 N

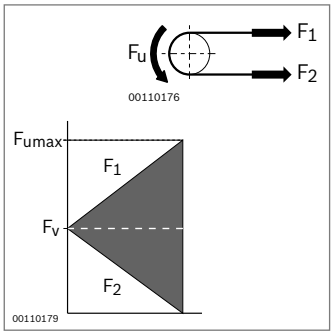

Maximum toothed belt force $F_{1\,max}$

$F_{1\,max} = F_v + 0.5 \cdot F_u \leq F_{1\,zul}$!
$F_{2\,min} = F_v - 0.5 \cdot F_u > 0$!

Example of LF6C
$F_{1\,max}$ = 50 N + 0.5 · 92.35 N
$F_{1\,max}$ = 96.18 N < $F_{1\,zul}$ = 900 N !
$F_{2\,min}$ = 50 N – 0.5 · 92.35 N
$F_{2\,min}$ = 3.825 N > 0 !

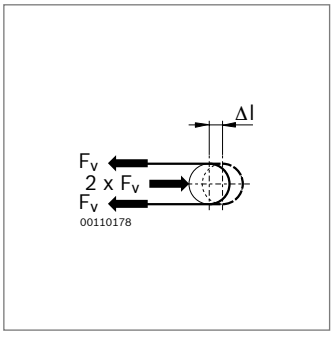

Required preload length ΔI

$\Delta l = 0.5 \cdot F_v \cdot L / C_{spez} \leq \Delta l_{max}$!

Example:
$L = 2 \cdot L_2 - L_1 + 400$ mm
L = 10 250 mm
$\Delta l = 0.5 \cdot 50\ N \cdot 10\,250\ mm$
/ 420 000 N
$\Delta l = 0.8\ mm < \Delta l_{max} = 13\ mm$!

	$F_{1\,zul}$ (N)	C_{spez} (N)	Δl_{max} (mm)	L (mm)	Page
LF6S	750	315000	11	$2 \cdot L_2 - L_1 + 360$	13-6
LF6C	900	420000	13	$2 \cdot L_2 - L_1 + 400$	13-11
LF12S	1230	1250000	16	$2 \cdot L_2 - L_1 + 630$	13-16
LF12C	1230	1250000	16	$2 \cdot L_2 - L_1 + 630$	13-23
LF20S	3000	1870000	23	$2 \cdot L_2 - L_1 + 780$	13-30
LF20C	3000	1870000	23	$2 \cdot L_2 - L_1 + 780$	13-37

C_{spez}: Belt stiffness;
L: Long toothed belts, see also LF6 (p. 13-6), LF6C (p. 13-11),
LF12S (p.13-16), LF12C (p. 13-16),
LF20S (p. 13-30), LF20C (p. 13-37)

Dimensioning of synchronous shafts

			LF6	LF12	LF20
Support separation SW	horizontal		215 ... 3000 mm	275 ... 3500 mm	325 ... 3500 mm
	vertical		215 ... 2000 mm	275 ... 2000 mm	325 ... 1100 mm
Nominal torque			max. 30 Nm	max. 60 Nm	max. 150 Nm
Permitted rpm			diagram 3 (p. 13-61) **max. 0.7 · nk**	diagram 3 (p. 13-61) **max. 0.7 · nk**	diagram 3 (p. 13-61) **max. 0.7 · nk**
Elasticity	axial		max. 2 mm	max. 3 mm	max. 4 mm
	lateral		diagram 4 (p. 13-61)	diagram 4 (p. 13-61)	diagram 4 (p. 13-61)
	torsion angle		diagram 5 (p. 13-61)	diagram 5 (p. 13-61)	diagram 5 (p. 13-61)

Diagram 1: Torsion stiffness

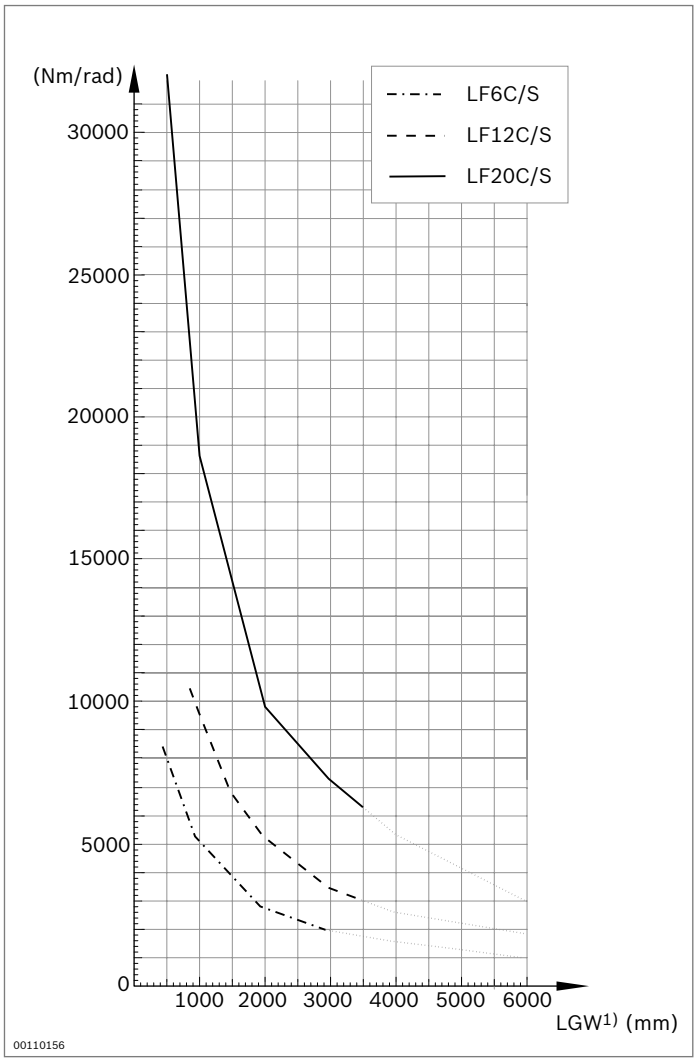

1) Long synchronous shaft LGW

LF6	LGW = SW - 72
LF12	LGW = SW - 101
LF20	LGW = SW - 130

Diagram 2: Mass inertia

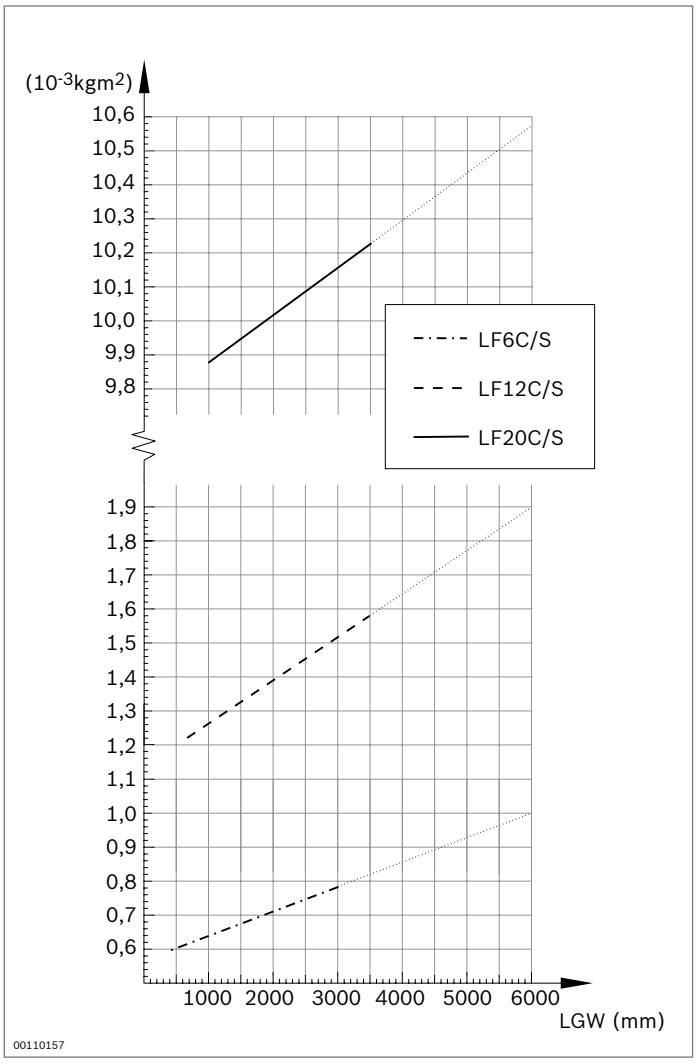

Diagram 3: Critical rpm nk due to bending

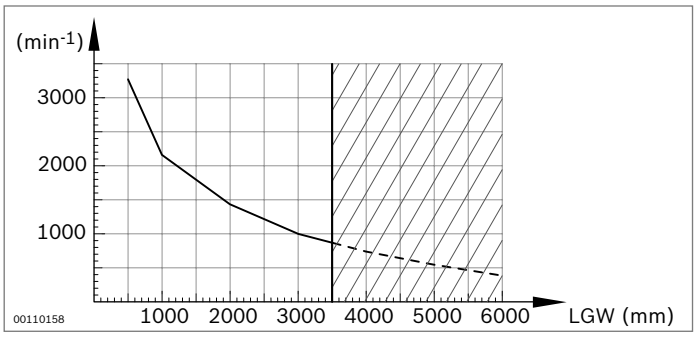

Diagram 4: Lateral offset

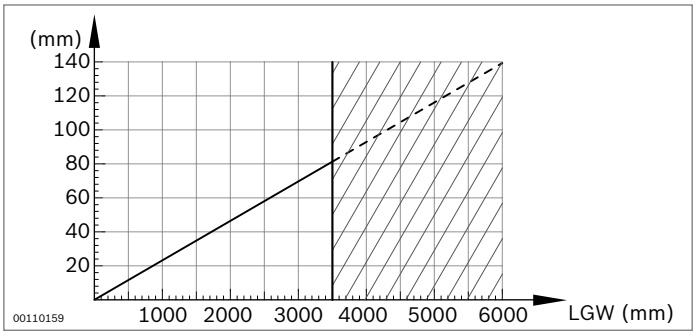

Aligned shafts are recommended.

Diagram 5: Torsion angle

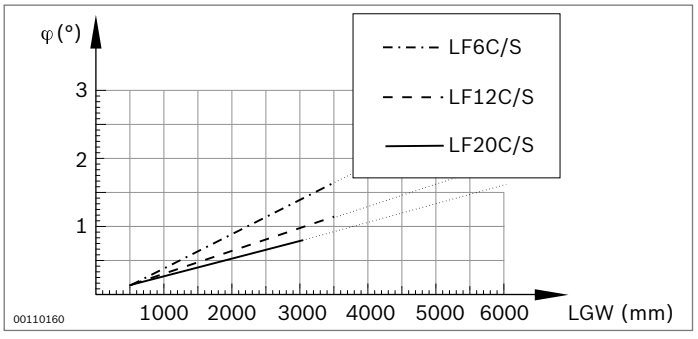

Planning tool LF-MGE

Automation from a single source
Planning, implementation, commissioning and training – Rexroth offers you support in every project phase.
Besides the catalogs and brochures, we provide you with powerful planning tools.
On our website you can find information on new products as well as continually updated information on our existing products.
In addition, our sales and service teams are on hand to answer specific questions.
When implementing our systems, we also support you with our broad range of training measures.

Design program
With the LF-MGE Linear Motion Designer we offer a professional planning tool for the quick and easy design of linear guides.

LF-MGE	No.
	3 842 540 900

Performance characteristics
- Calculation of the service life of the individual guide bearings
- Combination of up to 16 guide bearings
- Dynamic movement sequence input
- Checking of the selected size
- Quick and easy design
- Clear displaying and documenting of results

Multilingual content and graphical user interface in 5 different languages (de/en/fr/it/es). The program can be run directly from the CD without separate installation.

You can order the CD directly from our media catalog, number 3 842 540 900.

www.boschrexroth.com/mediadirectory

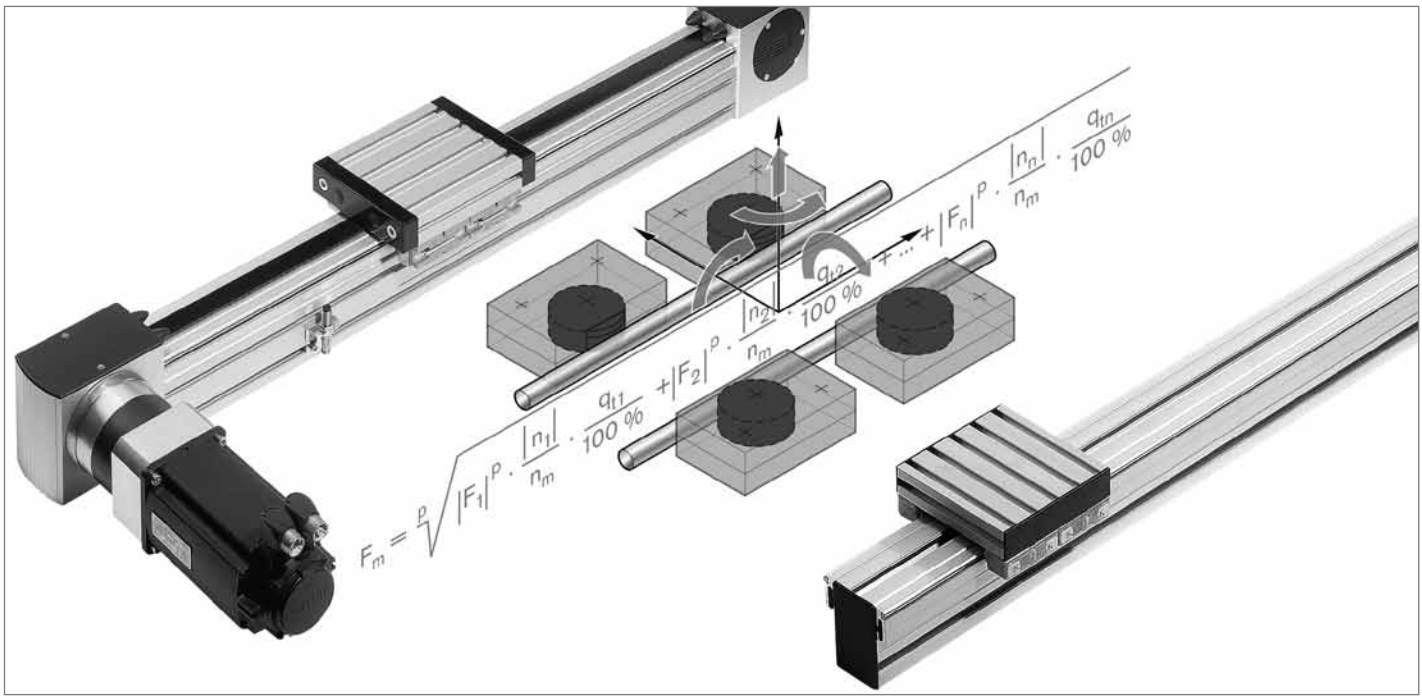

Tools

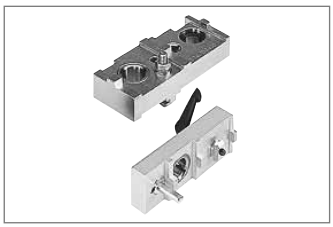

Drilling jigs (p. 14-2)

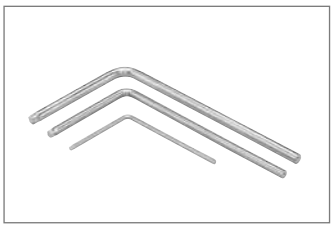

Offset screwdriver Torx® (p. 14-6)

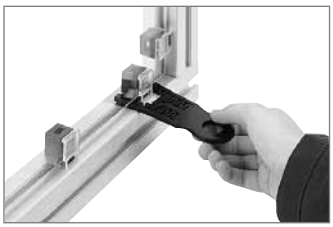

Variofix remover, flexible grinder for anodized surfaces (p. 14-7)

Beveling shears (p. 14-7)

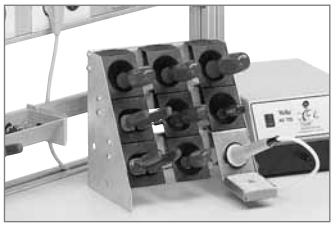

Tool shelf, tool holder (p.14-8)

Let us send you information on the complete product range of Bosch power tools!

Robert Bosch GmbH
Geschäftsbereich Elektrowerkzeuge
PO Box 10 01 56
D-70745 Leinfelden-Echterdingen
http://www.bosch-pt.de

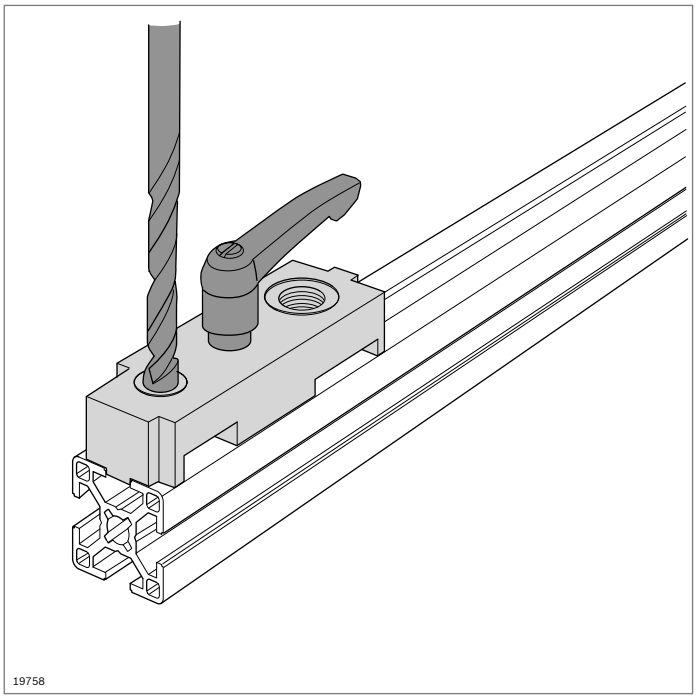

Drilling jigs

- For simple drilling of standard holes for the Rexroth range of connectors
- Stopping surfaces and edges for precise hole positioning
- Lockable

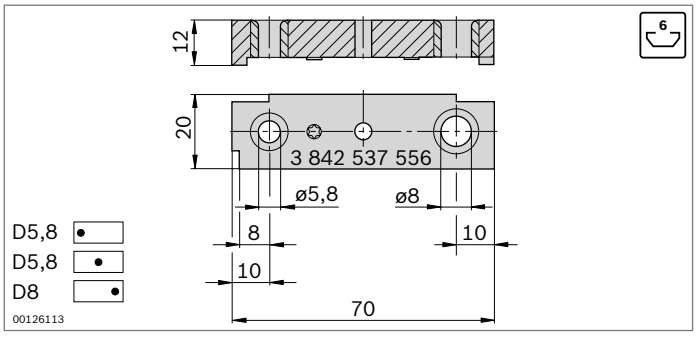

Drilling jigs – slot 6 mm

- For through-holes (ø 5.8) for hexagonal-star socket screwdrivers T25
- For fastening holes (ø 8) for quick connectors

Drilling jig	No.	FS
Slot 6 mm	**3 842 537 556**	FS1

Material: Aluminum
Scope of delivery: Incl. fastening material (FS)

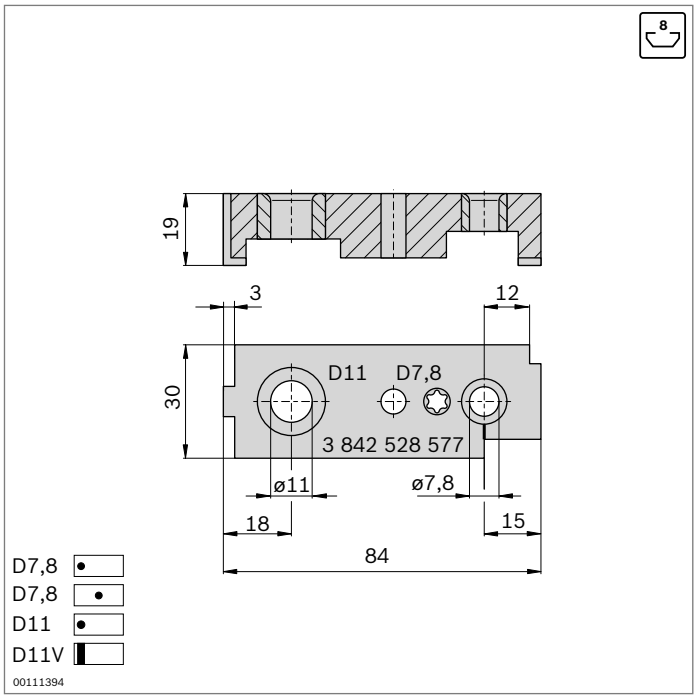

Drilling jigs – slot 8 mm

- For through-holes (ø 7.8) for hexagonal-star socket screwdrivers T40
- For fastening holes (ø 11) for quick connectors

Drilling jig	No.	FS
Slot 8 mm	**3 842 528 577**	FS2

Material: Steel; galvanized
Scope of delivery: Incl. fastening material (FS)

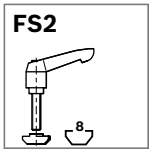

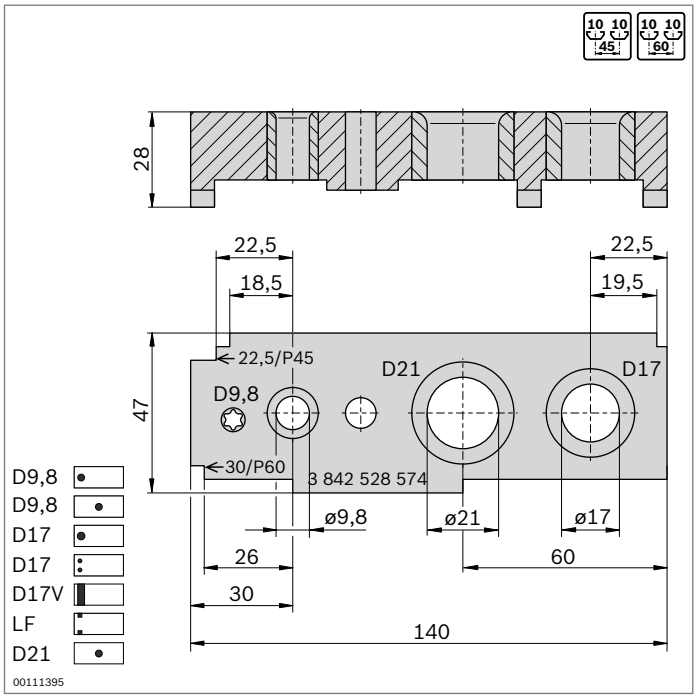

Drilling jigs – slot 10 mm, modular dimensions 45, 60

- For fastening holes (ø 17) for bolt connectors, quick connectors, and threaded sleeves
- For through-holes (ø 9.8) for hexagonal-star socket screwdrivers T50
- For counterbores (ø 21) for pneumatic connections

Drilling jig	No.	FS
Slot 10 mm, modular dimensions 45, 60	**3 842 528 574**	FS3

Material: Steel; galvanized
Scope of delivery: Incl. fastening material (FS)

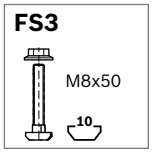

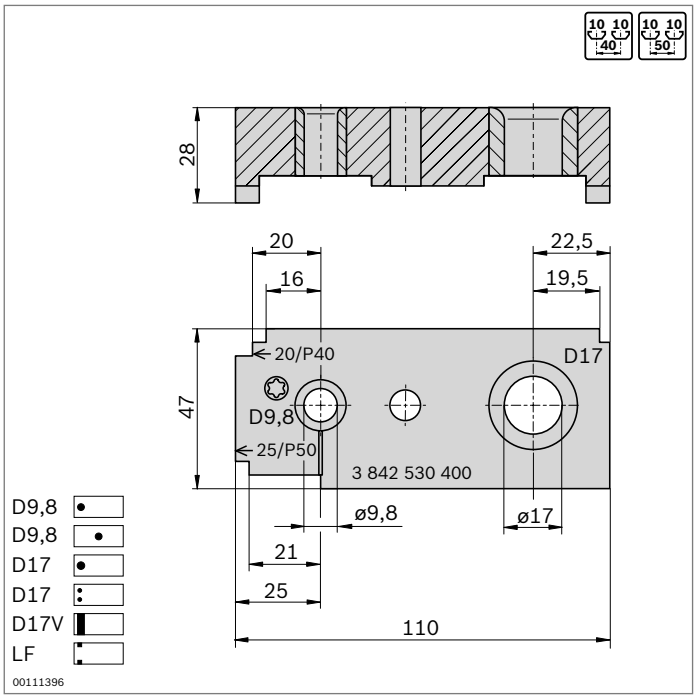

Drilling jigs – slot 10 mm, modular dimensions 40, 50

- For through-holes (ø 9.8) for hexagonal-star socket screwdrivers T50
- For fastening holes (ø 17) for bolt connectors, quick connectors, and threaded sleeves

Drilling jig	No.	FS
Slot 10 mm, modular dimensions 40, 50	**3 842 530 400**	FS3

Material: Steel; galvanized
Scope of delivery: Incl. fastening material (FS)

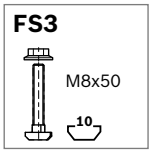

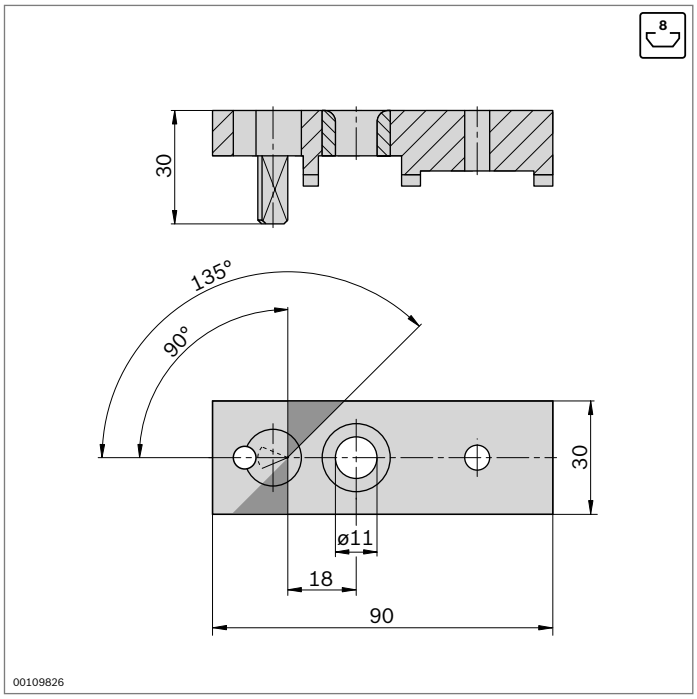

Drilling jig for diagonally sawn profiles – slot 8 mm

- For fastening holes (ø 11) for bendable quick connectors

Drilling jig	No.	FS
Slot 8 mm – diagonally sawn profiles	**3 842 516 729**	FS2

Material: Aluminum
Scope of delivery: Incl. fastening material (FS)
Also see bendable quick connector (p. 3-54)

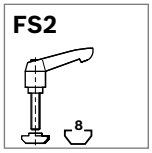

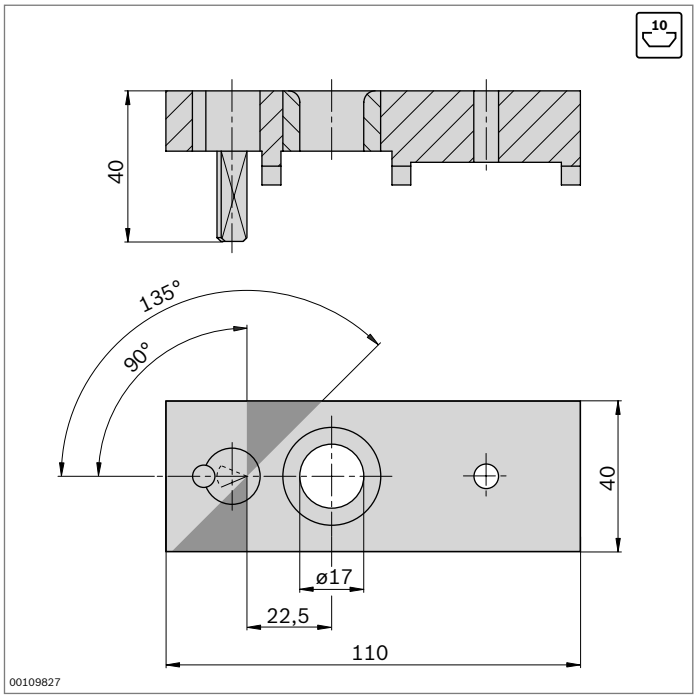

Drilling jig for diagonally sawn profiles – slot 10 mm

- For fastening holes (ø 17) for bendable quick connectors

Drilling jig	No.	FS
Slot 10 mm – diagonally sawn profiles	**3 842 516 731**	FS4

Material: Aluminum
Scope of delivery: Incl. fastening material (FS)
Also see bendable quick connector (p. 3-54)

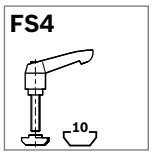

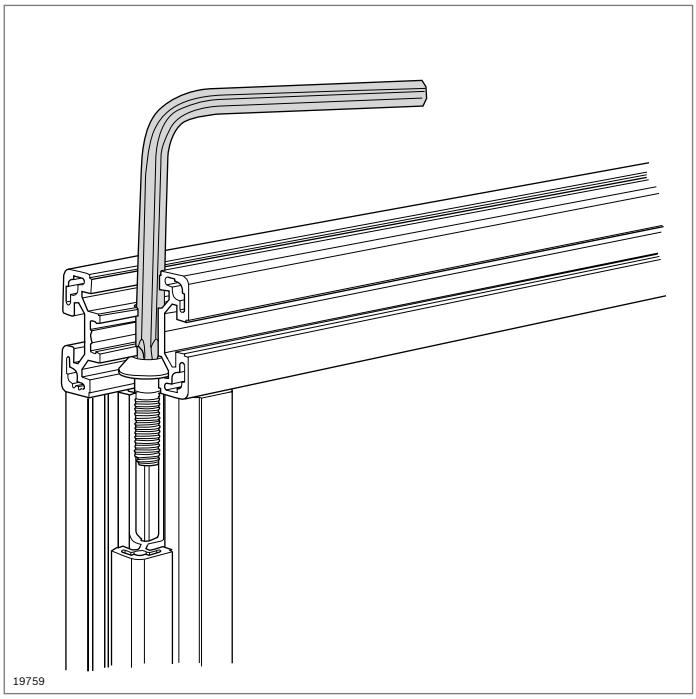

Offset screwdriver Torx®

- Offset screwdriver for the central bolts (p. 3-38):
  - S6x16-**T25**
  - S8x25-**T40**
  - S12x30-**T50**, M12x30-**T50**
- Long shank for easy screw head access

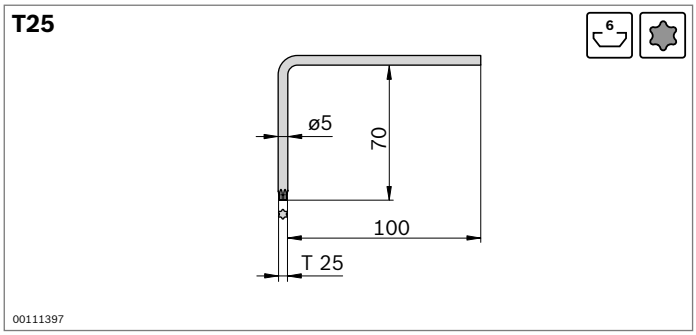

Offset screwdriver T25		No.
	5	**3 842 528 590**

Material: Chrome vanadium steel

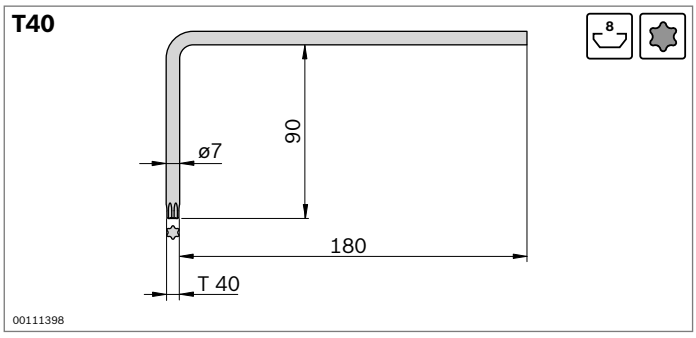

Offset screwdriver T40		No.
	5	**3 842 528 588**

Material: Chrome vanadium steel

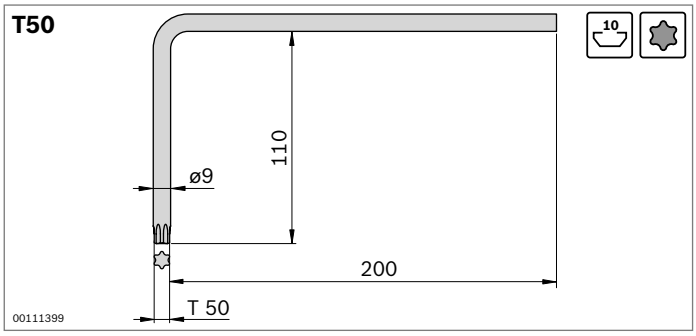

Offset screwdriver T50		No.
	5	**3 842 528 586**

Material: Chrome vanadium steel

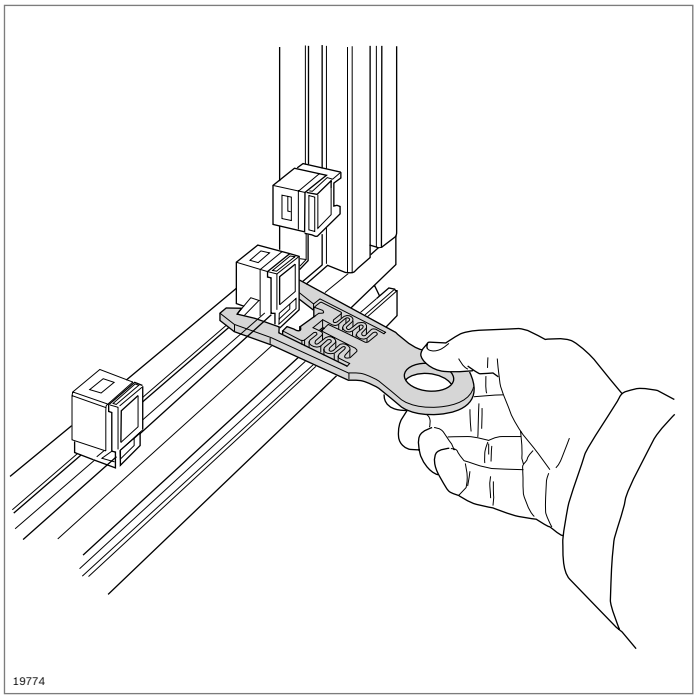

Variofix remover

- For fast, easy removal of the Variofix snap-in clip (p. 7-6), even in hard-to-reach places
- The remover is pushed onto the snap-in clip of the Variofix block so that it spreads the teeth of the clip and can then be removed together with the clip

Variofix remover		No.
	10	**3 842 526 589**

Material: PA

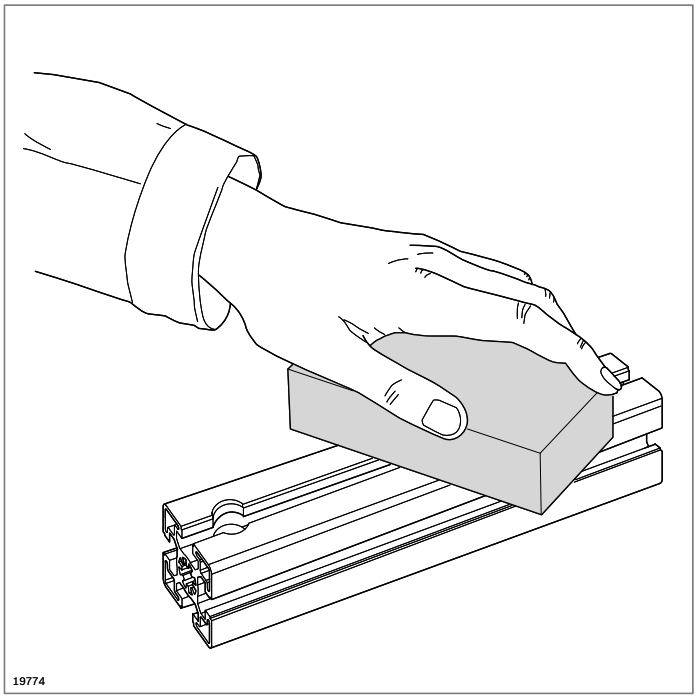

Flexible grinder for anodized surfaces

- Hand grinder for removing light soiling and minor scratches
- Handy grindstone made of flexible base material containing abrasive agents
- Long service life thanks to automatic, continual surface renewal, like an eraser
- Suitable for all natural-colored, anodized surfaces, e.g. also for aluminum windows and doors

Flexible grinder for anodized surfaces	No.
	3 842 518 650

Material: Silicon carbide 60%
Polyurethane 40%

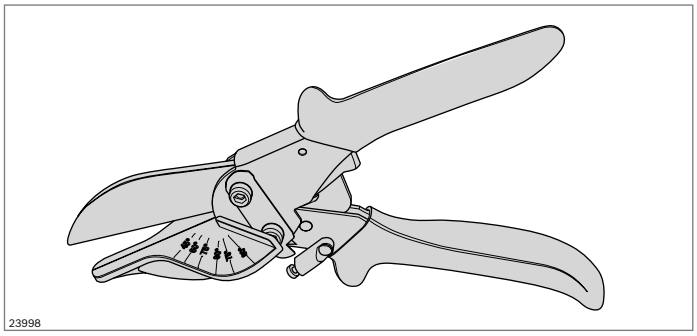

Beveling shears

- For length-trimming of plastic profiles, e.g. slot cover profiles

Beveling shears	No.
	3 842 547 982

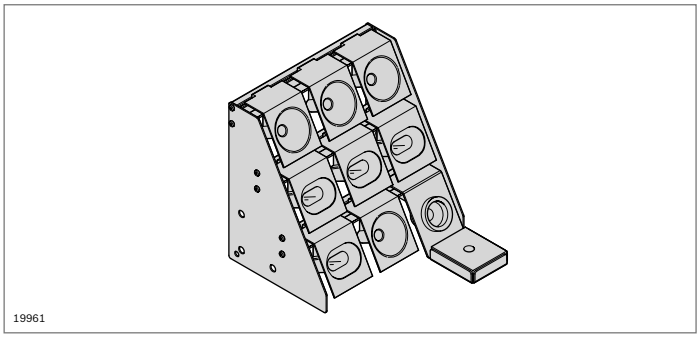

Tool shelf
Tool holder

- Tool shelf and tool holder for ergonomic and handy positioning of tools at the workstation
- Tool shelf can be individually equipped
- Accessories: Container mount (p. 2-59)

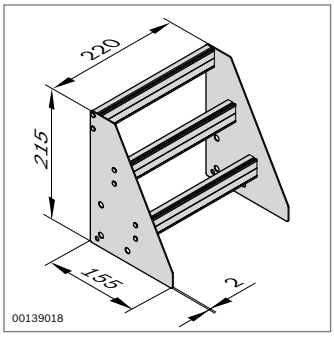

Tool shelf	ESD	No.
		3 842 514 519

Material: Side parts: sheet aluminum
Suspension profile: aluminum, anodized

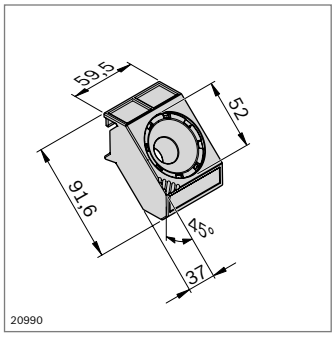

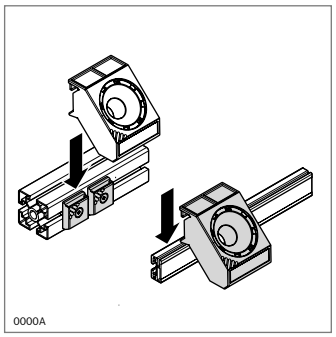

Tool holder D52 for bucket-trays D52-9 and D52-15

Tool holder D52	ESD	No.
		3 842 544 832

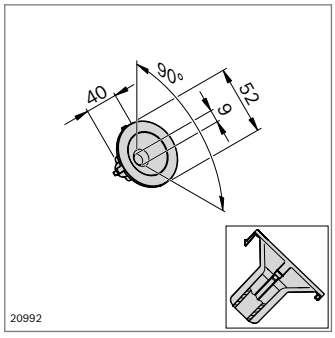

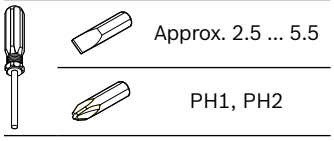

Bucket-tray D52-9 (open base)	ESD	No.
		3 842 544 834

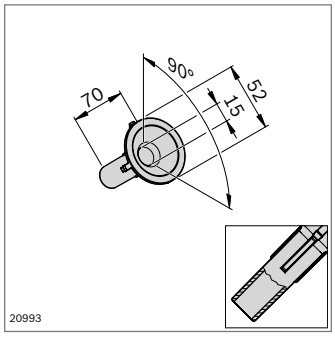

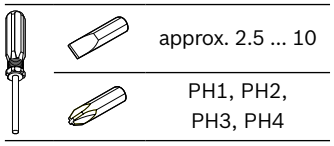

Bucket-tray D52-15 (open base)	ESD	No.
		3 842 544 835

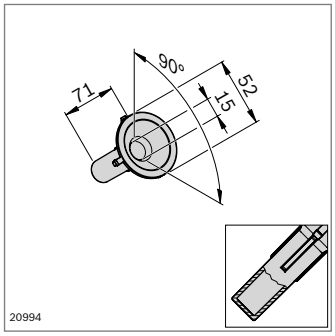

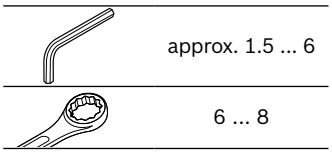

Bucket-tray D52-15 (closed base)	ESD	No.
		3 842 544 836

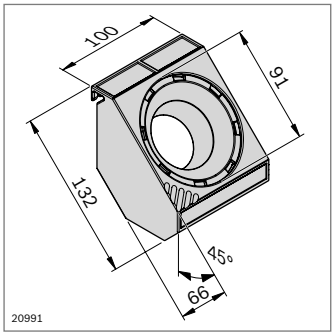

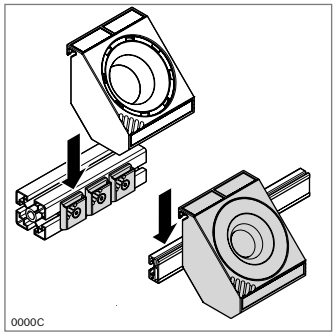

Tool holder D91 for bucket-trays D91-32, D91 Oval53 L100 and D91 Oval53 L136

Tool holder D91	ESD	No.
		3 842 544 833

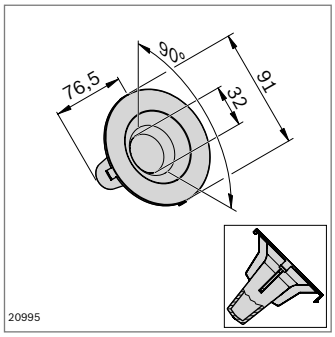

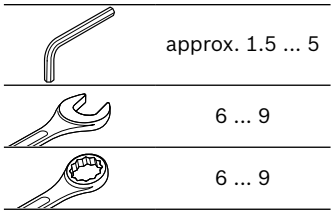

Bucket-tray D91-32 (closed base)	ESD	No.
		3 842 544 837

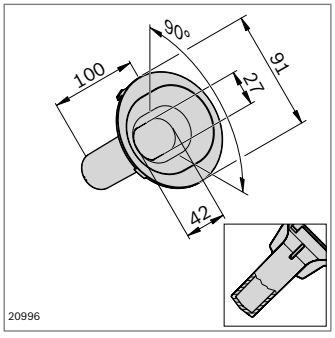

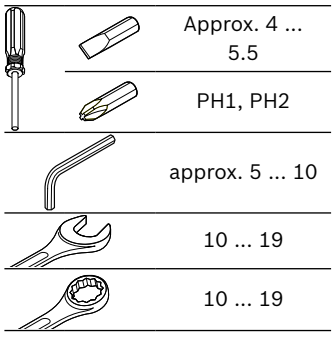

Bucket-tray D91 Oval53 L100 (closed base)	ESD	No.
		3 842 546 744

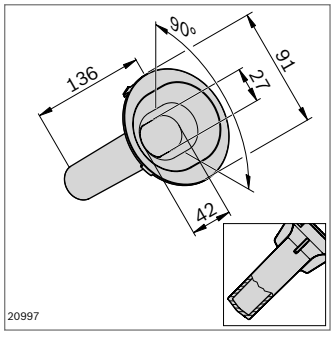

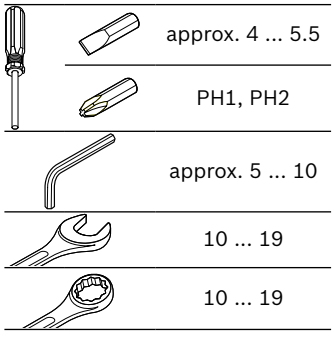

Bucket-tray D91 Oval53 L136 (closed base)	ESD	No.
		3 842 546 745

FiFo station

Guide rail (p. 15-2)

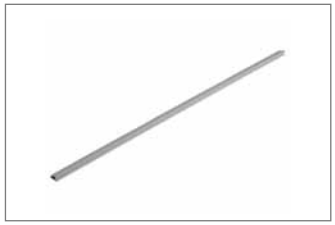

Adapter (p. 15-3)

Right end cap, small (p. 15-3)

Left end cap, small (p. 15-3)

End cap, large (p. 15-3)

FiFo station

- Components for constructing a FiFo station for material shuttles
- Clearly organized and highly transparent production operations through having standardized delivery routes
- Modular system lets you adapt the layout to your needs and to your available space

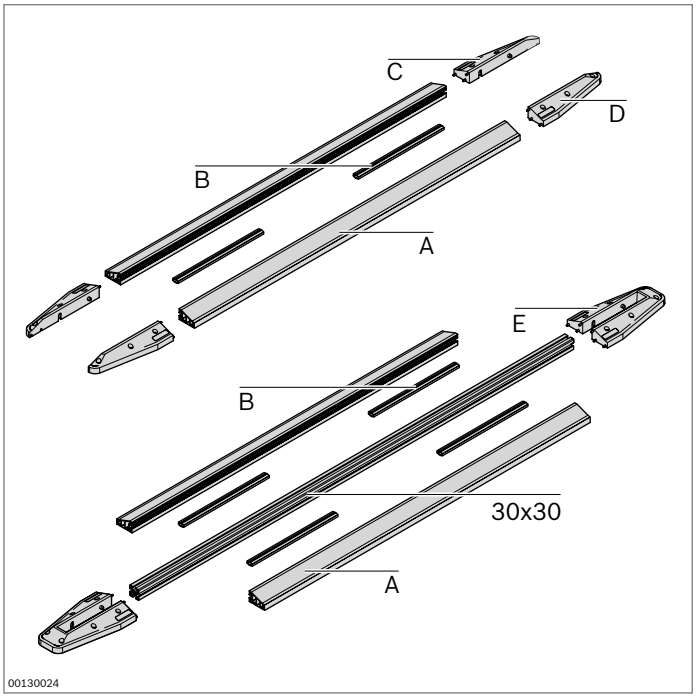

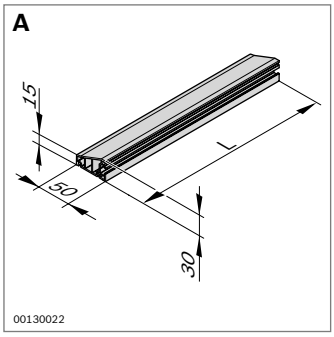

- Adhesive strips for fastening to floor
- Screw fitting to floor possible at end caps

Guide rail	L (mm)		No.
A	1200	10	**3 842 540 012**
	2400	10	**3 842 539 894**

Material: PVC, yellow

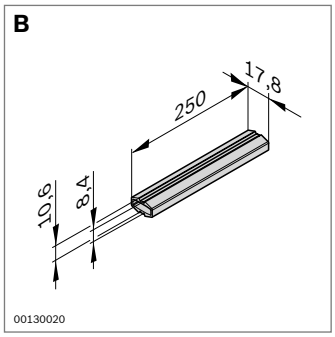

- For the parallel connection of guide rails, or a guide rail with a 30x30 profile

Adapter		No.
B	20	**3 842 539 898**
Material:	PP	

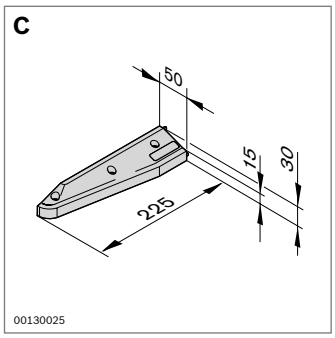

- For use as a jointing aid and for fastening the guide rails to the floor

Right-hand end cap, small		No.
C	10	**3 842 539 895**
Material:	PA 6; black	

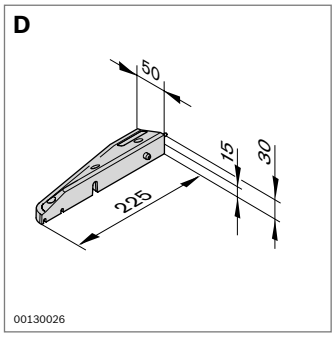

- For use as a jointing aid and for fastening the guide rails to the floor

Left-hand end cap, small		No.
D	10	**3 842 539 896**
Material:	PA 6; black	

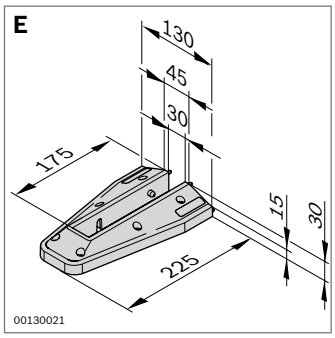

- For installing a 30x30 profile between two guide rails
- The 30x30 profile can be used to construct flow rack systems, information boards, and height limits. Since the guide rails are flat-sided, setup can be done using a wide profile (40, 45, 50)

Required accessories:

- Profile 30x30 (p. 2-17)

End cap, large		No.
E	10	**3 842 539 897**
Material:	PA 6; black	

Components for lateral guides

Profile rails, slide rails
(p. 16-3)

Holder, fixed (p. 16-6)

Holder, variable (p. 16-8)

Clamping element (p. 16-13)

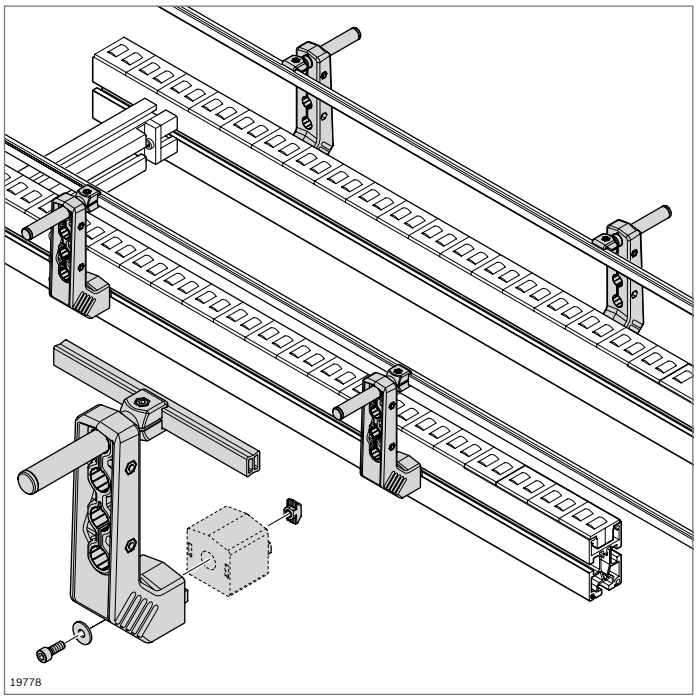

Components for lateral guides

- Wide variety of profile rail and holder combinations make customized solutions possible
- Easy to clean
- Sturdy
- Only one tool required for adjustment
- 10 mm slot interface

Mounting variants

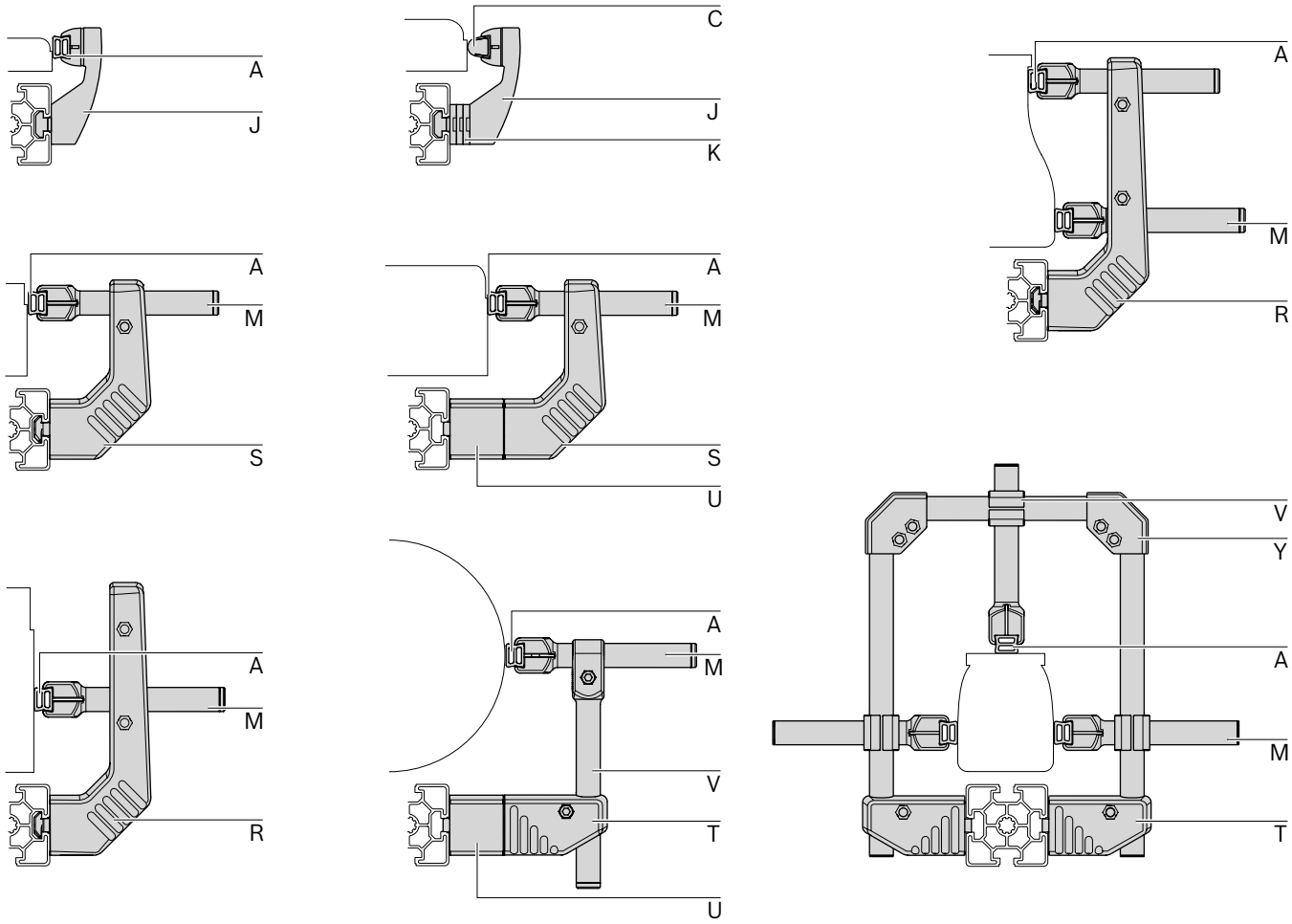

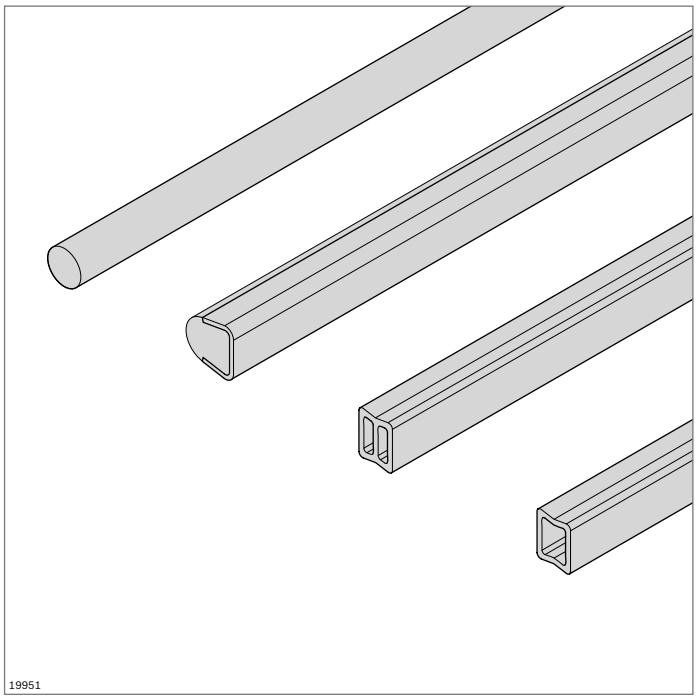

Profile rails for lateral guides

- Profile rails for lateral guiding of the transported material
- Suitable for fixed lateral guide holders (p. 16-6), and variable lateral guide holders (p. 16-8)
- Various materials and geometries for different applications

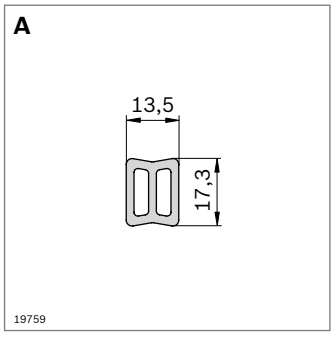

- Aluminum profile rail for robust lateral guides

Profile rail, aluminum	L (mm)	No.
1 pc	200 ... 3000	**3 842 993 887 / L**
20 pcs	3000	**3 842 538 829**

Material: Aluminum, natural, anodized

Accessories: Narrow slide rail (**E**); high slide rail (**F**); outer profile connector (**G**); inner profile connector (**H**); cover cap (**I**); clamping holder C L100 (**M**); holder (**J**); clamping head (**L**); clamping head (**O**)

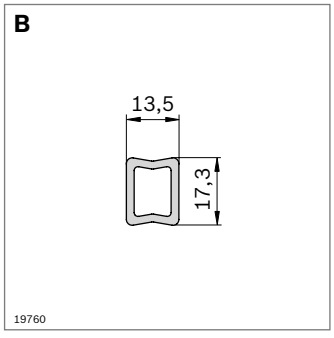

- HDPE profile rail for light applications
- Bendable

Profile rail HDPE	L (mm)	No.
1 pc	3000	**3 842 538 388**

Material: HDPE, gray

Accessories: Narrow slide rail (**E**); high slide rail (**F**); outer profile connector (**G**); inner profile connector (**H**); cover cap (**I**); clamping holder C L100 (**M**); holder (**J**); clamping head (**L**); clamping head (**O**)

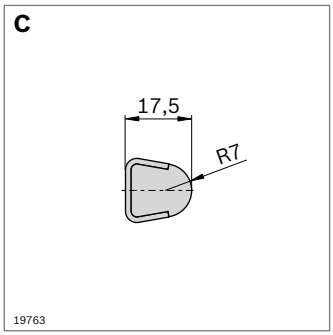

- Profile rail 17x17.5, robust stainless steel version with PE guide for gentle product handling

Profile rail 17x17.5		L (mm)	No.
1 pc		200 ... 3000	**3 842 994 863 / L**
20 pcs		3000	**3 842 529 850**

Material: Steel, stainless / PE, natural
Accessories: Outer profile connector (**G**); clamping holder C L100 (**M**); holder (**J**); clamping head (**L**); clamping head (**O**)

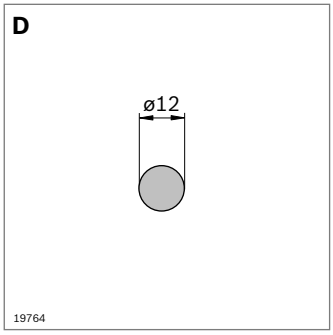

- Profile rail D12, robust stainless steel version

Profile rail D12		L (mm)	No.
1 pc		200 ... 3000	**3 842 993 306 / L**
6 pcs		3000	**3 842 533 841**

Material: Steel; stainless
Accessories: Clamping holder D12 L100 (**N**)

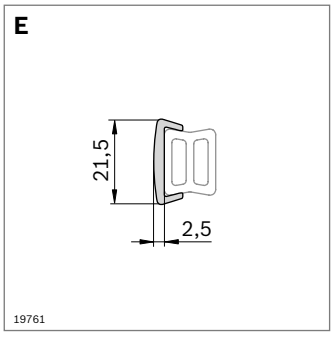

- Slide rail for clipping on to aluminum or HDPE profile rail
- For gentle product conveying and minimum wear of the HDPE profile rail

Slide rail, narrow	L (mm)	ESD	No.
	3000		**3 842 538 209**
	3000	ESD	**3 842 539 340**

Material: HDPE, gray
ESD: PE-UHMW, conductive, black

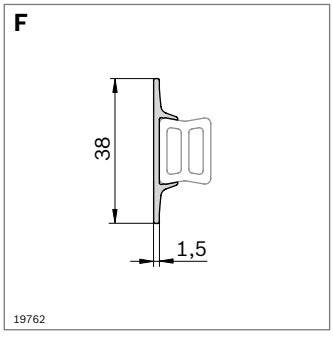

- Slide rail for clipping on to aluminum or HDPE profile rail
- Wide guiding surface
- For gentle product conveying and minimum wear of the HDPE profile rail

Slide rail, high	L (mm)	No.
	3000	**3 842 538 389**

Material: HDPE, gray

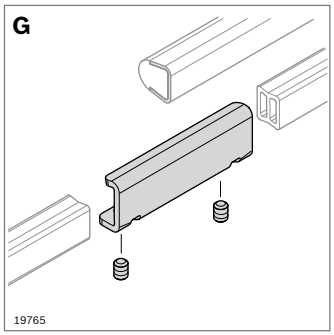

- Outer profile connector for aluminum profile rails(**A**), HDPE profile rail (**B**), 17x17.5 profile rail (**C**)

Outer profile connector		**No.**
	10	**3 842 539 613**

Material: Steel; stainless
Scope of delivery: Incl. 2 x grub screws

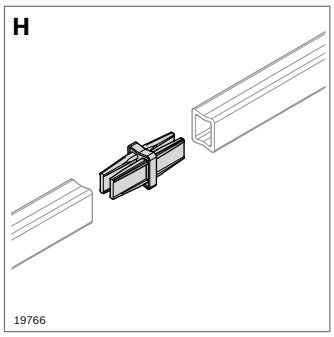

- Inner profile connector for aluminum profile rail (**A**), HDPE profile rail (**B**)

Inner profile connector		**No.**
	10	**3 842 539 345**

Material: PA, black; conductive

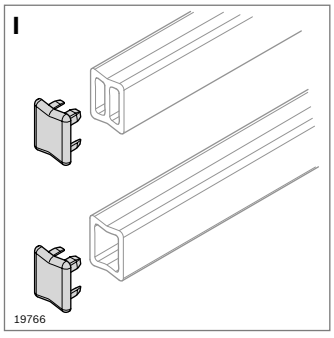

- Cover cap for aluminum profile rail (**A**), HDPE profile rail (**B**)

Cover cap		**No.**
	10	**3 842 538 208**

Material: PA, black; conductive

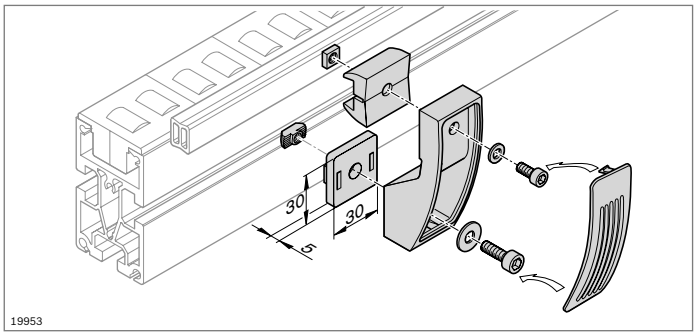

Lateral guide holder, fixed

- Holder for lateral guides of fixed installation height and fixed guide width

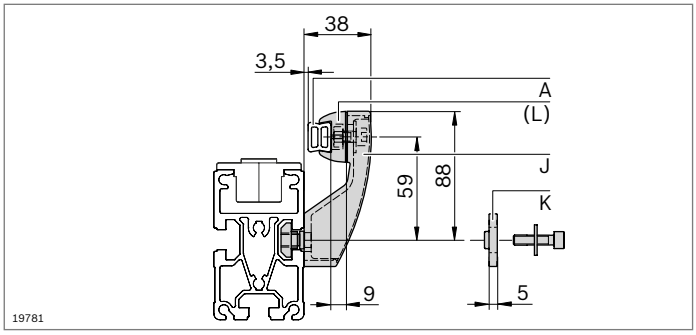

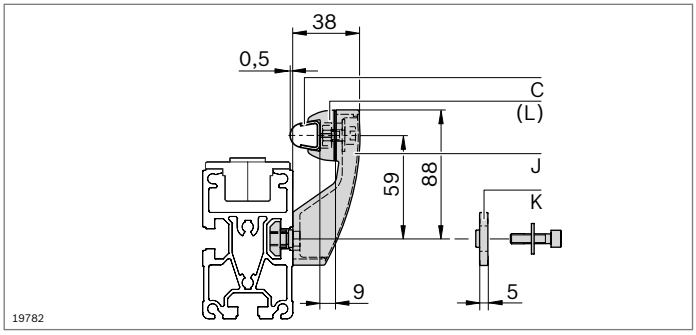

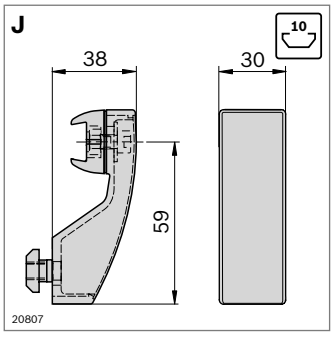

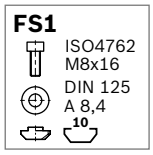

- Holder, fixed, for aluminum profile rail (**A**), HDPE profile rail (**B**) and 17x17.5 profile rail (**C**)
- For fixed guide width
- Guide width increased through use of spacer plate (**K**)

Holder, fixed		No.	FS
Set		**3 842 527 851**	FS1
Material:	PA, black Fastening material: steel; galvanized		
Scope of delivery:	Incl. clamping head, fastening material (FS)		

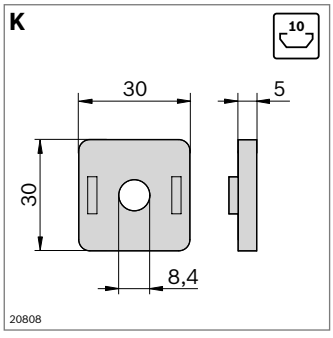

- Spacer plate for fixed holders, for increasing guide width

Spacer plate		No.
	10	**3 842 527 738**
Material:	PA; black	

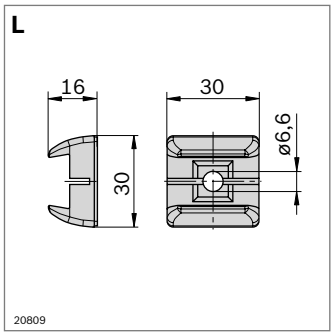

- Clamping head for on-site construction of supports for protruding transported material

Clamping head		**No.**	**FS**
Set	10	**3 842 536 295**	FS2

Material: PA, black
Fastening material: steel; galvanized
Scope of delivery: Incl. fastening material (FS)

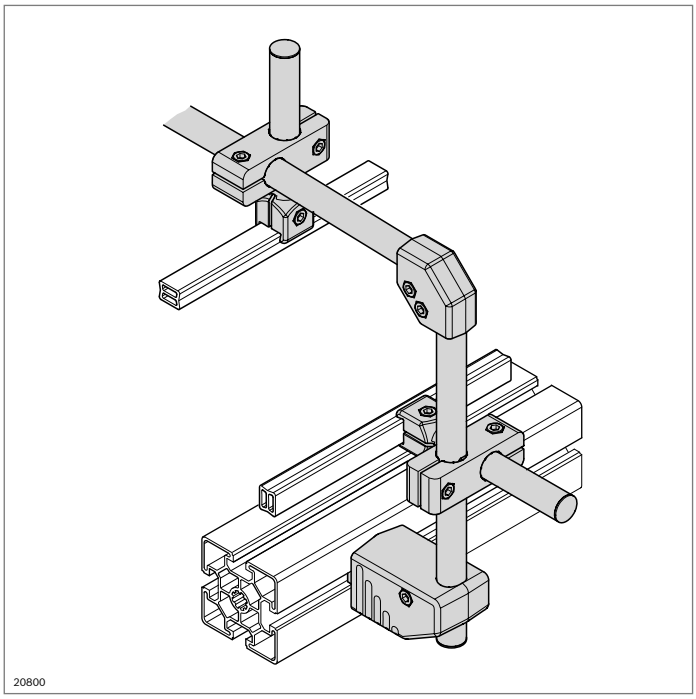

Lateral guide holder, variable

- Holders and clamping holders make variable adjustment of the guide height and width possible
- Easy to clean

Note: For stability in the direction of rotation, at least 2 holders must be connected with a continuous profile rail.

System dimensions

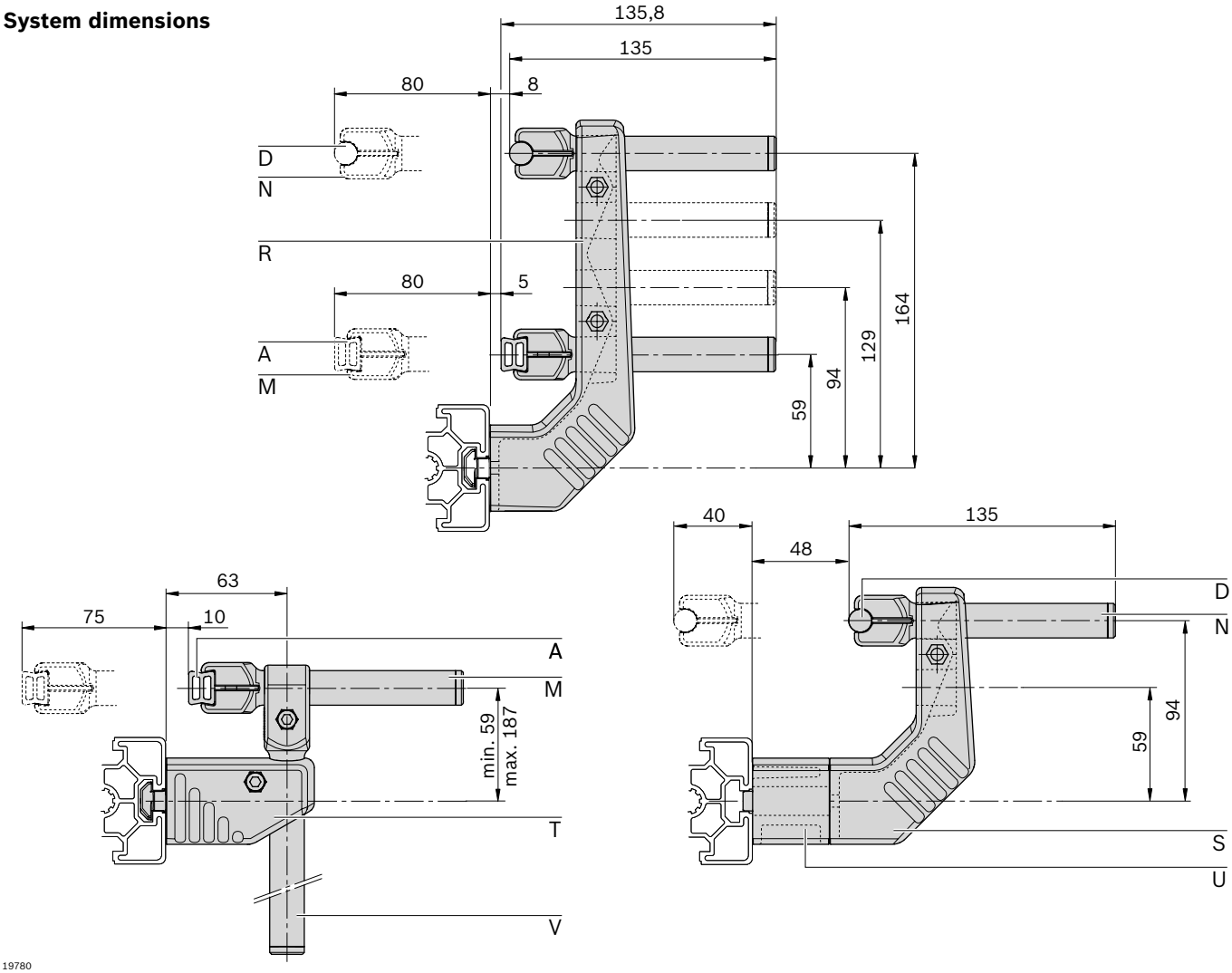

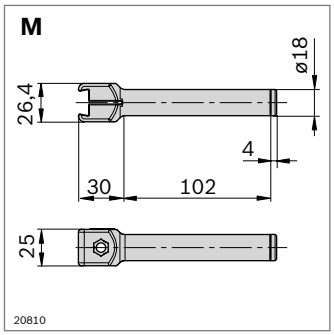

- Clamping holder C L100 for supporting aluminum (**A**), HDPE (**B**) or 17x17.5 (**C**) profile rails
- Scaling in mm and inches for simple alignment

Clamping holder C L100		**No.**
	10	**3 842 539 499**

Material: Clamping holder: PA; black
Nut, bolt: steel; stainless
Accessories: Plug (**X**)

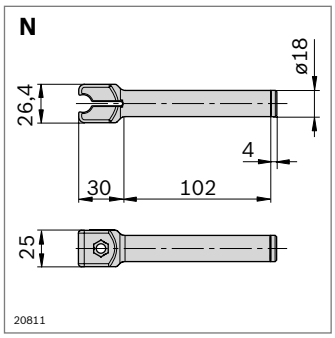

- Clamping holder D12 for supporting profile rails D12 (**D**)
- Scaling in mm and inches for simple alignment

Clamping holder D12 L100		**No.**
	10	**3 842 539 498**

Material: Clamping holder: PA; black
Nut, bolt: steel; stainless
Accessories: Plug (**Z**)

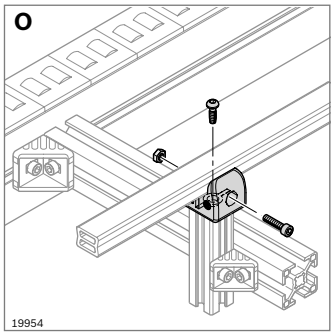

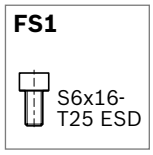

- Clamping head for supporting aluminum (**A**), HDPE (**B**) profile rails, or stainless steel profile rails with PE guide (**C**)
- Direct mounting on profiles with 10 mm slot

Clamping head		**No.**	**FS**
Set	10	**3 842 528 009**	FS1

Material: Clamping holder: PA, black
Fastening material: steel; galvanized
Scope of delivery: Incl. fastening material (FS)

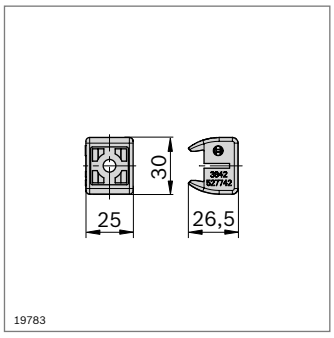

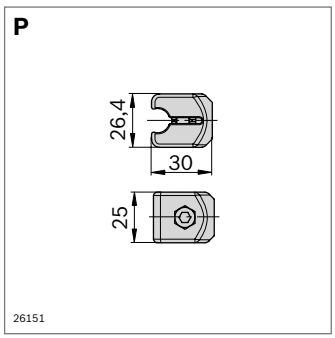

- Clamping holder D12 for supporting profile rails D12 (**D**)
- In conjunction with tube 18 (**W**) for constructing longer clamping holders

Clamping holder D12		**No.**
P	10	**3 842 547 227**

Material: Clamping holder: PA; black
Nut, bolt: steel; stainless
Accessories: Plug (**Z**), tube D18 (**W**)

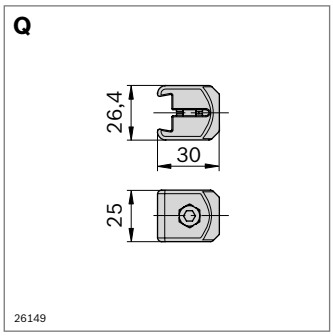

- Clamping holder C for supporting aluminum (**A**), HDPE (**B**) or 17x17.5 (**C**) profile rails
- In conjunction with tube 18 (**W**) for constructing longer clamping holders

Clamping holder C		No.
N	10	**3 842 547 228**

Material: Clamping holder: PA; black
Nut, bolt: steel; stainless
Accessories: Plug (**Z**), tube D18 (**W**)

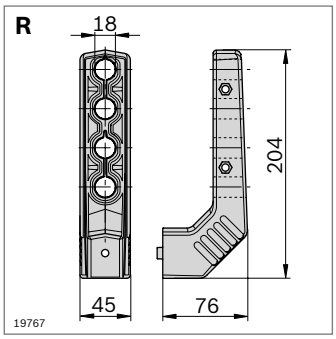

FS2
DIN 912 M6x16
DIN 9021 A 6,4

- Holder for fastening clamping holders C L100 (**M**) or D12 L100 (**N**)
- Various installation heights possible for clamping holders
- Variable guide widths possible
- Use spacer (S) for added enlargement of guide width (**U**)

Holder L204	No.	FS
Set	**3 842 539 494**	FS2

Material: PA, black
Fastening material: steel; stainless
Scope of delivery: Incl. fastening material (FS)
Accessories: T-nut M6, 10 mm slot (p. 3-4)
Spacer (**U**)

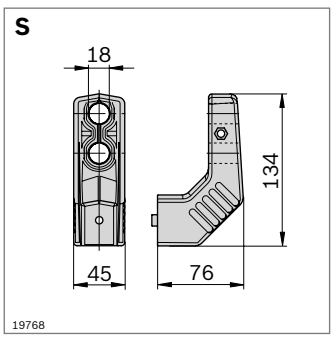

FS2
DIN 912 M6x16
DIN 9021 A 6,4

- Holder for fastening clamping holders C L100 (**M**) or D12 L100 (**N**)
- Various installation heights possible for clamping holders
- Variable guide widths possible
- Use spacer (S) for added enlargement of guide width (**U**)

Holder L134	No.	FS
Set	**3 842 539 495**	FS2

Material: PA, black
Fastening material: steel; stainless
Scope of delivery: Incl. fastening material (FS)
Accessories: T-nut M6, 10 mm slot (p. 3-4)
Spacer (**U**)

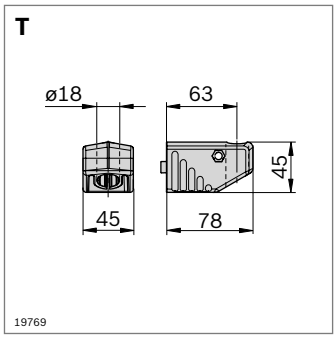

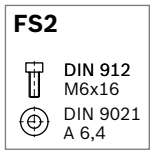

- Holder L45 for fastening vertical clamping holders or tube D18 (**W**)
- For infinitely height-adjustable lateral guides
- Guide width increased by using the spacer (**U**)

Holder L45		**No.**	**FS**
Set	10	**3 842 539 496**	FS2

Material: PA, black
Fastening material: steel; stainless
Scope of delivery: incl. fastening material (FS)
Accessories: T-nut M6, 10 mm slot (p. 3-4)
Spacer (**U**)

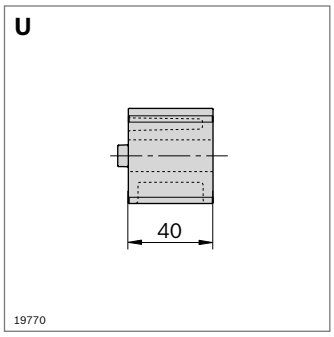

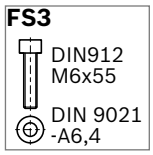

Spacer		**No.**	**FS**
Set	10	**3 842 539 497**	FS3

Material: PA, black
Fastening material: steel; stainless
Scope of delivery: Incl. fastening material (FS)

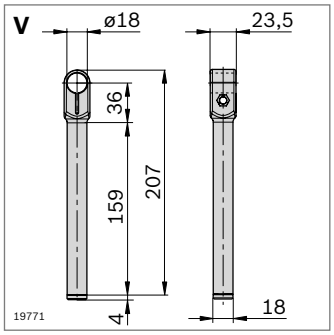

- Vertical clamping holder for constructing height-adjustable guides

Vertical clamping holder D18 L160		**No.**
	10	**3 842 539 500**

Material: PA, black
Nut, screw: steel; stainless
Accessories: Plug (**Z**)

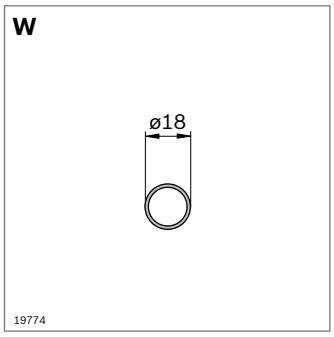

- Tube D18 for the construction of height-adjustable vertical holders or cross members for upper guides

Tube D18	**L** (mm)	**No.**
	3000	**3 842 539 339**

Material: Stainless steel
Accessories: Plug (**Z**)

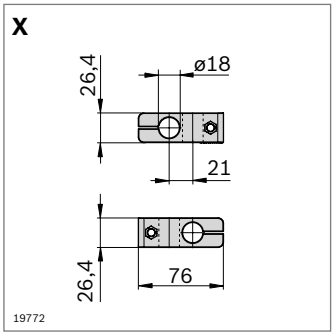

- Crosspiece for intersecting, perpendicular connections of tubes D18 (**W**) and clamping holders C L100 (**M**) or D12 L100 (**N**)

Crosspiece		**No.**
	10	**3 842 539 501**
Material:	Crosspiece: PA, black Nut, screw: steel; stainless	

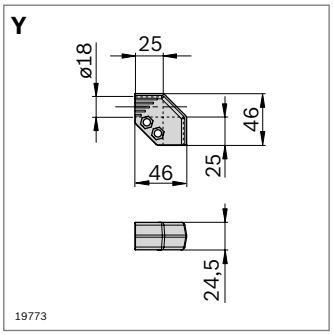

- Corner piece for end-to-end, perpendicular connections of tubes D18 (**W**) and clamping holders C L100 (**M**) or D12 L100 (**N**)

Corner piece		**No.**
	10	**3 842 539 505**
Material:	Corner piece: PA, black Nut, screw: steel; stainless	

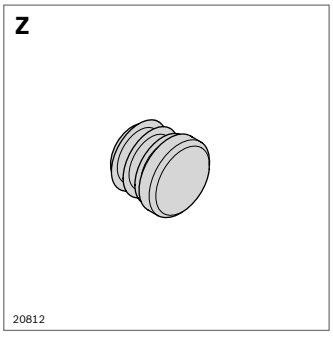

- Plug for sealing clamping holder C L100, (**M**), clamping holder D12 L100 (**N**), vertical clamping holder D18 L160 (**V**) or tube D18 (**W**)

Plug		**No.**
	10	**3 842 539 826**
Material:	PA; black	

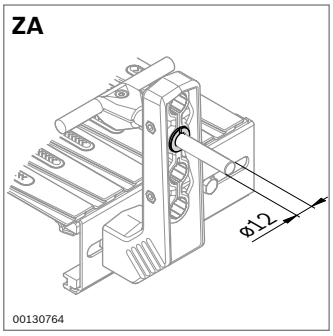

- Reducing adapter for accommodating round profiles ø 12 in D18 mountings

Reduction piece		**No.**
	20	**3 842 539 344**
Material:	PA; black	

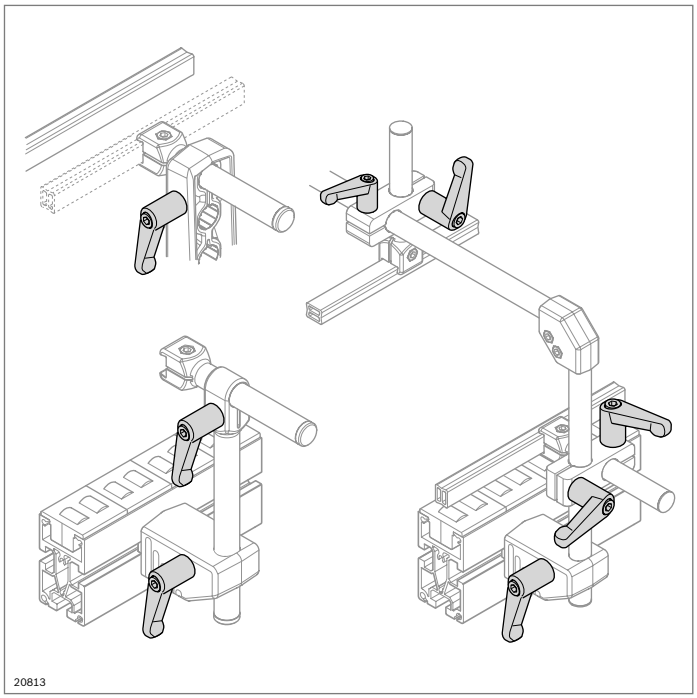

Clamping lever

- For easy adjustment of lateral guide holders
- Clamping lever M6x25 for crosspiece
- Clamping lever M6x40 for holder

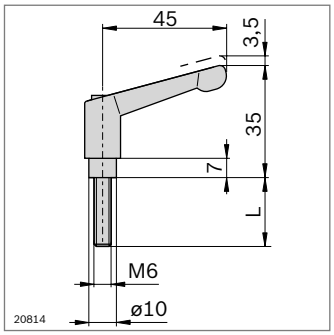

Clamping lever	L (mm)	No.
M6x25	25	**3 842 528 540**
M6x40	40	**3 842 528 539**

Material: Lever: diecast zinc; black plastic coated
Screws: steel, galvanized and black chrome-plated

Components for ESD applications

Set of grounding components (p. 17-2)

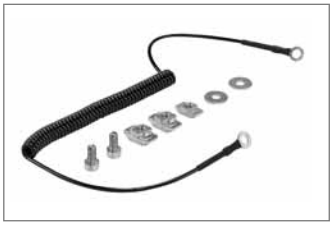

Grounding cable (p. 17-2)

Potential fix (p. 17-3)

Wrist band, connection piece (p. 17-3)

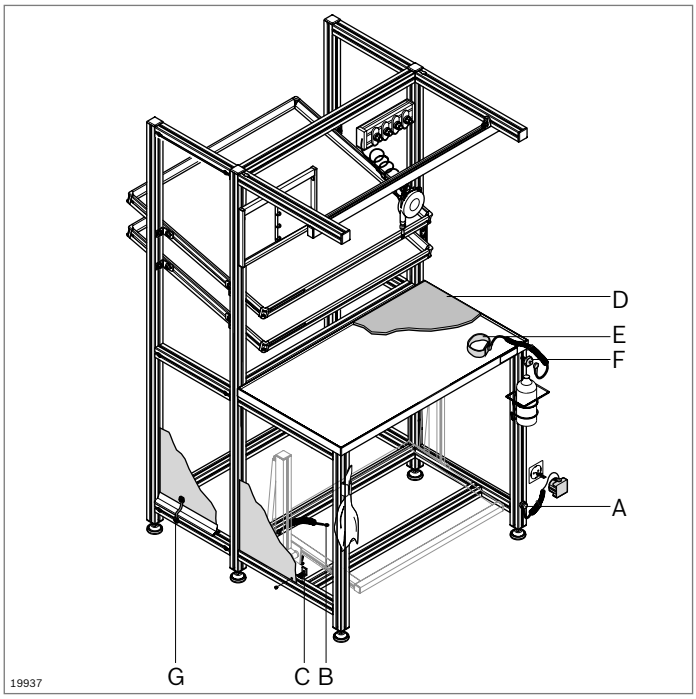

Components for ESD applications

ESD – Electro Static Discharge
Components which, due to their electrical properties and inner structure, are damaged or destroyed by static discharge also cause economic losses running into millions of euros each year.
You can use Rexroth components for ESD applications to protect your products from this type of damage.
Look for the ESD mark when selecting products (⚠).

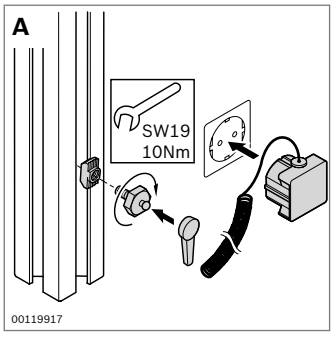

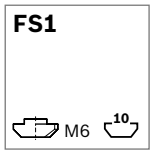

- Set of grounding components for defined grounding of ESD workstations
- Conduction resistance R_A = 1 x 10^6 Ω (DIN EN 61340-5-1)

Accessories:
Damping ring or damping plate for insulation from conductive floors makes defined conduction possible (p. 6-4, 6-6)

Set of grounding components	ESD	No.	FS
A	⚠	**3 842 522 087**	FS1

Material: Fastening material: steel; galvanized
Scope of delivery: Incl. fastening material (FS)

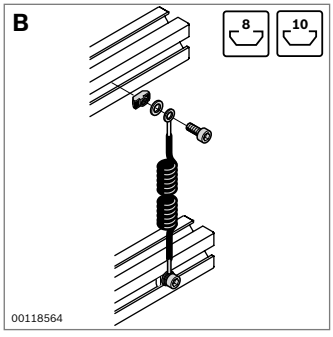

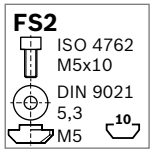

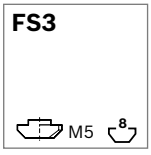

- Grounding cable to create defined conductive paths between strut profiles in order to protect ESD-sensitive components

Grounding cable	ESD	No.	FS
B	⚠	**3 842 519 465**	2xFS2, FS3

Material: Fastening material: steel; galvanized
Scope of delivery: Incl. fastening material (FS)

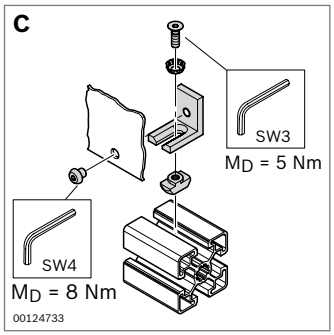

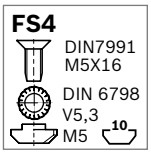

- Potential fix for defined grounding of surface elements such as side panels

Potentialfix	ESD	No.	FS
C		**3 842 536 320**	FS4, FS5

Material: Bracket: aluminum
Fastening material: steel; galvanized
Scope of delivery: Incl. fastening material (FS)

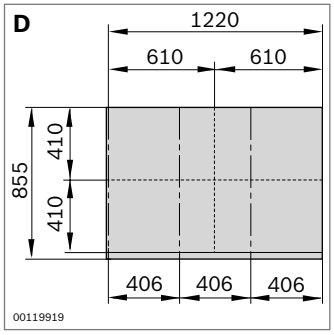

- ESD mat insert for protecting ESD-sensitive components
- To create a safe, conductive connection, e.g. to ESD material shelves, we recommend using adhesive copper tape
- Conduction resistance R_A = 1 x 10^6 – 1 x 10^9 Ω according to DIN EN 61340-5-1

ESD mat insert	ESD	No.
D 1220 mm x 855 mm		**3 842 522 012**

Material: Rubber (thickness: 2 mm)

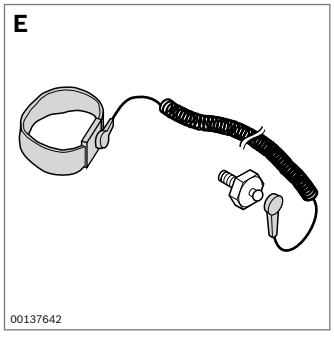

- Wrist band for defined grounding of people and protection of ESD-sensitive components

Accessories, required:
- connection piece
- T-nut M6, or sliding block, swivel-in with spring, M6

Wrist band	ESD	No.
E		**3 842 516 908**

Material: Textile with woven-in conductive plastic, navy blue

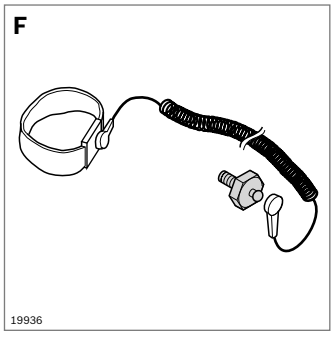

- Connection piece for connecting the wrist band to the profile construction

Connection piece	ESD		No.
F		10	**3 842 516 905**

Material: Steel; galvanized

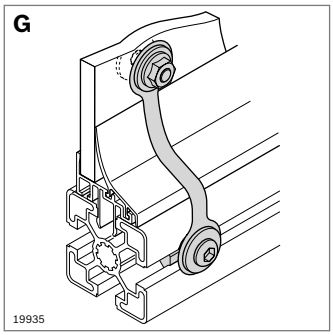

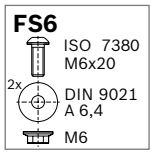

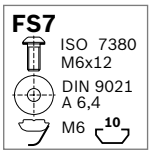

- Potential equalizer for creating electrostatic conduction between surface elements and strut profiles

Potential equalizer	ESD		No.	FS
G		10	**3 842 536 148**	FS6, FS7

Material: Strip steel, stainless
Fastening material: steel; galvanized

Scope of delivery: Incl. fastening material (FS)

Proximity switches and switch brackets

SH 1/S (p. 18-2)

SH 1/U (p. 18-3)

SH 2/S, SH 2/ST (p. 18-4)

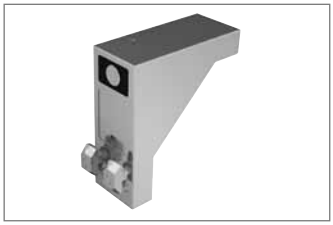

SH 2/S-H (p. 18-5)

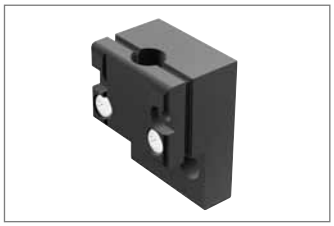

SH 2/U (p. 18-7)

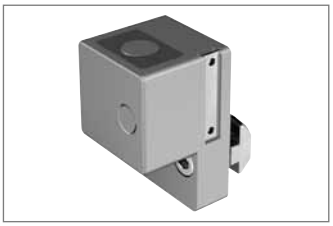

SH 2/U-H (p. 18-7)

Proximity switch (p. 18-8)

Stop (p. 18-10)

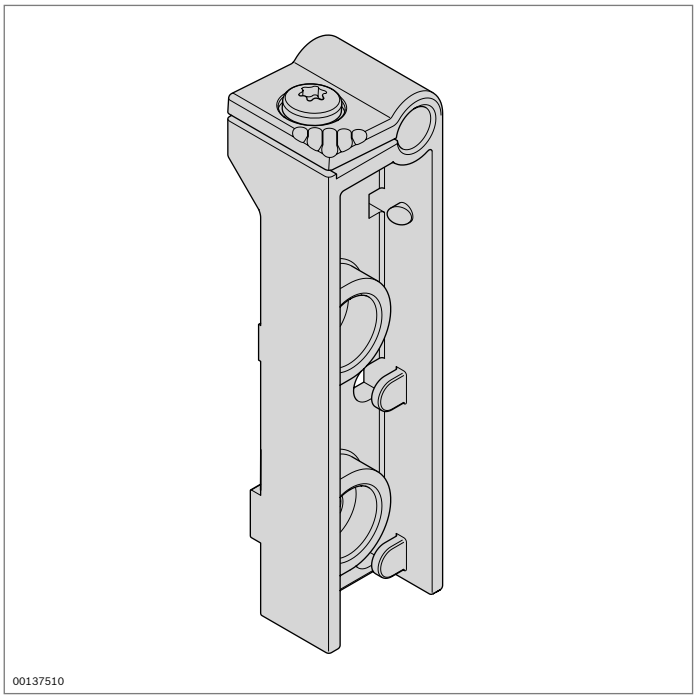

Switch bracket SH 1/S

- For fastening a proximity switch Ø 6.5 mm

Accessories, required:
proximity switch Ø 6.5 mm (p. 18-8)

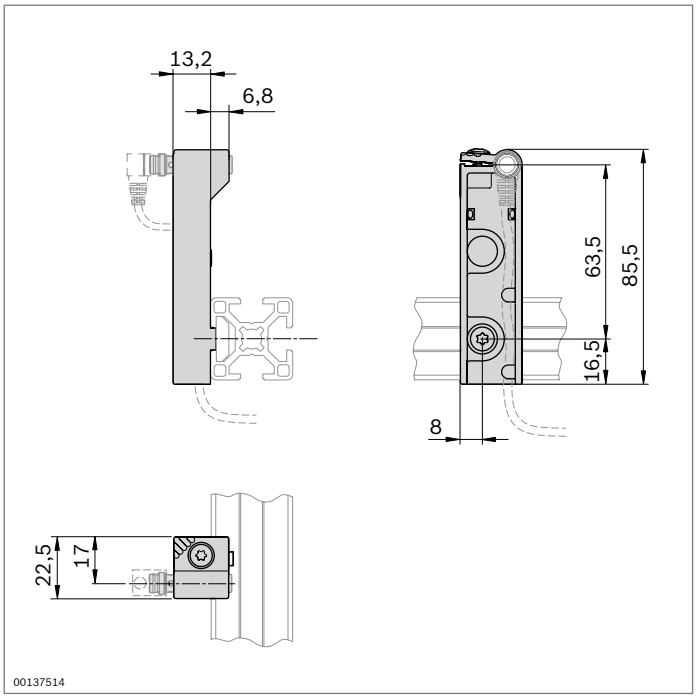

Switch bracket	ESD	No.	FS
SH 1/S	ESD	**3 842 542 556**	FS1

Material: SH 1/S: PE 6.6, black
Fastening material: steel; galvanized
Scope of delivery: Incl. fastening material (FS)

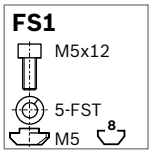

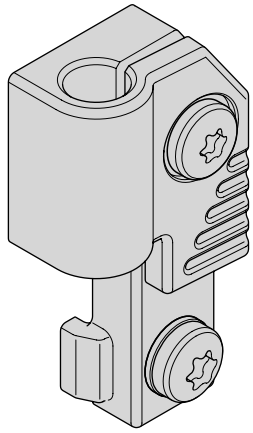

00137511

Switch bracket SH 1/U

- For fastening a proximity switch Ø 6.5 mm

Accessories, required:
proximity switch Ø 6.5 mm (p. 18-8)

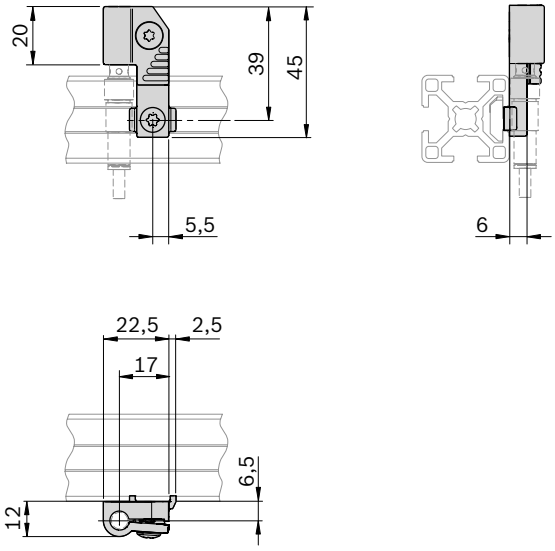

00137515

Switch bracket	ESD	No.	FS
SH 1/U	ESD	**3 842 542 555**	FS1

Material: SH 1/U: PE 6.6, black
Fastening material: steel; galvanized
Scope of delivery: Incl. fastening material (FS)

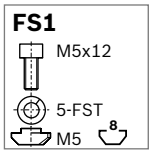

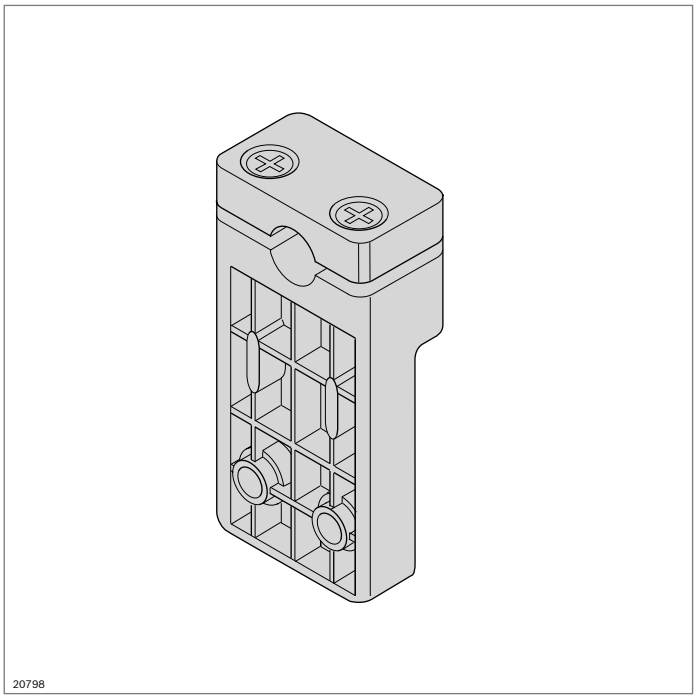

Switch bracket SH 2/S, SH 2/ST

- For fastening a proximity switch M12x50
- SH 2/ST: switch cover to protect switches and cables

Accessories, required:
proximity switch M12x50 (p. 18-9)

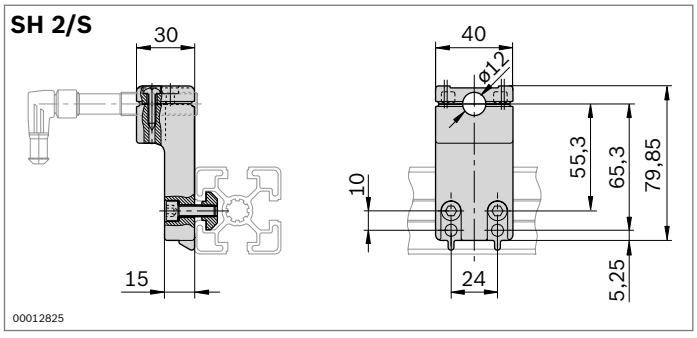

Switch bracket	No.	FS
SH 2/S	**3 842 168 830**	2xFS1

Material: Housing: PA6, black
Switch cover (30 mm): PA6, black
Fastening material: steel; galvanized

Scope of delivery: Incl. fastening material (FS)

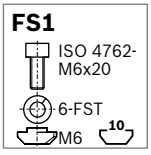

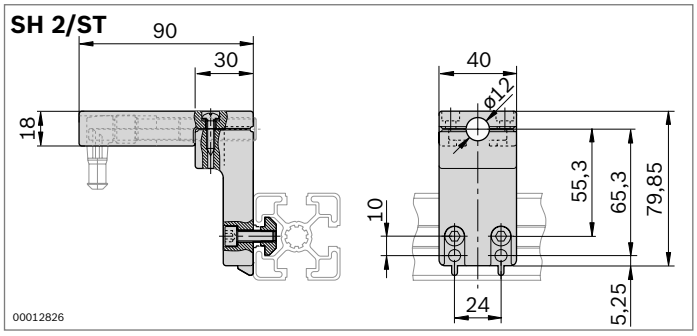

Switch bracket	No.	FS
SH 2/ST	**3 842 168 850**	2xFS1

Material: Housing: PA6, black
Switch cover (90 mm): ABS, transparent
Fastening material: steel; galvanized

Scope of delivery: Incl. fastening material (FS)

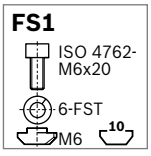

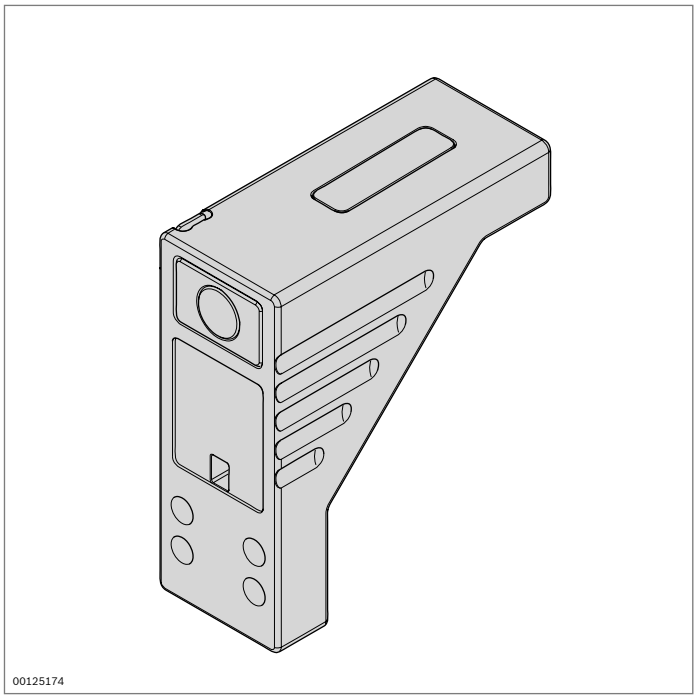

Switch bracket SH 2/S-H

- For fastening a proximity switch M12x50
- Especially sturdy metal version
- Able to bear loads of up to 100 kg
- Centering lugs for pre-positioning and fast assembly in the profile slot
- Integrated stop for 12 mm sensor
- Integrated cable guide

Accessories, required:
proximity switch M12x50 (p. 18-9)

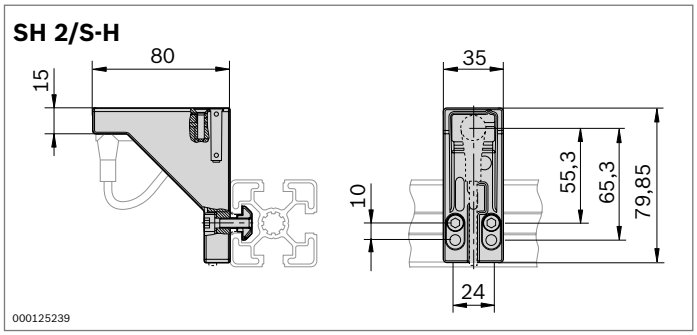

Switch bracket	No.	FS
SH 2/S-H	**3 842 537 280**	2xFS1

Material: SH 2/S-H: diecast aluminum
Fastening material: steel; galvanized
Scope of delivery: Incl. fastening material (FS)

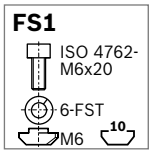

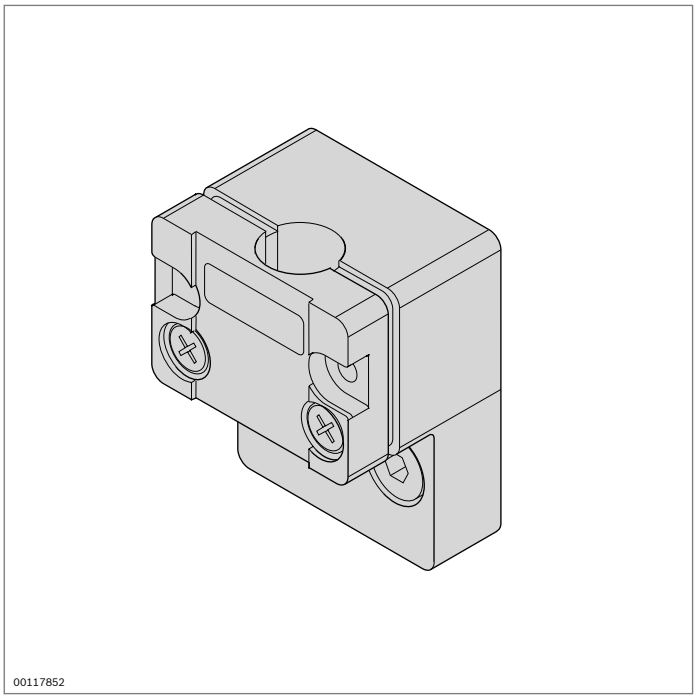

Switch bracket SH 2/U

- For fastening a proximity switch M12x50

Accessories, required:
proximity switch M12x50 (p. 18-9)

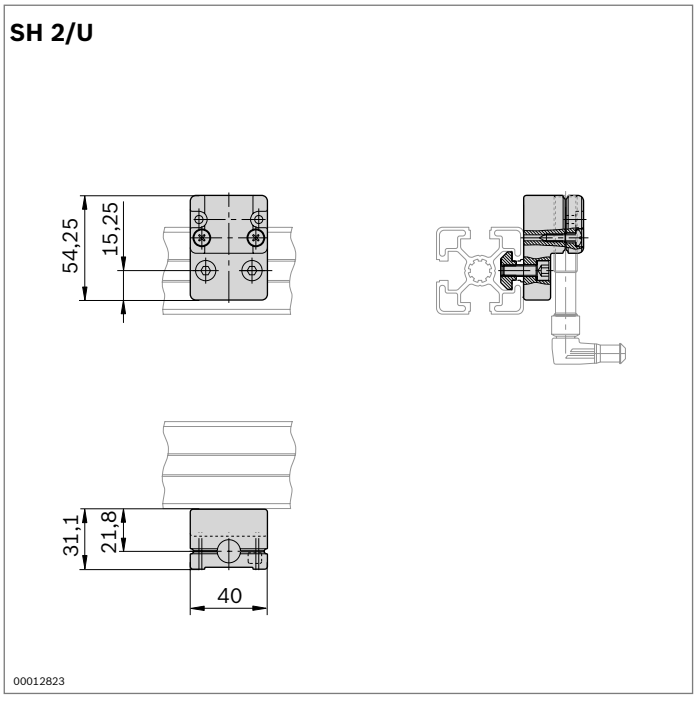

Switch bracket	No.	FS
SH 2/U	**3 842 168 820**	2xFS1, 2xFS2

Material:	SH 2/U: PA6 granulate, black Fastening material: steel; galvanized
Scope of delivery:	Incl. fastening material (FS)

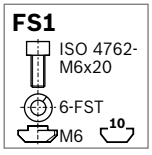

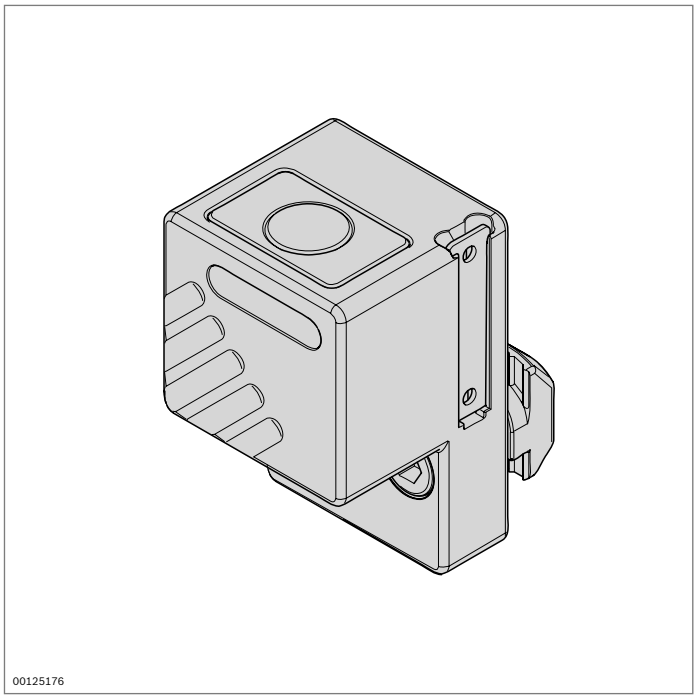

Switch bracket SH 2/U-H

- For fastening a proximity switch M12x50
- Especially sturdy metal version
- Able to bear loads of up to 100 kg
- Centering lugs for pre-positioning and fast assembly in the profile slot
- Integrated stop for 12 mm sensor

Accessories, required:
proximity switch M12x50 (p. 18-9)

SH 2/U-H

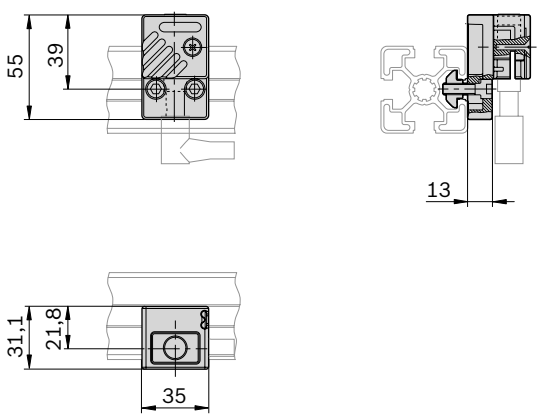

Switch bracket		No.	FS
SH 2/U-H		**3 842 537 289**	2xFS1
Material:	SH 2/U-H: diecast aluminum Fastening material: steel; galvanized		
Scope of delivery:	Incl. fastening material (FS)		

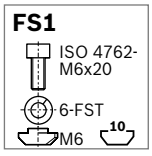

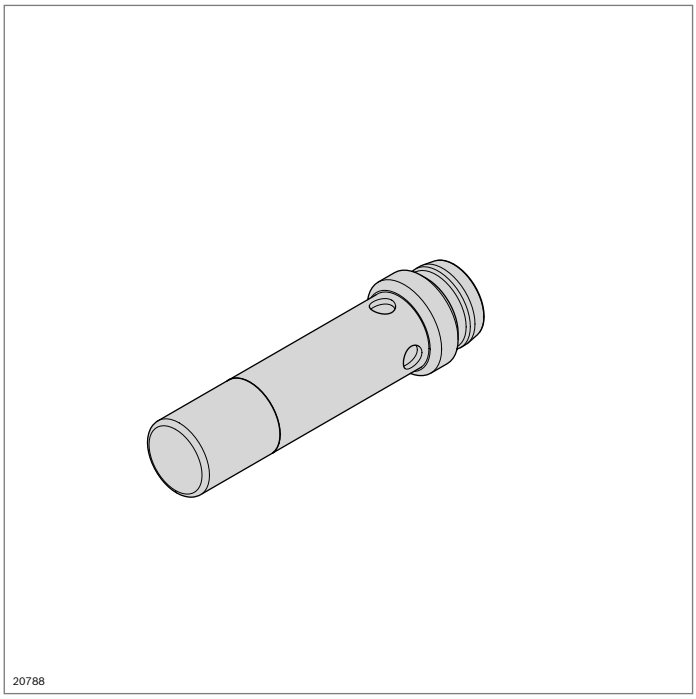

Proximity switch Ø6.5 x 30 mm, inductive

- For installation in switch bracket SH 1/...
- Design:
  - PNP contact
  - Optical LED function display
  - Compact length of 30 mm; Ø 6.5 mm
  - M8 plug connection
  - Switch distance S_N = 4 mm
  - Operating voltage: 0 ... 30 V
  - Switching frequency 1500 Hz
  - Operating current 200 mA
  - Protection class IP 67
  - Ambient temperature: -20 to 70 °C

Accessories, required:
switch bracket SH 1/... (p. 18-2f)

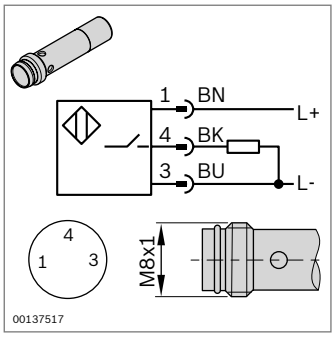

Proximity switch		No.
Ø 6.5 x 30 mm		**3 842 542 500**
Material:	Brass, nickel-plated	

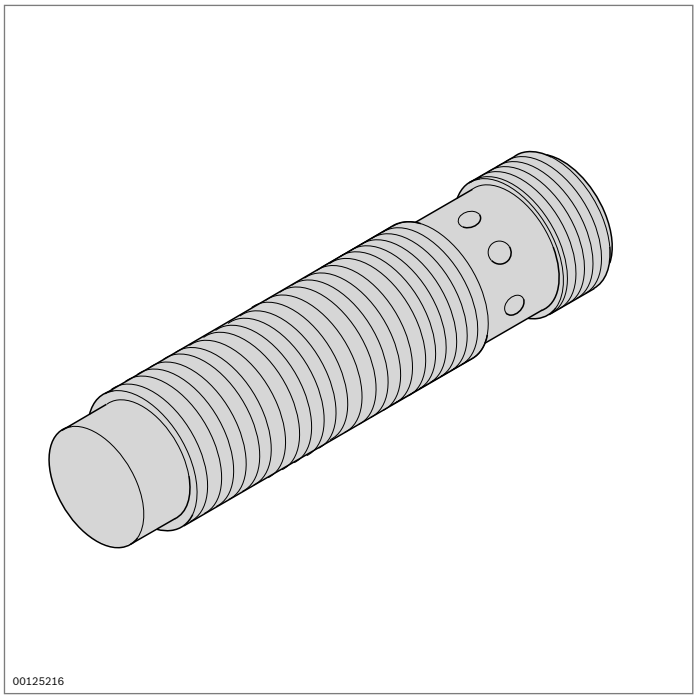

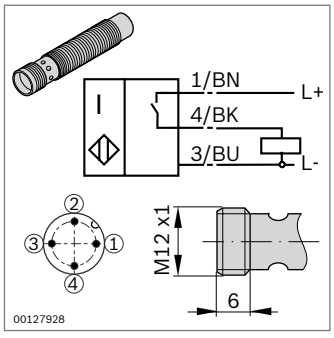

Proximity switch M12x50, inductive

- For installation in switch bracket SH2/...
- Design:
  - PNP contact according to IEC/EN 60947-5-2-2004
  - Connection via V1 plug (M12)
  - Resistant to media such as test oil and test fuel
  - Optical LED function display
  - Gold-plated contacts
  - Compact length of 50 mm
  - Metal thread M12x1
  - Switch distance S_N = 7 mm
  - Operating voltage: 0 ... 30 V
  - Switching frequency: 300 Hz
  - Operating current: 150 mA
  - No-load current: max. 15 mA
  - Protection class: IP 67
  - Ambient temperature: -25 to 70 °C

Accessories, required:
switch bracket SH 2/... (p. 18-4ff)

Proximity switch		No.
M12 x 50 mm		**3 842 537 995**
Material:	Brass, nickel-plated	

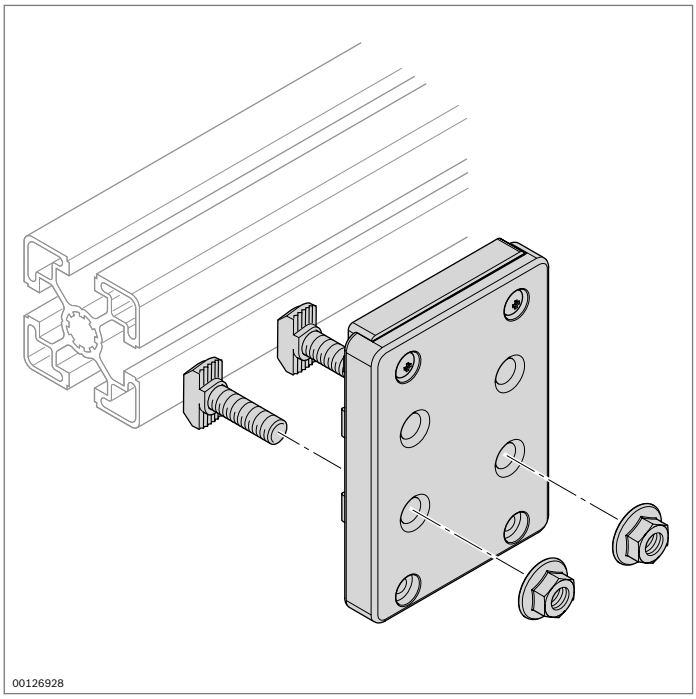

Stop

- Can be mounted on profiles with 10 mm slot
- Centering aid can be broken off for flexible installation

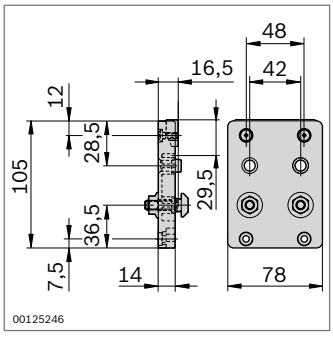

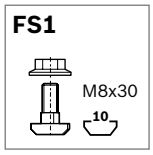

Stop	ESD	No.	FS
		3 842 519 717	2xFS1

Material: Stop: PA6
Fastening material: steel; galvanized

Scope of delivery: Incl. fastening material (FS)

Technical data

Technical data for strut profiles

EN AW – Al MgSi		Material designation according to DIN EN 573 for Rexroth strut profiles
EN AW – 6060		Material number according to DIN EN 573
R_m	= 245 N/mm²	Minimum tensile strength (in direction of pressure)
$R_{p0,2}$	= 195 N/mm²	0.2% proof stress (in direction of pressure)
A_5 A_{10}	= 10% = 8%	Ductile yield A_5 or A_{10}
E	= 70000 N/mm²	Modulus of elasticity E
75 HB		Brinell hardness
$\alpha_{(-50...+20\ °C)}$ $\alpha_{(+20...100\ °C)}$	= 21.8 x 10^{-6} 1/K = 23.4 x 10^{-6} 1/K	Longitudinal expansion coefficient

μ	= 0.34	Poisson's ratio
E6/EV1 - 12 μm - 300 HV		Anodizing process – layer thickness – layer hardness

Permitted dimensional tolerance t (mm) for profiles from different deliveries

L_{max}	11-20	22.5-30	40	45-60
t	≥0.15	≥0.2	+0.6	≥0.3

L_{max}	80	90	120	160
t	+0.8	≥0.4	+1.0	+1.6

L_{max}	180	270	360
t	≥0.6	≥1.0	≥1.5

L2	6	8	10
t	+0.3	+0.3	+0.4

Ø	5.5	7.3	10	15
t	-0.1 +0.2	-0.1 +0.2	≥0.15	≥0.15

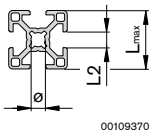

Deviation limits and form tolerances according to DIN EN 12020-2
Rexroth profiles generally fall well within the generally applicable tolerances specified in the standard. They are specifically defined for the individual products.

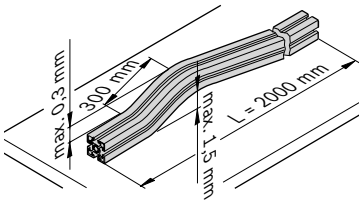

Longitudinal straightness tolerance of profile

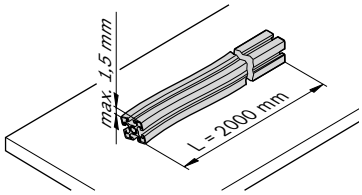

Longitudinal torsional tolerance of profile

Profile deflection

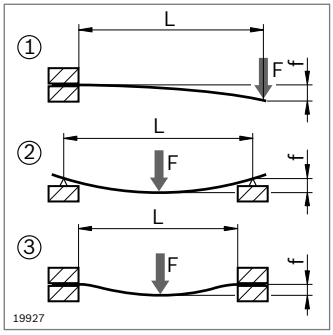

$f_{①} = \frac{F \times L^3}{3\ E \times I \times 10^4}$ $f_{②} = \frac{F \times L^3}{48\ E \times I \times 10^4}$ $f_{③} = \frac{F \times L^3}{192\ E \times I \times 10^4}$	Profile deflection due to force F for static load cases ①②③
$f_{①} = \frac{m' \times g \times L^4}{8\ E \times I \times 10^4}$ $f_{②} = \frac{5 \times m' \times g \times L^4}{384\ E \times I \times 10^4}$ $f_{③} = \frac{m' \times g \times L^4}{384\ E \times I \times 10^4}$	Profile deflection due to the profile's own weight
$\sigma_{①} = \frac{(m' \times g \times L + F) \times L}{W \times 10^3}$ $\sigma_{②} = \frac{(m' \times g \times L + F) \times L}{4\ W \times 10^3}$ $\sigma_{③} = \frac{(m' \times g \times L + F) \times L}{8\ W \times 10^3}$	Control of max. occurring bending stress $\sigma_{b\ max}$
$\sigma_{b\ max} < \sigma_{b\ zul.}$! $\sigma_{b\ zul.} = \frac{R_{p0,2}}{S_{F\ erf.}}$	$S_{F\ req}$: Safety value required to avoid deformation (flow) $\sigma_{b\ zul}$: Max. permissible bending stress

f (mm)	W (cm^3)
F (N)	E = 70000 N/mm^2
L (mm)	m' (kg/mm); m' = m/1000; m (p. 2-4 ... 2-7)
I (cm^4)	g = 9.81 m/s^2 ≈ 10 m/s^2

Profile slot load-bearing capacity

Static load limit values of slot (beginning of plastic deformation) **for connectors with the largest thread in each case**

			T-bolt	T-nut	Central bolt	Sliding block, swivel-in	Sliding block
6		20x20, 20x20R 10x40 20x40, 20x60 20x40x40	1700 N	1700 N	2000 N	–	3000 N
8	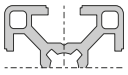	30x30, 30x30R 30x30°, 30x45°, 30x60° 11x20, 15x120 30x45, 30x60, 30x60x60 30x90, 30x120	4000 N	4000 N	5000 N	2200 N	6000 N
10	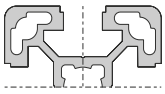	90x90SL 40x40L, 40x40L R 40x30°, 40x45°, 40x60° 40x80L, 40x120L, 40x160L 40x80x80L 80x80L 80x120L, 80x160L 45x45L, 45x45L R 45x30°, 45x45°, 45x60° 15x22,5 , 15x180, 22,5x45 45x90L, 45x90x90L 50x50L, 50x50L R 50x100L , 50x150L 100x100L ,100x200L 60x60L	6000 N 7000 N	6000 N 7000 N	9000 N 10000 N	8000 N 9000 N	11000 N 12000 N
	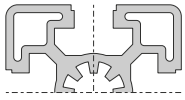	45x45 60x60 90x90L 22,5x180 45x60 45x90 , 45x180 90x180L	12000 N	12000 N	15000 N	13000 N	17000 N
	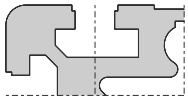	45x270 60x90 90x90 90x180 90x360	18000 N	18000 N	22000 N	18000 N	24000 N

Load-bearing capacity of profile connection

The stated tightening and loading limit values were determined as an example in (dry) trials. You must take account of legal safety factors and building regulations as well as those corresponding to accepted engineering practices!

Static load limit values of the connection (beginning of plastic deformation)

6 8 10	D	Slot		F_{max}	M_{max}
	8	6 / 6	2.5 Nm	450 N	18 Nm
	11	8 / 8	12 Nm	500 N	40 Nm
	11	8 / 10	12 Nm	2000 N	70 Nm
	17	10 / 10	25 Nm	4000 N	140 Nm
Quick connector (p. 3-51)	9.8	10 / 10	6 Nm	800 N	50 Nm

8 10		Slot		F_{max}	M_{max}	M_{max}	F_{max}	M_{max}
	30x30	8	12 Nm	1100 N	35 Nm	24 Nm	650 N	40 Nm
	40x40L	10	25 Nm	1500 N	110 Nm	100 Nm	1000 N	80 Nm
	45x45L	10	25 Nm	1500 N	120 Nm	110 Nm	1000 N	95 Nm
	45x45	10	25 Nm	1500 N	140 Nm	145 Nm	1100 N	180 Nm
	50x50L	10	25 Nm	1500 N	150 Nm	160 Nm	1100 N	180 Nm
Quick connector, bendable (p. 3-54)								

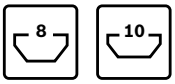		Slot				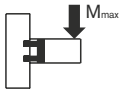	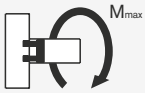
	ø11, L=30	8	↻	6 Nm	2500 N	60 Nm	20 Nm
	ø17, L=40	10	↻	25 Nm	4000 N	180 Nm	40 Nm
	ø17, L=45	10	↻	25 Nm	4000 N	180 Nm	60 Nm
	ø17, L=50	10	↻	25 Nm	4000 N	200 Nm	65 Nm
	ø17, L=60	10	↻	25 Nm	4000 N	200 Nm	80 Nm
	ø17, L=80	10	↻	25 Nm	5000 N	800 Nm	170 Nm
	ø17, L=90	10	↻	25 Nm	5000 N	800 Nm	200 Nm
	ø17, L=100	10	↻	25 Nm	5000 N	1000 Nm	480 Nm
Bolt connector (p. 3-57)	ø28, L=22.5	10	↻	25 Nm	2000 N	–	–

		Slot				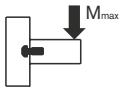	
	S6	6	↻	10 Nm	500 N	8 Nm	
	S8	8	↻	25 Nm	800 N	43 Nm	
	S12	10	↻	35 Nm	1300 N	80 Nm	
Central bolt (p. 3-38)	M12	10	↻	35 Nm	3000 N	80 Nm	

6 8 10		Slot			Mmax	Mmax/2 Mmax/2
	20/2	6	↻	10 Nm	18 Nm	
	20/3	6	↻	10 Nm		23 Nm
	30/2	8	↻	25 Nm	80 Nm	
	30/3	8	↻	25 Nm		85 Nm
	40/2	10	↻	35 Nm	60 Nm	
	40/3	10	↻	35 Nm		70 Nm
	45/2	10	↻	35 Nm	45x45L 150 Nm	
					45x45 200 Nm	
	45/3	10	↻	35 Nm	45x45L	170 Nm
					45x45	240 Nm
	50/2	10	↻	35 Nm	120 Nm	
Cubic connector (p. 3-40)	50/3	10	↻	35 Nm		140 Nm

8 10		Profile	Slot			Fmax	Mmax	Mmax
	SV8	30x...	8	↻	6 Nm	1000 N	35 Nm	15 Nm
	SV 10L	45x... L	10	↻	15 Nm	3500 N	110 Nm	30 Nm
	SV 10	40x..., 45x...	10	↻	15 Nm	3500 N	110 Nm	30 Nm
Tensioning connector (p. 3-12)		60x...	10	↻	15 Nm	3500 N	195 Nm	60 Nm

8 10	Slot			Fmax	Mmax
	8 / 8	↻	12 Nm	2200 N	50 Nm
	10 / 10	↻	15 Nm	2800 N	100 Nm
Inner bracket (p. 3-13)					

6 8 10	Slot			Fmax	Mmax
	6 / 6	↻	3 Nm	600 N	10 Nm
	8 / 8	↻	12 Nm	2500 N	50 Nm
Inner bracket R (p. 3-14)	10 / 10	↻	15 Nm	3000 N	100 Nm

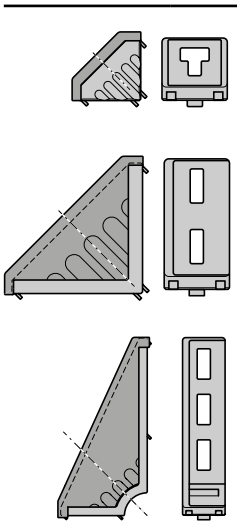

	Slot		F_{max}	M_{max}	M_{max}	M_{max}
20/20	6	3 Nm	700 N	6 Nm	25 Nm	–
20/40	6	3 Nm	1400 N	15 Nm	50 Nm	8 Nm
30/30	8	10 Nm	1250 N	25 Nm	75 Nm	–
30/60	8	10 Nm	2500 N	100 Nm	170 Nm	25 Nm
30/120	8	10 Nm	3750 N	100 Nm		47 Nm
60/60-8	8	10 Nm	5000 N	320 Nm	370 Nm	110 Nm
60/60-10	10	25 Nm	3000 N	125 Nm	150 Nm	–
40/40	10	25 Nm	3000 N	55 Nm	145 Nm	35 Nm
40/80	10	25 Nm	6000 N	180 Nm	400 Nm	60 Nm
40/160	10	25 Nm	9000 N	250 Nm		60 Nm
80/80	10	25 Nm	14000 N	500 Nm	1000 Nm	400 Nm
45/45	10	25 Nm	3000 N	60 Nm	160 Nm	–
45/90	10	25 Nm	6000 N	180 Nm	400 Nm	60 Nm
45/180	10	25 Nm	9000 N	250 Nm		65 Nm
90/90	10	25 Nm	12000 N	370 Nm	800 Nm	200 Nm
43x42	10	25 Nm	2000 N	–	160 Nm	–
50/50	10	25 Nm	4000 N	125 Nm	250 Nm	38 Nm
50/100	10	25 Nm	7500 N	300 Nm	600 Nm	73 Nm
100/100	10	25 Nm	15000 N	550 Nm	1100 Nm	480 Nm

Bracket (p. 3-17)

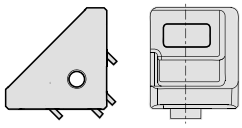

	Slot		F_{max}	M_{max}	M_{max}
S 20x20	6	2.5 Nm	700 N	3.6 Nm	25 Nm
S 30x30	8	8.5 Nm	1250 N	16 Nm	75 Nm
S 40x40	10	25 Nm	3000 N	36 Nm	160 Nm
S 45x45	10	25 Nm	3000 N	36 Nm	160 Nm

Bracket S (p. 7-8)

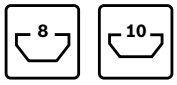		Slot			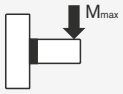
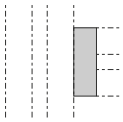	30x30	8	↻ 25 Nm (S8) / 5 Nm (M5)	4000 N	80 Nm
	40x40	10	↻ 35 Nm (S12) / 10 Nm (M6)	9000 N	150 Nm
	45x45	10	↻ 35 Nm (S12) / 10 Nm (M6)	9000 N	200 Nm
	50x50	10	↻ 35 Nm (S12) / 10 Nm (M6)	10000 N	170 Nm
T-connector (p. 3-48)					

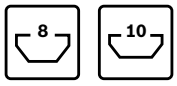				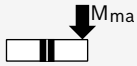
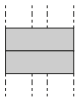	30x30	8	↻ 25 Nm (S8) / 5 Nm (M5)	81 Nm
	40x40	10	↻ 35 Nm (S12) / 10 Nm (M6)	170 Nm
	45x45	10	↻ 35 Nm (S12) / 10 Nm (M6)	200 Nm
End connector (p. 3-46)	50x50	10	↻ 35 Nm (S12) / 10 Nm (M6)	180 Nm

Profile connection load-bearing capacity with radial compensation (p. 2-83)

				Slot		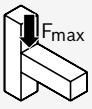	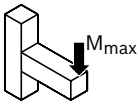	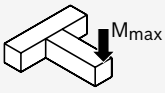
	30x30		S8	8	↻ 25 Nm	600 N	37 Nm	28 Nm
				8 / 8	↻ 12 Nm	600 N	37 Nm	28 Nm
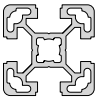	40x40		M12 S12	10	↻ 30 Nm	1000 N	47 Nm	55 Nm
				10 / 10	↻ 22 Nm	1000 N	47 Nm	55 Nm
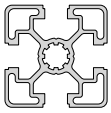 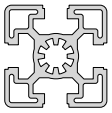	45x45		S12 M12	10	↻ 35 Nm	1200 N	53 Nm	59 Nm
				10 / 10	↻ 25 Nm	1200 N	53 Nm	59 Nm

Load-bearing capacity data for EcoSafe protective frames and EcoSafe supports

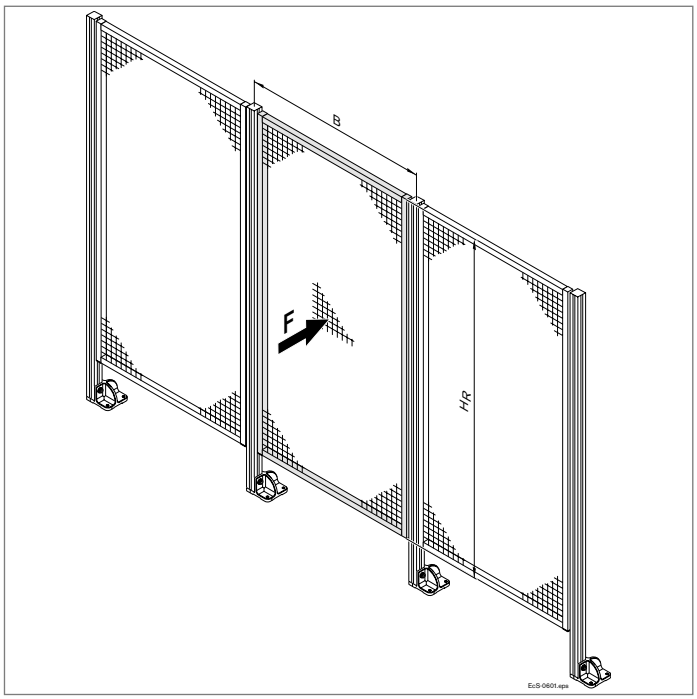

EcoSafe protective frames withstand high loadings. The permissible forces which act on the protective grille have been determined in series of tests.
Test structure: In the case of a protective fence consisting of 3 frames, the woven wire grille in the middle frame is exposed to a maximum load force acting on its center.

Protective frame	**HR** (mm)	**B** (mm)	**F** (N)	**No.**
	1800	750	1650	**3 842 554 283**
	1800	1000	1100	**3 842 554 284**
	1800	1500	800	**3 842 554 285**

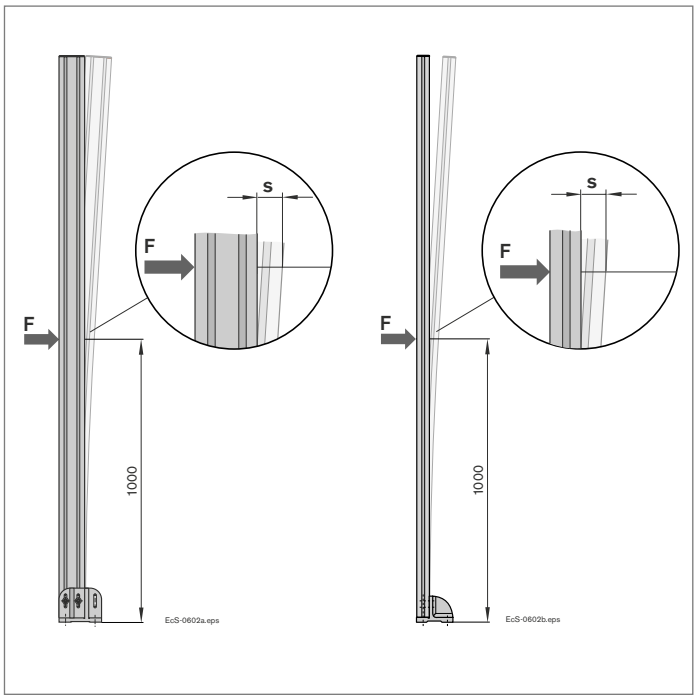

The force required to deflect the EcoSafe system supports has been determined in series of tests.
Test structure: A force acts on an installed system support at a height of 1 m (spring balance).

F (N)		**100**	**150**	**300**	**450**	**600**
s (mm)	45x45	4	6	13	21	31
	45x90	2	3	6	12	18

Material Number Overview

0 842 901 309	2-79, 12-2
1 845 719 000	2-85
3 842 071 941	12-38
3 842 111 987	3-10
3 842 111 988	3-10
3 842 111 989	3-10
3 842 146 813	3-31
3 842 146 815	3-32
3 842 146 848	3-32
3 842 146 877	13-7/8, 13-17/18, 13-31/32
3 842 146 901	2-82
3 842 146 902	8-25
3 842 146 905	8-24
3 842 146 906	7-2
3 842 146 920	11-10
3 842 146 972	3-59
3 842 168 820	18-6
3 842 168 830	18-4
3 842 168 850	18-4
3 842 184 738	2-78, 7-6
3 842 191 175	3-47
3 842 191 182	2-82
3 842 191 194	8-25
3 842 218 940	12-17
3 842 218 941	12-17
3 842 218 942	12-17
3 842 218 953	12-2
3 842 242 404	8-25
3 842 259 790	6-23
3 842 259 791	6-23
3 842 259 792	6-24
3 842 259 793	6-24
3 842 259 794	6-24
3 842 305 766	7-12
3 842 305 767	7-12
3 842 305 768	7-12
3 842 311 950	6-5
3 842 311 951	6-5
3 842 311 956	6-5
3 842 319 500	12-22
3 842 319 501	12-22
3 842 338 990	2-58
3 842 345 081	3-6, 3-31/32, 6-11, 10-7
3 842 348 526	3-25
3 842 352 009	3-25
3 842 352 061	6-5
3 842 352 085	5-4
3 842 500 287	9-5
3 842 500 921	3-57
3 842 500 922	3-57
3 842 500 923	3-57
3 842 501 576	12-18
3 842 501 578	12-18
3 842 501 587	3-19
3 842 501 751	3-4
3 842 501 752	3-4
3 842 501 753	3-4
3 842 501 962	2-82
3 842 502 137	3-19
3 842 502 257	6-4
3 842 502 683	4-3
3 842 502 687	4-6
3 842 502 688	4-6
3 842 503 073	2-82
3 842 503 242	5-6
3 842 504 760	3-29
3 842 504 790	6-7
3 842 505 144	4-6
3 842 506 948	2-17
3 842 506 949	2-18
3 842 506 950	2-17
3 842 506 951	2-18
3 842 506 956	2-36
3 842 506 957	2-36
3 842 506 958	2-36
3 842 506 959	2-37
3 842 508 087	5-5
3 842 508 088	5-5
3 842 508 102	2-56
3 842 508 104	2-57
3 842 508 116	2-57
3 842 508 967	12-38
3 842 509 175	2-39
3 842 509 177	8-24
3 842 509 178	2-17
3 842 509 179	2-48
3 842 509 183	2-52
3 842 509 184	2-40
3 842 509 185	2-52
3 842 509 186	2-42
3 842 509 187	2-42
3 842 509 188	2-46
3 842 509 189	2-45
3 842 509 658	2-44
3 842 510 078	3-7
3 842 510 145	5-5
3 842 510 165	9-5
3 842 510 462	9-5, 12-5
3 842 510 464	9-5
3 842 511 352	6-6
3 842 511 702	2-35
3 842 511 704	2-22
3 842 511 782	2-41
3 842 511 841	13-18
3 842 511 872	2-51
3 842 511 893	6-5
3 842 512 603	2-20
3 842 513 517	12-16
3 842 513 576	2-47
3 842 513 581	2-22
3 842 513 584	2-22
3 842 513 646	13-10
3 842 513 648	13-36, 13-43
3 842 514 519	14-8
3 842 514 567	6-10
3 842 514 568	6-5
3 842 514 663	2-52
3 842 514 928	3-7
3 842 514 929	3-7
3 842 514 930	3-7
3 842 514 931	3-7, 12-7, 12-11, 12-16
3 842 515 229	2-55
3 842 515 244	7-13
3 842 515 366	6-19
3 842 515 367	6-19
3 842 515 457	6-16
3 842 515 459	6-16
3 842 515 473	3-28
3 842 515 531	10-22
3 842 515 547	3-28
3 842 515 863	10-22
3 842 516 015	2-46
3 842 516 165	9-6
3 842 516 175	6-10
3 842 516 598	8-20
3 842 516 669	3-9
3 842 516 685	3-9
3 842 516 694	8-22
3 842 516 715	8-10
3 842 516 720	2-55
3 842 516 729	14-5
3 842 516 731	14-5
3 842 516 837	7-11
3 842 516 838	7-11
3 842 516 845	4-11
3 842 516 846	4-11, 12-7/8, 12-9/10
3 842 516 847	4-4, 4-11
3 842 516 848	4-11
3 842 516 849	4-11
3 842 516 850	4-11
3 842 516 851	4-11
3 842 516 905	17-3
3 842 516 908	17-3
3 842 517 132	3-40, 3-41
3 842 517 179	2-12
3 842 517 180	2-13
3 842 517 183	2-13
3 842 517 198	2-19
3 842 517 200	2-38
3 842 517 543	3-41
3 842 518 204	2-81
3 842 518 205	2-81
3 842 518 343	7-2
3 842 518 347	7-2
3 842 518 351	7-2
3 842 518 367	2-82
3 842 518 368	2-82
3 842 518 369	2-82
3 842 518 375	2-82
3 842 518 376	2-82
3 842 518 377	2-82
3 842 518 424	3-29
3 842 518 426	3-50
3 842 518 427	3-37
3 842 518 492	8-20
3 842 518 650	14-7
3 842 518 738	8-17
3 842 518 740	9-6
3 842 518 743	6-4
3 842 518 797	9-3
3 842 518 798	9-3
3 842 518 856	13-15
3 842 518 896	13-13
3 842 518 897	13-25
3 842 518 898	13-39
3 842 519 318	3-44
3 842 519 319	3-44
3 842 519 321	3-45
3 842 519 465	17-2
3 842 519 565	7-4
3 842 519 567	7-4
3 842 519 658	2-13
3 842 519 717	18-10
3 842 520 000	12-22
3 842 520 025	2-43
3 842 520 802	3-49
3 842 520 922	2-60
3 842 521 216	3-37
3 842 521 262	4-8
3 842 521 263	4-8
3 842 521 510	2-63
3 842 521 513	2-63, 12-4
3 842 521 580	3-28, 12-5
3 842 521 817	6-5
3 842 522 012	17-3
3 842 522 087	17-2
3 842 522 301	6-5
3 842 522 303	6-5
3 842 522 345	10-9
3 842 522 462	10-9
3 842 522 463	10-9
3 842 522 464	10-9
3 842 522 465	10-9
3 842 522 467	10-12, 10-16, 19-11
3 842 522 468	10-14, 19-11
3 842 522 469	10-14/15, 19-11
3 842 522 475	10-20
3 842 522 476	10-20
3 842 522 477	10-20
3 842 522 479	8-12, 10-16
3 842 522 481	10-10
3 842 522 633	4-7
3 842 522 634	4-7
3 842 523 014	9-2, 11-2
3 842 523 092	5-4
3 842 523 093	5-6
3 842 523 094	5-6
3 842 523 097	5-3
3 842 523 098	5-3
3 842 523 102	5-6
3 842 523 135	3-4
3 842 523 140	3-7
3 842 523 142	3-7
3 842 523 145	3-9
3 842 523 165	10-12
3 842 523 166	10-12
3 842 523 167	10-12, 10-16
3 842 523 170	10-13
3 842 523 205	12-14
3 842 523 206	12-14
3 842 523 207	12-15
3 842 523 209	12-14
3 842 523 210	12-14
3 842 523 211	12-15
3 842 523 212	12-7, 12-13
3 842 523 213	12-13
3 842 523 243	8-11
3 842 523 254	2-82
3 842 523 256	2-82
3 842 523 258	2-82
3 842 523 308	10-19
3 842 523 320	8-12, 10-16
3 842 523 438	3-7
3 842 523 493	7-3
3 842 523 494	7-3
3 842 523 508	3-18
3 842 523 511	3-18
3 842 523 516	3-18
3 842 523 517	3-18
3 842 523 520	3-18
3 842 523 525	3-19
3 842 523 528	3-19
3 842 523 530	3-19
3 842 523 532	3-19
3 842 523 537	3-19, 3-20/21
3 842 523 538	3-20
3 842 523 541	3-20
3 842 523 546	3-21
3 842 523 549	3-21
3 842 523 551	3-21
3 842 523 553	3-21
3 842 523 558	3-23
3 842 523 561	3-23
3 842 523 567	3-24
3 842 523 570	3-24
3 842 523 575	3-25

3 842 523 578	3-25
3 842 523 583	3-24
3 842 523 587	3-20
3 842 523 593	3-23
3 842 523 598	2-63, 12-4
3 842 523 872	3-41
3 842 523 873	3-41
3 842 523 874	3-43
3 842 523 875	3-40
3 842 523 876	3-41
3 842 523 877	3-42
3 842 523 918	12-42
3 842 523 920	3-6
3 842 523 921	3-6
3 842 523 922	3-6
3 842 523 925	3-6
3 842 524 012	3-5
3 842 524 025	7-5
3 842 524 026	7-5
3 842 524 027	7-5
3 842 524 028	7-5
3 842 524 031	2-18
3 842 524 034	2-19
3 842 524 037	2-19
3 842 524 040	2-37
3 842 524 043	2-37
3 842 524 046	2-38
3 842 524 049	2-20
3 842 524 050	2-18
3 842 524 051	2-19
3 842 524 053	2-37
3 842 524 054	2-37
3 842 524 055	2-38
3 842 524 058	2-54
3 842 524 061	2-54
3 842 524 064	2-54
3 842 524 067	2-54
3 842 524 069	7-10
3 842 524 072	7-10
3 842 524 153	2-63, 12-5
3 842 524 163	10-14
3 842 524 164	10-14
3 842 524 165	10-15
3 842 524 166	10-15
3 842 524 414	2-83
3 842 524 415	2-83
3 842 524 469	6-11
3 842 524 476	3-48
3 842 524 490	12-5
3 842 524 499	6-19
3 842 524 500	6-19
3 842 524 622	8-20
3 842 524 623	8-20
3 842 524 986	9-8
3 842 525 014	10-21
3 842 525 158	10-15
3 842 525 443	12-28
3 842 525 480	8-17
3 842 525 481	8-17
3 842 525 505	2-38
3 842 525 737	12-29
3 842 525 738	12-29
3 842 525 739	12-29
3 842 525 740	12-29
3 842 525 741	12-29
3 842 525 742	12-29
3 842 525 766	8-17
3 842 525 767	8-17
3 842 525 780	10-17
3 842 525 781	10-16

3 842 525 782	10-16
3 842 525 821	8-11, 10-16
3 842 525 822	8-11, 10-16
3 842 525 823	8-11
3 842 525 833	10-18
3 842 525 946	8-13
3 842 525 947	8-13
3 842 526 003	3-46
3 842 526 034	12-28
3 842 526 410	13-7, 13-9
3 842 526 411	13-7, 13-10
3 842 526 412	13-17, 13-21
3 842 526 413	13-17, 13-21
3 842 526 414	13-31, 13-35
3 842 526 415	13-31, 13-35
3 842 526 416	13-12, 13-14
3 842 526 417	13-12, 13-15
3 842 526 422	13-22, 13-29
3 842 526 560	3-32, 6-10, 6-12
3 842 526 561	6-8, 6-11/12
3 842 526 564	11-9
3 842 526 565	11-9
3 842 526 588	8-22
3 842 526 589	14-7
3 842 526 591	8-22
3 842 526 626	2-62
3 842 526 627	2-62
3 842 526 628	2-62
3 842 526 660	2-62
3 842 526 665	2-62
3 842 526 671	2-61
3 842 526 672	2-61
3 842 526 673	2-61
3 842 526 786	10-17
3 842 526 787	10-17
3 842 526 817	2-15
3 842 526 821	2-48
3 842 526 863	13-24, 13-28
3 842 526 865	13-24, 13-28
3 842 526 867	13-38, 13-42
3 842 526 869	13-38, 13-42
3 842 526 878	13-32
3 842 526 893	13-47
3 842 526 894	13-47
3 842 526 895	13-47
3 842 527 174	2-60, 3-38
3 842 527 186	6-5
3 842 527 226	13-8, 13-13, 13-18/19/20, 13-25/26/27, 13-32/33/34, 13-39/40/41, 13-49
3 842 527 553	6-11, 10-7
3 842 527 738	16-6
3 842 527 851	16-6
3 842 528 009	16-9
3 842 528 189	6-13
3 842 528 191	6-13
3 842 528 539	16-13
3 842 528 540	16-13
3 842 528 574	5-4, 5-6, 14-3
3 842 528 577	14-3
3 842 528 586	14-6
3 842 528 588	14-6
3 842 528 590	14-6
3 842 528 593	3-38
3 842 528 715	3-6, 3-31/32
3 842 528 718	3-6
3 842 528 721	3-6, 6-11, 10-7
3 842 528 724	3-6
3 842 528 727	3-6

3 842 528 735	3-7, 12-8/-9, 12-10/11, 12-16, 12-18
3 842 528 738	3-7
3 842 528 741	3-7
3 842 528 744	3-7
3 842 528 746	3-37
3 842 528 967	3-21
3 842 529 005	3-22
3 842 529 006	3-22
3 842 529 010	3-42
3 842 529 011	3-42
3 842 529 012	3-42
3 842 529 013	3-42
3 842 529 020	3-28
3 842 529 024	6-5
3 842 529 025	6-4, 12-43/44
3 842 529 026	2-83
3 842 529 049	2-28
3 842 529 050	2-28
3 842 529 051	2-28
3 842 529 248	3-56, 5-5
3 842 529 293	3-56
3 842 529 294	3-9
3 842 529 295	3-9
3 842 529 296	3-9
3 842 529 297	3-9
3 842 529 298	3-9
3 842 529 299	3-9
3 842 529 300	3-9
3 842 529 319	3-8
3 842 529 320	3-8
3 842 529 321	3-8
3 842 529 323	3-8
3 842 529 324	3-8
3 842 529 325	3-8
3 842 529 327	3-8
3 842 529 334	3-56
3 842 529 339	2-26
3 842 529 341	2-30
3 842 529 345	2-32
3 842 529 347	2-32
3 842 529 349	2-34
3 842 529 351	2-49
3 842 529 355	2-50
3 842 529 357	2-51
3 842 529 359	2-29
3 842 529 361	2-26
3 842 529 363	2-27
3 842 529 365	2-27
3 842 529 367	2-27
3 842 529 371	2-28
3 842 529 373	2-28
3 842 529 375	2-28
3 842 529 381	2-29
3 842 529 383	3-21
3 842 529 386	3-22
3 842 529 404	3-45
3 842 529 416	6-6
3 842 529 417	6-6
3 842 529 761	7-5
3 842 529 762	7-5
3 842 529 850	16-4
3 842 529 931	12-40
3 842 529 933	12-41
3 842 530 231	3-23
3 842 530 235	3-38
3 842 530 236	3-38, 3-42, 3-43, 10-7
3 842 530 241	9-7

3 842 530 259	3-26
3 842 530 260	3-26
3 842 530 281	3-4
3 842 530 283	2-85, 3-4
3 842 530 285	3-4, 8-12, 13-7, 13-8, 13-20, 13-27, 13-34, 13-41
3 842 530 287	3-4, 13-17/18, 13-31/32
3 842 530 303	8-21, 9-4 ,12-3
3 842 530 306	2-85
3 842 530 316	3-8
3 842 530 321	3-8
3 842 530 325	3-39
3 842 530 326	3-39
3 842 530 329	12-8/9/10, 12-13
3 842 530 352	8-16
3 842 530 353	8-16
3 842 530 360	3-23
3 842 530 361	3-27
3 842 530 381	3-26
3 842 530 382	3-26
3 842 530 400	14-4
3 842 530 417	12-42
3 842 530 460	3-27
3 842 530 864	12-42
3 842 531 220	2-22
3 842 532 195	3-48
3 842 532 196	3-46
3 842 532 198	3-49
3 842 532 199	3-47
3 842 532 205	3-50
3 842 532 206	4-8
3 842 532 207	4-8
3 842 532 208	4-7
3 842 532 209	4-7
3 842 532 274	3-28
3 842 532 363	11-2
3 842 532 505	2-66, 12-37
3 842 532 508	12-37
3 842 532 608	2-65, 12-35
3 842 532 676	12-41
3 842 532 695	2-65, 12-34
3 842 532 696	2-66, 12-35
3 842 532 697	2-65, 12-35
3 842 532 752	12-21
3 842 532 862	12-21
3 842 532 865	12-21
3 842 532 866	12-21
3 842 532 867	12-21
3 842 532 870	12-21
3 842 532 871	12-25
3 842 532 878	2-68
3 842 532 879	2-68
3 842 532 880	12-21
3 842 532 881	12-21
3 842 532 883	12-21
3 842 532 884	12-21
3 842 532 886	12-20
3 842 532 887	12-20
3 842 533 305	6-15
3 842 533 306	6-15
3 842 533 307	6-14
3 842 533 308	6-14
3 842 533 309	6-14
3 842 533 310	6-5, 6-14
3 842 533 841	12-45, 16-4
3 842 533 901	6-15
3 842 535 115	2-64, 12-20
3 842 535 118	2-68

3 842 535 121	12-23
3 842 535 122	12-23
3 842 535 124	12-22
3 842 535 136	2-84
3 842 535 176	2-22
3 842 535 364	12-24
3 842 535 428	3-50
3 842 535 458	3-52
3 842 535 459	3-52
3 842 535 464	3-52
3 842 535 465	3-53
3 842 535 466	3-53
3 842 535 571	3-15, 8-24
3 842 535 572	3-13
3 842 535 573	3-14
3 842 535 574	3-13
3 842 535 575	3-14
3 842 535 576	3-15
3 842 535 577	3-15
3 842 535 578	3-13
3 842 535 583	3-57, 4-3
3 842 535 586	2-22
3 842 535 617	3-58
3 842 535 618	3-57
3 842 535 619	3-58
3 842 535 620	3-58
3 842 535 621	3-58
3 842 535 622	3-58
3 842 535 624	3-58
3 842 535 625	3-16
3 842 535 626	3-16
3 842 535 627	3-16
3 842 535 629	3-55
3 842 535 630	3-54
3 842 535 634	3-54
3 842 535 635	3-55
3 842 535 637	2-56
3 842 535 645	13-7, 13-9
3 842 535 661	2-55
3 842 535 662	13-7/8, 13-12/13
3 842 535 663	13-31, 13-33, 13-38, 13-40
3 842 535 664	13-17, 13-19, 13-24, 13-26
3 842 535 665	13-33, 13-40
3 842 535 666	13-19, 13-26
3 842 535 667	12-29
3 842 535 668	12-29
3 842 535 669	6-16
3 842 535 670	6-16
3 842 535 676	11-2
3 842 535 680	13-17, 13-22, 13-24, 13-29, 13-31, 13-36, 13-38, 13-43
3 842 535 681	13-12, 13-15
3 842 535 682	13-7, 13-10
3 842 535 683	12-29
3 842 535 684	8-4
3 842 535 719	5-4
3 842 535 721	5-3
3 842 535 835	2-68, 2-69
3 842 535 921	11-2
3 842 536 002	2-68
3 842 536 054	12-32
3 842 536 055	12-30
3 842 536 056	12-30
3 842 536 057	12-30
3 842 536 119	3-31
3 842 536 120	3-31
3 842 536 121	3-31
3 842 536 122	3-31
3 842 536 123	3-31
3 842 536 124	3-31
3 842 536 125	3-31
3 842 536 126	3-31
3 842 536 148	7-11, 17-4
3 842 536 207	6-9
3 842 536 268	12-42
3 842 536 270	12-42
3 842 536 295	16-7
3 842 536 320	17-3
3 842 536 321	2-81, 6-16
3 842 536 470	6-5
3 842 536 472	2-20
3 842 536 475	2-12
3 842 536 478	2-12
3 842 536 481	2-33
3 842 536 484	2-30
3 842 536 489	7-8
3 842 536 490	7-8
3 842 536 491	7-8
3 842 536 531	8-23
3 842 536 532	8-23
3 842 536 533	8-26
3 842 536 536	8-26
3 842 536 537	8-26
3 842 536 540	8-26
3 842 536 556	8-18
3 842 536 560	6-6
3 842 536 562	6-6
3 842 536 564	6-6
3 842 536 566	6-6
3 842 536 581	6-8
3 842 536 599	3-4
3 842 536 600	3-4
3 842 536 601	3-4
3 842 536 602	3-4
3 842 536 603	3-4
3 842 536 604	3-4
3 842 536 605	3-4
3 842 536 606	3-4
3 842 536 669	3-8
3 842 536 670	7-8
3 842 536 671	7-8
3 842 536 672	7-8
3 842 536 673	3-9
3 842 536 675	3-9
3 842 536 676	3-9
3 842 536 694	6-3
3 842 536 695	6-3
3 842 536 696	6-3
3 842 536 701	6-21
3 842 536 722	12-26
3 842 536 724	12-27
3 842 536 729	3-30
3 842 536 730	2-69
3 842 536 736	6-20
3 842 536 737	6-20
3 842 536 738	6-20
3 842 536 746	6-9
3 842 536 787	3-37
3 842 536 792	12-41
3 842 536 811	6-2
3 842 536 812	6-2
3 842 536 902	6-22
3 842 537 013	3-51
3 842 537 100	2-44
3 842 537 102	2-40
3 842 537 113	2-84
3 842 537 116	2-84
3 842 537 119	2-84
3 842 537 135	2-85
3 842 537 163	12-29
3 842 537 164	12-29
3 842 537 206	6-3
3 842 537 220	6-2
3 842 537 222	6-2
3 842 537 223	6-2
3 842 537 224	6-2
3 842 537 225	6-2
3 842 537 226	6-2
3 842 537 227	6-2
3 842 537 228	6-2
3 842 537 229	6-2
3 842 537 230	6-2
3 842 537 231	6-2
3 842 537 232	6-2
3 842 537 280	18-5
3 842 537 289	18-7
3 842 537 321	12-28
3 842 537 477	2-69
3 842 537 556	14-2
3 842 537 583	12-32
3 842 537 584	12-32
3 842 537 592	12-33
3 842 537 593	12-33
3 842 537 650	2-84
3 842 537 651	2-84
3 842 537 652	2-84
3 842 537 657	12-27
3 842 537 660	12-23
3 842 537 661	12-23
3 842 537 664	12-33
3 842 537 665	12-33
3 842 537 679	2-58
3 842 537 681	2-58
3 842 537 687	12-26
3 842 537 718	2-68/69
3 842 537 720	12-24
3 842 537 740	12-32
3 842 537 776	12-25
3 842 537 777	12-25
3 842 537 778	12-25
3 842 537 779	12-25
3 842 537 803	12-22
3 842 537 806	12-22
3 842 537 807	12-22
3 842 537 812	2-48
3 842 537 816	2-14
3 842 537 817	2-53
3 842 537 818	2-14
3 842 537 819	2-14
3 842 537 821	2-23
3 842 537 823	2-43
3 842 537 824	2-31
3 842 537 825	2-49
3 842 537 826	2-50
3 842 537 827	2-31
3 842 537 828	2-34
3 842 537 861	3-30
3 842 537 862	3-30
3 842 537 888	12-41
3 842 537 889	12-41
3 842 537 890	12-41
3 842 537 894	12-31
3 842 537 895	12-31
3 842 537 896	12-31
3 842 537 897	12-31
3 842 537 898	12-31
3 842 537 899	12-31
3 842 537 900	12-31
3 842 537 901	12-31
3 842 537 911	12-27, 12-33
3 842 537 944	12-20
3 842 537 945	12-20
3 842 537 947	12-20
3 842 537 948	12-21
3 842 537 951	12-24
3 842 537 958	12-21
3 842 537 959	12-21
3 842 537 960	12-21
3 842 537 961	12-21
3 842 537 962	12-21
3 842 537 963	12-21
3 842 537 964	12-21
3 842 537 965	12-21
3 842 537 995	18-9
3 842 538 064	12-22
3 842 538 065	12-22
3 842 538 093	2-84
3 842 538 094	12-20
3 842 538 208	16-5
3 842 538 209	16-4
3 842 538 241	8-14
3 842 538 245	12-22
3 842 538 275	4-10
3 842 538 276	4-10
3 842 538 280	2-58
3 842 538 287	2-33
3 842 538 296	2-45
3 842 538 297	2-45
3 842 538 298	2-41
3 842 538 299	2-41
3 842 538 330	2-31
3 842 538 334	2-33
3 842 538 372	12-26
3 842 538 388	16-3
3 842 538 389	16-4
3 842 538 489	3-12
3 842 538 490	3-12
3 842 538 491	3-12
3 842 538 555	6-3
3 842 538 556	6-3
3 842 538 557	6-3
3 842 538 558	6-3
3 842 538 559	6-3
3 842 538 562	3-51
3 842 538 563	3-53
3 842 538 564	3-53
3 842 538 565	3-39
3 842 538 566	3-39
3 842 538 567	3-39
3 842 538 607	4-5, 4-11
3 842 538 656	3-46
3 842 538 657	3-46
3 842 538 658	3-47
3 842 538 673	6-3
3 842 538 674	6-3
3 842 538 675	6-3
3 842 538 676	6-3
3 842 538 677	6-3
3 842 538 678	6-3
3 842 538 679	6-3
3 842 538 680	6-3
3 842 538 683	4-3
3 842 538 684	4-4
3 842 538 685	4-4
3 842 538 686	4-5
3 842 538 687	4-5
3 842 538 688	4-7

3 842 538 689	4-7
3 842 538 690	4-7
3 842 538 691	4-7
3 842 538 692	4-8
3 842 538 693	4-8
3 842 538 694	4-8
3 842 538 695	4-8
3 842 538 696	3-48
3 842 538 697	3-48
3 842 538 698	3-49
3 842 538 700	3-50
3 842 538 701	3-50
3 842 538 702	3-50
3 842 538 703	3-28
3 842 538 704	3-28
3 842 538 705	3-28
3 842 538 706	3-29
3 842 538 829	16-3
3 842 538 832	6-3
3 842 538 833	6-3
3 842 538 834	6-3
3 842 538 835	6-3
3 842 538 836	6-3
3 842 538 932	6-3
3 842 538 934	6-3
3 842 538 955	2-82
3 842 538 956	2-82
3 842 538 957	2-82
3 842 538 958	2-82
3 842 539 120	13-12, 13-14
3 842 539 339	16-11
3 842 539 340	16-4
3 842 539 344	16-12
3 842 539 345	16-5
3 842 539 412	13-8
3 842 539 414	13-13
3 842 539 415	13-18, 13-25
3 842 539 416	13-32, 13-39
3 842 539 494	16-10
3 842 539 495	16-10
3 842 539 496	16-11
3 842 539 497	16-11
3 842 539 498	16-9
3 842 539 499	16-9
3 842 539 500	16-11
3 842 539 501	16-12
3 842 539 505	16-12
3 842 539 613	16-5
3 842 539 799	4-6
3 842 539 800	4-6
3 842 539 826	16-12
3 842 539 894	15-2
3 842 539 895	15-3
3 842 539 896	15-3
3 842 539 897	15-3
3 842 539 898	15-3
3 842 540 012	15-2
3 842 540 173	6-12
3 842 540 668	6-10, 6-12
3 842 540 900	13-52, 13-57
3 842 540 954	2-26
3 842 540 955	2-35
3 842 541 008	12-30
3 842 541 173	2-73
3 842 541 175	2-74
3 842 541 178	2-74
3 842 541 181	2-74
3 842 541 183	2-73
3 842 541 185	2-73
3 842 541 187	2-76

3 842 541 190	2-76
3 842 541 193	2-77
3 842 541 196	2-72
3 842 541 211	2-72
3 842 541 213	2-72
3 842 541 226	6-19
3 842 541 228	6-19
3 842 541 230	6-19
3 842 541 232	6-19
3 842 541 234	6-19
3 842 541 236	6-19
3 842 541 238	6-19
3 842 541 240	6-19
3 842 541 242	6-19
3 842 541 244	6-19
3 842 541 246	3-5
3 842 541 296	2-77
3 842 541 393	3-9
3 842 541 409	3-5
3 842 541 410	3-53
3 842 541 412	3-52
3 842 541 807	2-81
3 842 541 814	2-64, 12-20
3 842 541 937	2-21
3 842 541 939	2-21
3 842 542 146	10-10
3 842 542 328	7-9
3 842 542 329	7-9
3 842 542 330	7-9
3 842 542 435	2-82
3 842 542 500	18-8
3 842 542 555	18-3
3 842 542 556	18-2
3 842 542 667	6-8
3 842 542 668	6-9
3 842 542 669	6-9
3 842 542 683	8-15
3 842 542 684	8-15
3 842 542 692	3-7
3 842 542 693	3-7
3 842 542 694	3-7
3 842 542 696	2-60
3 842 542 698	2-60
3 842 542 736	3-11
3 842 542 737	3-11
3 842 543 272	2-76
3 842 543 311	2-78
3 842 543 321	8-7
3 842 543 322	8-7
3 842 543 323	8-7
3 842 543 324	8-7
3 842 543 325	8-7
3 842 543 326	8-7
3 842 543 327	8-7
3 842 543 328	8-7
3 842 543 329	8-7
3 842 543 330	8-7
3 842 543 331	8-7
3 842 543 332	8-7
3 842 543 333	8-7
3 842 543 334	8-7
3 842 543 371	8-3
3 842 543 372	8-3
3 842 543 401	4-4
3 842 543 402	4-4
3 842 543 403	4-5
3 842 543 404	4-5
3 842 543 408	8-19
3 842 543 409	8-19
3 842 543 410	8-19

3 842 543 411	8-19
3 842 543 412	8-19
3 842 543 480	2-75
3 842 543 494	2-79
3 842 544 500	8-5
3 842 544 501	8-5
3 842 544 502	8-5
3 842 544 503	8-5
3 842 544 504	8-5
3 842 544 505	8-5
3 842 544 506	8-5
3 842 544 507	8-5
3 842 544 525	8-6
3 842 544 526	8-6
3 842 544 527	8-6
3 842 544 528	8-6
3 842 544 529	8-6
3 842 544 530	8-6
3 842 544 531	8-6
3 842 544 552	8-8
3 842 544 553	8-8
3 842 544 554	8-8
3 842 544 562	8-9
3 842 544 637	2-79
3 842 544 661	8-3
3 842 544 797	2-59, 2-77
3 842 544 832	14-8
3 842 544 833	14-9
3 842 544 834	14-8
3 842 544 835	14-8
3 842 544 836	14-9
3 842 544 837	14-9
3 842 544 875	6-12
3 842 546 519	9-4
3 842 546 560	10-11
3 842 546 564	4-2
3 842 546 625	3-33
3 842 546 626	3-33
3 842 546 627	3-33
3 842 546 628	3-34
3 842 546 629	3-34
3 842 546 630	3-34
3 842 546 632	3-35
3 842 546 717	6-12/13
3 842 546 718	6-12/13
3 842 546 744	14-9
3 842 546 745	14-9
3 842 547 227	16-9
3 842 547 228	16-10
3 842 547 461	3-36
3 842 547 707	12-45
3 842 547 718	12-45
3 842 547 729	12-45
3 842 547 806	3-9
3 842 547 807	3-9
3 842 547 808	3-9
3 842 547 811	3-7
3 842 547 812	3-7
3 842 547 813	3-7
3 842 547 814	3-7
3 842 547 815	3-7
3 842 547 816	3-7
3 842 547 817	3-7
3 842 547 821	3-9
3 842 547 822	3-9
3 842 547 823	3-9
3 842 547 824	3-9
3 842 547 825	3-8
3 842 547 826	3-8
3 842 547 827	2-44

3 842 547 835	6-19
3 842 547 836	6-19
3 842 547 837	6-19
3 842 547 838	6-19
3 842 547 839	6-19
3 842 547 840	6-19
3 842 547 868	4-9
3 842 547 869	4-9
3 842 547 890	6-22
3 842 547 971	12-45
3 842 547 982	14-7
3 842 547 990	12-45
3 842 548 117	2-72
3 842 548 118	2-74
3 842 548 119	2-73
3 842 548 120	2-77
3 842 548 121	2-75
3 842 548 122	2-75
3 842 548 123	2-75
3 842 548 126	2-78
3 842 548 127	2-78
3 842 548 128	2-80
3 842 548 129	2-72
3 842 548 130	2-72
3 842 548 131	2-79
3 842 548 132	2-80
3 842 548 700	3-40/41
3 842 548 701	3-41
3 842 548 702	3-42/43
3 842 548 703	3-43
3 842 548 704	3-40/41
3 842 548 705	3-41
3 842 548 706	3-42/43
3 842 548 707	3-43
3 842 548 708	3-44
3 842 548 709	3-44
3 842 548 710	3-45
3 842 548 711	3-45
3 842 548 712	3-44
3 842 548 713	3-44
3 842 548 714	3-45
3 842 548 715	3-45
3 842 548 716	3-44
3 842 548 717	3-44
3 842 548 718	3-45
3 842 548 719	3-45
3 842 548 720	3-44
3 842 548 721	3-44
3 842 548 722	3-45
3 842 548 723	3-45
3 842 548 742	2-12, 2-14
3 842 548 743	2-12, 2-14
3 842 548 744	2-17, 2-20/21
3 842 548 745	2-17, 2-20/21
3 842 548 746	2-26, 2-31, 2-33
3 842 548 747	2-26, 2-31, 2-33
3 842 548 748	2-30/31/32/33
3 842 548 749	2-30/31/32/33
3 842 548 750	2-32, 2-34
3 842 548 751	2-32, 2-34
3 842 548 752	2-35, 2-39
3 842 548 753	2-35, 2-39, 10-7, 13-31
3 842 548 754	2-40
3 842 548 755	2-40, 13-7
3 842 548 756	2-40/41/42/43
3 842 548 757	2-40/41/42/43, 13-12, 13-31, 13-38
3 842 548 758	2-44, 2-46
3 842 548 759	2-44, 2-46, 13-17

3 842 548 760	2-45/46/47
3 842 548 761	2-45/46/47, 13-24, 13-31, 13-38
3 842 548 766	2-15
3 842 548 767	2-15
3 842 548 768	2-23
3 842 548 769	2-23
3 842 548 770	2-48
3 842 548 771	2-48
3 842 548 772	2-48
3 842 548 773	2-48
3 842 548 774	2-17, 2-20/21
3 842 548 775	2-17, 2-20/21
3 842 548 776	2-19
3 842 548 777	2-19
3 842 548 778	2-22
3 842 548 779	2-22
3 842 548 780	2-20/21
3 842 548 781	2-20/21
3 842 548 782	2-26
3 842 548 783	2-26
3 842 548 784	2-29
3 842 548 785	2-29
3 842 548 786	2-29
3 842 548 787	2-29
3 842 548 788	2-30
3 842 548 789	2-30
3 842 548 790	2-31
3 842 548 792	2-34
3 842 548 793	2-34
3 842 548 794	2-42
3 842 548 795	2-42, 13-17, 13-24
3 842 548 796	2-35, 2-39
3 842 548 797	2-35, 2-39
3 842 548 798	2-38
3 842 548 799	2-38
3 842 548 800	2-38
3 842 548 801	2-38
3 842 548 802	2-40
3 842 548 803	2-40
3 842 548 804	2-40/41/42
3 842 548 805	2-40, 2-41/42
3 842 548 806	2-43
3 842 548 807	2-43
3 842 548 808	2-51/52
3 842 548 809	2-51/52
3 842 548 810	2-51/52
3 842 548 811	2-51/52
3 842 548 812	2-52
3 842 548 813	2-52
3 842 548 814	2-45/46/47
3 842 548 815	2-45/46/47
3 842 548 816	2-47
3 842 548 817	2-47
3 842 548 818	2-50
3 842 548 819	2-50
3 842 548 820	2-49
3 842 548 821	2-49
3 842 548 822	2-49
3 842 548 823	2-49
3 842 548 824	2-50/51
3 842 548 825	2-50/51
3 842 548 826	2-13
3 842 548 827	2-13
3 842 548 828	2-14
3 842 548 829	2-14
3 842 548 830	2-48
3 842 548 831	2-48
3 842 548 832	7-6
3 842 548 834	7-6
3 842 548 836	7-7
3 842 548 838	7-7
3 842 548 840	7-7
3 842 548 842	3-18
3 842 548 843	3-18
3 842 548 844	3-18
3 842 548 845	3-18
3 842 548 846	3-19
3 842 548 847	3-19
3 842 548 848	3-20
3 842 548 849	3-20
3 842 548 850	3-20
3 842 548 851	3-20
3 842 548 852	3-21
3 842 548 853	3-21
3 842 548 854	3-21
3 842 548 855	3-21
3 842 548 856	3-22
3 842 548 857	3-22
3 842 548 858	3-22
3 842 548 859	3-22
3 842 548 860	3-23
3 842 548 861	3-23
3 842 548 862	3-23
3 842 548 863	3-23
3 842 548 864	3-24
3 842 548 865	3-24
3 842 548 866	3-24
3 842 548 867	3-24
3 842 548 868	3-25
3 842 548 869	3-25
3 842 548 870	3-26
3 842 548 871	3-26
3 842 548 872	3-26
3 842 548 873	3-26
3 842 548 874	3-27
3 842 548 875	3-27
3 842 548 876	2-82
3 842 548 877	2-82
3 842 548 878	2-82
3 842 548 879	2-82
3 842 548 934	3-52
3 842 548 935	3-52
3 842 548 936	3-52
3 842 548 937	3-53
3 842 548 938	3-53
3 842 548 949	7-3
3 842 548 997	11-6
3 842 549 858	3-40
3 842 549 859	3-40
3 842 549 860	3-41
3 842 549 861	3-41
3 842 549 862	3-41
3 842 549 863	3-41
3 842 549 864	3-41
3 842 549 865	3-41
3 842 549 866	3-42
3 842 549 867	3-42
3 842 549 868	3-42
3 842 549 869	3-42
3 842 549 870	3-42
3 842 549 871	3-42
3 842 549 872	3-43
3 842 549 873	3-43
3 842 549 874	3-43
3 842 549 876	3-43
3 842 549 882	2-82
3 842 549 888	2-82
3 842 551 596	3-18
3 842 551 597	3-18
3 842 551 598	3-19
3 842 551 599	3-19
3 842 551 600	3-19
3 842 551 601	3-20
3 842 551 602	3-20
3 842 551 603	3-21
3 842 551 604	3-22
3 842 551 605	3-22
3 842 551 606	3-23
3 842 551 607	3-24
3 842 551 608	3-24
3 842 551 609	3-21
3 842 551 610	3-21
3 842 551 611	3-21
3 842 551 612	3-23
3 842 551 613	3-25
3 842 552 131	12-43
3 842 552 132	12-43
3 842 552 133	12-43
3 842 552 134	12-43
3 842 552 135	12-43
3 842 552 174	12-44
3 842 552 175	12-44
3 842 552 176	12-44
3 842 552 177	12-44
3 842 552 240	11-7
3 842 552 245	11-7
3 842 552 246	11-7
3 842 552 247	11-6
3 842 552 248	11-6
3 842 552 249	11-5
3 842 552 250	11-5
3 842 552 251	11-5
3 842 552 252	11-5
3 842 552 253	11-5
3 842 552 254	11-5
3 842 552 255	11-5
3 842 552 256	11-5
3 842 552 257	11-7
3 842 552 258	11-7
3 842 552 259	11-7
3 842 552 260	11-7
3 842 552 263	11-8
3 842 552 265	11-8
3 842 552 266	11-8
3 842 552 267	11-4
3 842 552 268	11-4
3 842 552 270	11-4
3 842 552 273	11-4
3 842 552 275	11-4
3 842 552 421	12-7, 12-12
3 842 552 422	12-8/9/10, 12-12
3 842 552 423	12-7, 12-11
3 842 552 424	12-8/9/10/11
3 842 552 151	12-23, 12-26
3 842 553 973	11-8
3 842 553 974	11-8
3 842 554 280	10-7
3 842 554 281	10-7
3 842 554 282	10-6
3 842 554 283	10-6
3 842 554 284	10-6
3 842 554 285	10-6
3 842 849 791	2-31
3 842 990 087	2-48
3 842 990 090	2-48
3 842 990 091	2-48
3 842 990 092	2-45
3 842 990 093	2-45
3 842 990 094	2-45
3 842 990 097	2-52
3 842 990 098	2-52
3 842 990 099	2-52
3 842 990 111	9-5
3 842 990 115	8-24
3 842 990 116	8-24
3 842 990 292	2-48
3 842 990 300	2-42
3 842 990 301	2-42
3 842 990 302	2-42
3 842 990 303	2-42
3 842 990 304	2-42
3 842 990 305	2-42
3 842 990 307	2-42
3 842 990 309	2-42
3 842 990 311	2-42
3 842 990 313	2-42
3 842 990 323	2-42
3 842 990 325	2-42
3 842 990 329	2-42
3 842 990 331	2-42
3 842 990 335	2-42, 13-17, 13-24
3 842 990 336	2-42
3 842 990 339	2-42, 13-17
3 842 990 342	2-42
3 842 990 344	2-42
3 842 990 345	2-48
3 842 990 346	2-48
3 842 990 347	2-48
3 842 990 350	2-52
3 842 990 351	2-52
3 842 990 352	2-52
3 842 990 353	2-52
3 842 990 354	2-52
3 842 990 355	2-52
3 842 990 357	2-52
3 842 990 359	2-52
3 842 990 370	2-52
3 842 990 373	2-52
3 842 990 409	2-66, 12-35
3 842 990 416	2-46, 13-31, 13-38
3 842 990 417	2-46
3 842 990 418	2-46
3 842 990 419	2-46
3 842 990 421	2-46
3 842 990 450	2-52
3 842 990 453	2-52
3 842 990 454	2-52
3 842 990 464	2-52
3 842 990 472	2-52
3 842 990 478	2-52
3 842 990 481	2-52
3 842 990 500	2-45, 13-24
3 842 990 501	2-45
3 842 990 502	2-45
3 842 990 505	2-45
3 842 990 507	2-45
3 842 990 517	2-39
3 842 990 518	2-39
3 842 990 519	2-39
3 842 990 520	2-39
3 842 990 521	2-39
3 842 990 570	2-40, 13-7
3 842 990 571	2-40
3 842 990 572	2-40
3 842 990 573	2-40
3 842 990 575	2-40
3 842 990 584	2-40
3 842 990 640	2-39
3 842 990 642	2-39

3 842 990 644	2-39	3 842 992 475	2-47	3 842 993 081	2-46, 13-31	3 842 993 185	2-26
3 842 990 646	2-39	3 842 992 476	2-22	3 842 993 082	2-45, 13-24	3 842 993 186	2-26
3 842 990 648	2-39	3 842 992 493	2-55	3 842 993 083	2-45	3 842 993 187	2-27
3 842 990 670	2-40	3 842 992 676	2-64, 12-34	3 842 993 084	2-41, 13-12	3 842 993 188	2-27
3 842 990 672	2-40	3 842 992 857	2-46	3 842 993 085	2-40, 13-7	3 842 993 189	2-27
3 842 990 674	2-40	3 842 992 858	2-46	3 842 993 120	2-26	3 842 993 190	2-27
3 842 990 688	2-40	3 842 992 859	2-46	3 842 993 121	2-26	3 842 993 191	2-27
3 842 990 690	2-40	3 842 992 860	2-46	3 842 993 122	2-26	3 842 993 192	2-27
3 842 990 720	2-17	3 842 992 861	2-46	3 842 993 123	2-26	3 842 993 193	2-31
3 842 990 721	2-17	3 842 992 864	2-46	3 842 993 124	2-26	3 842 993 194	2-50
3 842 990 722	2-17	3 842 992 884	2-65, 12-34	3 842 993 125	2-26	3 842 993 195	2-28
3 842 990 723	2-17	3 842 992 888	2-12	3 842 993 126	2-26	3 842 993 196	2-50
3 842 990 724	2-17	3 842 992 889	2-13	3 842 993 127	2-34	3 842 993 197	2-28
3 842 990 725	2-17	3 842 992 890	2-13	3 842 993 128	2-34	3 842 993 198	2-28
3 842 990 726	2-17	3 842 992 891	2-14	3 842 993 129	2-26	3 842 993 199	2-50
3 842 992 373	2-45	3 842 992 896	2-19	3 842 993 130	2-30	3 842 993 200	2-50
3 842 992 375	2-40	3 842 992 897	2-38	3 842 993 131	2-30	3 842 993 201	2-34
3 842 992 376	2-40	3 842 992 898	2-46, 13-38	3 842 993 132	2-30	3 842 993 202	2-34
3 842 992 378	2-46	3 842 992 903	2-65, 12-35	3 842 993 133	2-32	3 842 993 203	2-34
3 842 992 387	2-43	3 842 992 913	2-53	3 842 993 134	2-32	3 842 993 204	2-34
3 842 992 388	2-43	3 842 992 924	2-13	3 842 993 135	2-30	3 842 993 225	2-31
3 842 992 397	2-17	3 842 992 925	13-12/13	3 842 993 136	2-30	3 842 993 226	2-34
3 842 992 398	2-18	3 842 992 926	2-20	3 842 993 137	2-30	3 842 993 227	2-51
3 842 992 399	2-17	3 842 992 927	2-43, 13-31, 13-38	3 842 993 138	2-30	3 842 993 228	2-50
3 842 992 400	2-18	3 842 992 928	2-43, 13-31	3 842 993 139	2-31	3 842 993 229	2-34
3 842 992 401	2-36	3 842 992 945	2-38	3 842 993 140	2-31	3 842 993 230	2-12
3 842 992 402	2-36	3 842 992 946	2-63, 12-4	3 842 993 141	2-31	3 842 993 231	2-12
3 842 992 403	2-36	3 842 992 953	2-35	3 842 993 142	2-31	3 842 993 256	2-29
3 842 992 404	2-37	3 842 992 954	2-35	3 842 993 143	2-32	3 842 993 257	2-29
3 842 992 411	2-56	3 842 992 956	2-35	3 842 993 144	2-32	3 842 993 259	2-65, 12-35
3 842 992 412	2-57	3 842 992 960	2-35	3 842 993 145	2-32	3 842 993 306	12-45, 16-4
3 842 992 415	2-44, 13-17	3 842 992 961	2-45	3 842 993 146	2-32	3 842 993 308	6-15
3 842 992 416	2-44	3 842 992 962	2-52	3 842 993 147	2-32	3 842 993 316	2-64, 12-20
3 842 992 417	2-44	3 842 992 963	2-52	3 842 993 148	2-32	3 842 993 317	2-68
3 842 992 418	2-44, 13-17	3 842 992 965	2-17	3 842 993 149	2-32	3 842 993 321	12-25
3 842 992 419	2-44	3 842 992 967	2-35	3 842 993 150	2-32	3 842 993 322	12-25
3 842 992 420	2-44	3 842 992 969	2-39	3 842 993 151	2-32	3 842 993 336	2-60
3 842 992 421	2-44	3 842 992 970	10-9	3 842 993 152	2-34	3 842 993 337	2-60
3 842 992 422	2-44	3 842 992 971	10-9	3 842 993 153	2-34	3 842 993 411	2-58
3 842 992 423	2-44	3 842 992 972	10-9	3 842 993 154	2-34	3 842 993 420	2-20
3 842 992 425	2-35, 10-7	3 842 992 973	10-9	3 842 993 155	2-34	3 842 993 421	2-12
3 842 992 426	2-35	3 842 992 977	10-9	3 842 993 156	2-49	3 842 993 422	2-12
3 842 992 427	2-35	3 842 992 978	10-9	3 842 993 157	2-49	3 842 993 423	2-33
3 842 992 430	2-22	3 842 992 991	2-14	3 842 993 158	2-49	3 842 993 424	2-30
3 842 992 431	2-22	3 842 992 992	2-14	3 842 993 159	2-49	3 842 993 425	8-23
3 842 992 432	2-41, 13-12	3 842 992 999	2-38	3 842 993 160	2-49	3 842 993 426	8-23
3 842 992 433	2-41	3 842 993 001	2-38	3 842 993 161	2-49	3 842 993 427	8-26
3 842 992 435	2-41	3 842 993 010	2-18	3 842 993 162	2-49	3 842 993 428	8-26
3 842 992 436	2-41	3 842 993 011	2-19	3 842 993 163	2-49	3 842 993 429	8-26
3 842 992 437	2-41	3 842 993 012	2-19	3 842 993 164	2-49	3 842 993 430	8-26
3 842 992 438	13-17/18	3 842 993 013	2-37	3 842 993 165	2-49	3 842 993 431	12-25
3 842 992 440	13-24/25	3 842 993 014	2-37	3 842 993 166	2-49	3 842 993 432	12-25
3 842 992 441	13-38/39	3 842 993 015	2-37	3 842 993 167	2-49	3 842 993 434	2-47
3 842 992 443	2-51	3 842 993 016	2-20	3 842 993 168	2-49	3 842 993 435	2-47
3 842 992 444	2-51	3 842 993 017	2-54	3 842 993 169	2-49	3 842 993 436	2-47
3 842 992 445	2-51	3 842 993 018	2-54	3 842 993 170	2-49	3 842 993 449	2-44
3 842 992 446	2-51	3 842 993 019	2-54	3 842 993 171	2-50	3 842 993 450	2-40
3 842 992 447	2-51	3 842 993 020	2-54	3 842 993 172	2-50	3 842 993 489	2-69
3 842 992 448	2-51	3 842 993 029	12-28	3 842 993 173	2-50	3 842 993 493	2-12
3 842 992 449	2-51	3 842 993 033	2-22	3 842 993 174	2-50	3 842 993 494	2-12
3 842 992 452	2-41	3 842 993 052	12-42	3 842 993 175	2-50	3 842 993 495	2-12
3 842 992 453	2-41	3 842 993 061	13-7/8	3 842 993 176	2-50	3 842 993 496	2-12
3 842 992 457	2-20	3 842 993 062	13-17/18	3 842 993 177	2-50	3 842 993 497	2-14
3 842 992 458	2-20	3 842 993 071	2-61	3 842 993 178	2-51	3 842 993 498	2-14
3 842 992 459	2-20	3 842 993 072	2-61	3 842 993 179	2-51	3 842 993 499	2-14
3 842 992 460	2-20	3 842 993 073	2-61	3 842 993 180	2-51	3 842 993 500	2-14
3 842 992 462	2-20	3 842 993 077	2-15	3 842 993 181	2-51	3 842 993 501	2-14
3 842 992 463	2-20	3 842 993 078	2-23	3 842 993 182	2-51	3 842 993 511	12-28
3 842 992 473	2-47	3 842 993 079	2-48	3 842 993 183	2-51	3 842 993 512	12-28
3 842 992 474	2-47	3 842 993 080	13-31/32	3 842 993 184	2-29	3 842 993 621	2-45

3 842 993 628	2-45
3 842 993 635	2-41
3 842 993 644	2-41
3 842 993 653	2-33
3 842 993 654	2-31
3 842 993 658	2-33
3 842 993 661	2-42
3 842 993 662	2-41
3 842 993 663	2-49
3 842 993 664	2-50
3 842 993 665	2-49
3 842 993 668	2-52
3 842 993 669	2-22
3 842 993 670	2-51
3 842 993 671	2-52
3 842 993 672	2-34
3 842 993 673	2-34
3 842 993 674	2-32
3 842 993 675	2-33
3 842 993 676	2-46
3 842 993 677	2-46
3 842 993 678	2-47
3 842 993 679	2-45
3 842 993 680	2-44
3 842 993 681	2-44
3 842 993 682	2-43
3 842 993 683	2-15
3 842 993 684	2-23
3 842 993 685	2-50
3 842 993 686	2-48
3 842 993 687	2-51
3 842 993 688	2-22
3 842 993 689	2-47
3 842 993 690	2-12
3 842 993 691	2-12
3 842 993 692	2-13
3 842 993 693	2-13
3 842 993 694	2-12
3 842 993 695	2-13
3 842 993 696	2-14
3 842 993 697	2-14
3 842 993 698	2-14
3 842 993 699	2-48
3 842 993 700	2-48
3 842 993 703	2-17
3 842 993 704	2-17
3 842 993 705	2-17
3 842 993 706	2-18
3 842 993 707	2-18
3 842 993 708	2-18
3 842 993 709	2-19
3 842 993 710	2-22
3 842 993 711	2-19
3 842 993 712	2-20
3 842 993 713	2-20
3 842 993 714	2-19
3 842 993 715	2-20
3 842 993 716	2-31
3 842 993 717	2-32
3 842 993 718	2-28
3 842 993 719	2-26
3 842 993 720	2-27
3 842 993 721	2-27
3 842 993 722	2-27
3 842 993 723	2-29
3 842 993 724	2-26
3 842 993 725	2-29
3 842 993 726	2-28
3 842 993 727	2-28
3 842 993 728	2-30
3 842 993 729	2-30
3 842 993 730	2-31
3 842 993 731	2-42
3 842 993 732	2-43
3 842 993 733	2-37
3 842 993 734	2-39
3 842 993 735	2-37
3 842 993 736	2-38
3 842 993 737	2-35
3 842 993 738	2-36
3 842 993 739	2-36
3 842 993 740	2-36
3 842 993 741	2-37
3 842 993 742	2-38
3 842 993 743	2-40
3 842 993 744	2-38
3 842 993 751	2-41
3 842 993 752	2-41
3 842 993 753	2-31
3 842 993 755	2-45
3 842 993 756	2-45
3 842 993 757	2-33
3 842 993 758	2-33
3 842 993 759	2-40
3 842 993 760	2-26
3 842 993 761	2-35
3 842 993 762	2-21
3 842 993 763	2-21
3 842 993 764	2-44
3 842 993 887	16-3
3 842 993 952	13-12/13
3 842 993 966	13-7/8
3 842 993 967	13-12/13
3 842 993 968	13-17/18, 13-24/25
3 842 993 969	13-31/32, 13-38/39
3 842 994 000	12-43
3 842 994 001	12-43
3 842 994 635	12-42
3 842 994 659	13-7, 13-10
3 842 994 662	13-31, 13-36, 13-38, 13-43
3 842 994 702	13-20, 13-27, 13-34, 13-41
3 842 994 711	13-12, 13-15
3 842 994 742	10-6
3 842 994 744	10-7
3 842 994 745	10-7
3 842 994 783	10-6
3 842 994 784	10-7
3 842 994 785	10-7
3 842 994 811	13-48
3 842 994 812	13-48
3 842 994 813	13-48
3 842 994 821	13-17, 13-22, 13-24, 13-29
3 842 994 832	12-38
3 842 994 839	12-36
3 842 994 863	16-4
3 842 994 889	12-39
3 842 994 907	12-40
3 842 994 979	2-85
3 842 994 988	12-29
3 842 994 989	12-29
3 842 995 007	12-31
3 842 995 008	12-29
3 842 995 017	12-31
3 842 995 027	2-64, 12-20
3 842 996 191	2-72
3 842 996 192	2-72
3 842 998 495	13-6
3 842 998 496	13-11
3 842 998 497	13-16
3 842 998 498	13-23
3 842 998 499	13-30
3 842 998 500	13-37
8 981 535 476	12-7
8 981 535 477	12-7
8 981 535 323	12-8
8 981 535 324	12-8
8 981 535 478	12-9
8 981 535 479	12-9
8 981 535 325	12-10
8 981 535 326	12-10
8 981 535 890	12-8/9/10, 12-12
8 981 535 891	12-7, 12-11

Index

A
Accessories for protective equipment 9-1
Adjustment unit 12-45
Air-supply elements 5-1
Angle profile 2-57
Anti-torsion element 3-39
Assembly systems catalog 1-9
Attachment kit for safety switch 10-20
Attachment via coupling 13-46

B
Ball catch 9-8
Base plate
– 120x120 6-11
– 135x135 6-10
– 150x150 6-11
– 270x360 6-10
– Steel 6-8
Bearing pedestal 4-9
Beveling shears 14-7
Bolt connectors 3-57
Bow-shaped handle 8-17
Brackets 2-67, 3-17
– R 3-28
– S 7-8
Bump stop 9-5

C
45° connector 3-50
Cable bracket 11-9
Cable duct
– AL 11-3
– PA 11-2
Cam roller guide LF12C
– Complete axis 13-23
– Components 13-24
Cam roller guide LF12S
– Complete axis 13-16
– Components 13-17
Cam roller guide LF20C
– Complete axis 13-37
– Components 13-38
Cam roller guide LF20S
– Complete axis 13-30
– Components 13-31
Cam roller guide LF6C
– Complete axis 13-11
– Components 13-12
Cam roller guide LF6S
– Complete axis 13-6
– Components 13-7
Cam roller guides LF...C 13-5
Cam roller guides LF...S 13-4
Center shafts 13-47
Central bolt 3-38
Clamp bushing 7-13
Clamping element 10-19
Clamping lever
– For joints 4-11
– For lateral guides 16-13
Clamping profile 2-54
Cloth holder 2-85
Collar screw 3-5
Components
– For ESD applications 17-1, 17-2
– For lateral guides 16-1, 16-2
– For height adjustment 45x45 and 45x60 12-43
Components for sliding door 12-4
Connection elements
– Overview 3-1
– Selection criteria 3-3
Connection piece 5-4
Connection screw fitting M12-1/4" 5-4
Construction of conveyor sections, elements for 12-19
Container mount 2-59
Conveyor media, profiles for the installation of 2-64
Conveyor sections
– Made of SP2 section profiles and accumulation roller chains 12-39
– Made of SP4/R section profiles and accumulation roller chains 12-36
– elements for the construction of 12-19
Conveyor track
– EcoFlow 12-28
– Lean 12-20
– XLean 12-25
Conveyor track made of section profiles and roller elements 12-34
Corner bracket 3-44
Counterbalance 9-2
Cover cap 2-81, 3-38, 3-51, 3-53, 8-24
– Made of diecast zinc 2-81
– With hole 2-81
Cover profiles 2-82
Cover strip profile 7-10
Cross connector 3-59
Cubic connector 3-40

D
Damping ring 6-4
Deflection of the profiles 19-4
Dimensioning of synchronous shafts 13-55
Door handle 8-14
Door handle profile 8-26
Door lock 8-12
– For EcoSafe sliding doors 8-13
– For swing and sliding doors 8-11
– For swing doors 8-16
Doors and fittings 8-1
Double ball stop latch 9-7
Double wheel 6-16
Drilling jigs 14-2
Drive for the linear guides 13-44

E
eShop 2-9
Earthing terminal 10-18
EcoFlow stop gate and return stop 12-31
EcoSafe assembly kit
– Double door 10-16
– Sliding door with superstructure 10-14
– System door 10-12
EcoSafe components for building protective fences 10-4
EcoSafe protective frame 10-6
– Load-bearing capacity data 19-11
EcoSafe sliding door without superstructure 10-15
EcoSafe support
– Load-bearing capacity data 19-11
EcoShape 2-70
EcoSlide 12-6
Edge protector 8-26
Elements
– For manual movement 12-1
– For the construction of conveyor sections 12-19
End connector 3-46
End piece 8-24
ESD applications, components for 17-1, 17-2

F
Feet and wheels 6-1
FiFo station 15-2
Flange 13-45
Flange nut 3-6
Flanged plate 5-3
Flexible grinder for anodized surfaces 14-7
Floor dowels 6-12
Folding door element 8-10
Foot 6-4, 6-12
– AL 6-12
– Stainless steel 6-14
Foundation bracket 3-32
Frame profile
– 22.5x30 2-55
– 22.5x45 2-56

G
Grab container base 2-61
Grab ledge 2, -61

H
Handle bar 9-5
Heavy-duty wheel 6-20
Height adjustment 12-43
Hinge 8-4
– Aluminum 8-6
– Plastic 8-5
– LIFTOFF 8-7
– Detachable 8-8
– Adjustable 8-9

Hinge profile 8-3
Holder
– AL 3-33
– For lateral guide, fixed 16-6
– For lateral guide, variable 16-8

I
Inner bracket 3-13
– R 3-14
Installation elements 11-1

J
Joint
– 30x30 4-3
– 40x40 4-4
– 40x40 support 4-4
– 45x45 4-4
– 45x45 support 4-4
– 60x45 4-6
– 60x60 4-6
Joint 45x45 lockable 4-2
Joints, overview 4-1

L
Lateral guides,
– components for 16-1, 16-2
– profile rails for 16-3
– holders for, fixed 16-6
– holders for, variable 16-8
Lettering clips 2-84
Leveling foot 6-4
Lifting wheel 6-22
Linear guides 13-1
– Sizes, designs, and loads 13-3
– Technical data, LF, layout, assembly 13-49
– Overview 13-2
Load-bearing capacity data
– For EcoSafe protective frame 19-11
– For EcoSafe support 19-11
Load-dependent size selection 13-50
Lock mechanism for double door 10-17
Longitudinal end connection 5-5
Longitudinal end connector 3-56
Longitudinal end connector 45 Pneu 5-6

M
Magnet catch 9-6
Manual movement, elements for 12-1
Material chute 2-61
Material number overview 20-1
Metal bracket 3-31
Miter bracket 3-16
Modular leveling feet 6-2
Mortise lock 8-14
Mounting of surface elements 7-1
Mounting rim profile 7-2
– Cleanroom 7-3
MT*pro* 1-8, 2-9
Multi-slider 12-16

P
Parallel connector 3-11
Pinion 12-18
Planning software 1-8
Planning tool LF-MGE 13-57
Plate 6-6
Profile connection load-bearing capacity 19-6
Profile connector 3-37
Profile finishing 2-8, 2-10
Profiles for the installation of conveyor media 2-64
Profile rails 2-63
– For lateral guides 16-3
Profile slot load-bearing capacity 19-5
Protective barriers and partition walls EcoSafe 10-1
Protective fences, EcoSafe components for construction of 10-4
Protective grille profiles 7-12, 10-8
Protective pane profile
– PVC 7-4
– Cleanroom 7-5
Proximity switch
– Ø 6.5 x 30 mm 18-8
– M12x50 18-9

Q
Quick connector
– Bendable: end–slot 3-55
– Bendable: end–end 3-54
– Slot 6 mm, 0°, 90° 3-51
– Slot 8/10 mm, 0° 3-52
– Slot 8/10 mm, 90° 3-53
Quick & Easy 2-9
Quick-lock 11-10

R
Rack 12-18
Radial compensation 2-83
Rectangular tube 2-53
Refill end-pieces 2-61
Retainer ring 7-9
Roller 6-17
– With mounting flange 6-23
Round tube D28 2-67
Rubber profile 2-85

S
Safety catch 9-4
Safety handle 8-18
Safety kit, Safety Strip 10-10
Safety switch, attachment kit for 10-20
Seal 5-6
Sealing profile 8-20
Sealing strip 8-19
Selection guide
– Rollers 6-18
Slide hanger 12-2
Slider 8-21
Slider
– for surface element 12-3
– for profiles 12-13
Slider, flat lockable 12-11
Sliding block 3-7
– Swivel-in 3-8
Sliding door, components for 12-4
Sliding door profile
– Al 45 8-24
– Al Clip 8-23
– PVC 8-22
Slotted plate 30x100 2-60
Software 1-8
Spring 3-9
Spring clamping element 10-21
Spring hook 12-2
Standards for protective equipment 10-2
Star knob 4-11
Steel bracket 3-30
Straddling nut 3-10
Strut profile D28x55 2-67
Strut profiles 2-2
– With slot 6 mm, modular dimension 20 mm 2-11
– With slot 8 mm, modular dimension 30 mm 2-16
– With slot 10 mm 2-24
– With slot 10 mm, modular dimension 40 mm 2-26
– With slot 10 mm, modular dimension 45 mm 2-35
– With slot 10 mm, modular dimension 50 mm 2-49
– With slot 10 mm, modular dimension 60 mm 2-51
– Slot sizes and modular dimensions 2-3
– Technical data 19-2
– Overview 2-1
Stop 18-10
Support rollers 12-17
Supporting arm joint 4-8
Supporting brackets 3-31
– AL 3-35
– AL, lateral 3-36
Surface elements, mounting of 7-1
Suspension bracket 10-10
Suspension piece for frames 10-22
Suspension profile 2-58
Switch bracket
– SH 1/S 18-2
– SH 1/U 18-3
– SH 2/S 18-4
– SH 2/S-H 18-5
– SH 2/ST 18-4
– SH 2/U 18-6
– SH 2/U-H 18-7
Swivel bearing 4-7

Swivel fastening, 180° 4-10
Synchronous shafts 13-47

T
T-bolt 3-6
T-connectors
– Profiles 2-67
– Connecting elements 3-48
– 45 Pneu 5-6
T-nut 3-4
Technical data 19-1
– Profiles 2-4
– LF, layout, assembly 13-49
– Strut profiles 19-2
Tensioning connector 3-12
Threaded sleeve 6-7
Tilt lever 10-11
Tool holder 14-8
Tool shelf 14-8
Tools 14-1
Torx® offset screwdriver 14-6
Trolley 2-63

U
Universal plate 7-11

V
Variofix block 7-6
Variofix block S 7-7
Variofix remover 14-7

W
Washer 6-12

Notes

Quick & Easy profile finishes

Logical structure of the order key

Material number / length / [slot designation = finishing; parameter set]

Example: **Profile 45x90L with through-hole D17 in slot B**

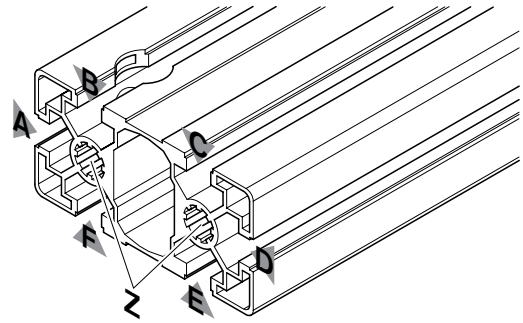

3 842 993 662	/ 393	/ B = D17/-
Material number	Length	Standard profile finishes D17 through-hole in slot B

Standard profile finishes

▶ Through-hole drilling	D
▶ Blind hole drilling	DB
▶ Thread cutting	M
▶ Standard milling	F1

Customized profile finishes

▶ Hole drilling	DI
▶ Drilling sequence	DIS
▶ Cross milling	MT
▶ Cross milling sequence	MTS
▶ Lengthwise milling	MI
▶ Lengthwise milling sequence	MIS
▶ Miter cutting	S1 / S3

You can configure your profile really quickly and easily in the Rexroth eShop or with the profile configurator in MT*pro*

Easy configuration in the eShop or with MT*pro*
www.boschrexroth.com/shop

Standard profile finishes

Order syntax for through-holes, blind holes, standard milling

Material number / length / slot designation = finishing at profile start / finishing at profile end; ...

Order syntax for threads

Material number / length / Z = Mx at profile start / Mx at profile end

Standard profile finishes

		Slot 6 mm	Slot 8 mm	Slot 10 mm
Through-hole for corner connections with central bolt		**D5.8** 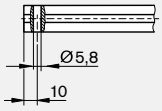	**D7.8** 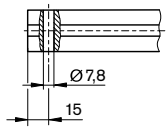	**D9.8** 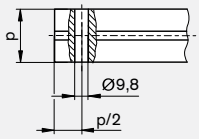
Through-hole for bolt connectors and quick connectors		**D8** 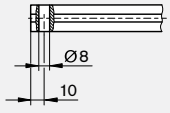	**D11** 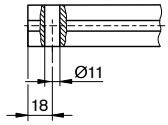	**D17** 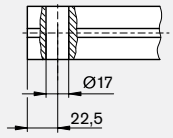
Blind hole for longitudinal end connectors and quick connectors in closed profiles	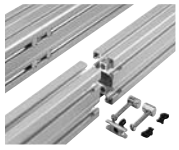	**DB8** 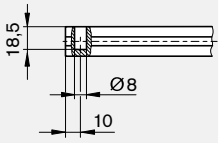	**DB11** 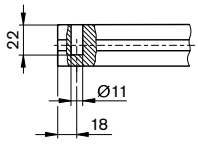	**DB17** 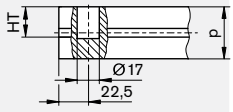 **p** 40 45 50 60 **HT** 31 34 36 41
Thread in all central holes for accessories		**M6** 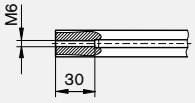	**M8** 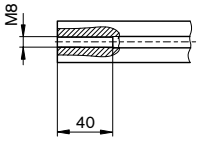	**M12** 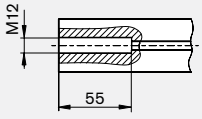 **M16** 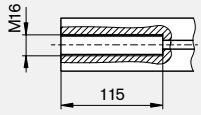
Standard milling for cross connectors				**F1** 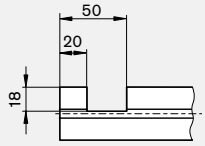

Minimum profile lengths (mm) for standard profile finishes on one or both sides

6	–	M6	D5.8	D8/ DB8
–	50	50	50	50
M6	50	70	50	70
D5.8	50	50	50	50
D8/ DB8	50	50	50	50

8	–	M8	D7.8	D11/ DB11
–	50	50	50	50
M8	50	80	62	70
D7.8	50	62	60	50
D11/ DB11	50	70	50	60

10	–	M12	M16	D9.8	D17/ DB17	F1
–	50	60	120	50	60	60
M12	60	110	180	90	60	110
M16	120	180	240	150	170	170
D9.8	50	90	150	80	70	90
D17/ DB17	60	90	150	70	80	90
F1	60	110	170	90	90	80

Notice: In the case of clashes with the values in the order table, the larger value applies.

Easy configuration in the eShop or with MTpro
www.boschrexroth.com/shop

Drilling DI, drilling sequence DIS

Material number / length / [slot designation=DI; PS=...; *OS=...;* **DM=...;** *HT=...***]**; *[...]*
Material number / length / [slot designation=DIS; PS=....; *OS=...;* **DM=...;** *HT=...;* **SN=...; SD=...]**; *[...]*

End finishing	Parameter		Order example for profile 45x90L
Hole **DI** 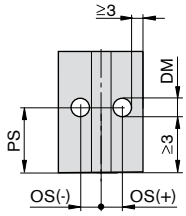	**PS**	Center point of hole PS_{min} = DM/2 + 3 mm; PS_{max} = L - (DM/2 + 3 mm)	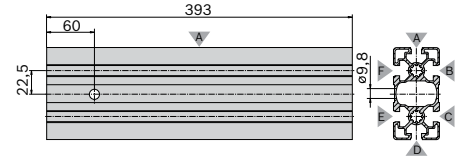
	OS	Offset start point (optional) Select OS so that the hole does not cut through any slot edges	
	DM	DM hole diameter DM; see table.	**3 842 993 662** / 393 / [B=DI; PS=60; OS=22.5; DM=9.8]
	HT	Depth of hole (optional) Through-holes made if no information provided HT_{max} see table	
Drilling sequence **DIS** 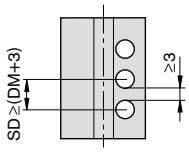	**PS,** *OS,* **DM, HT**	As for DI hole drilling	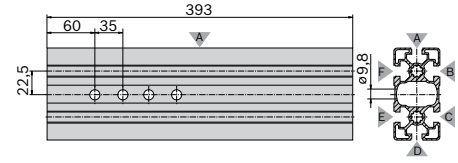
	SN	Number of finishes SN_{max} = INT((L - 3 - PS - DM/2) / SD) + 1	
	SD	Distance between adjacent finishes SD_{min} = DM + 3	**3 842 993 662** / 393 / [B=DIS; PS=60; OS=22.5; DM=9.8; SN=4; SD=35]

Permissible hole diameters, permissible hole depths (in mm)								
DM	5.8	6.4	7.8	8.0	8.4	9.8	11.0	17.0
HT_{max}	40.0	45.0	45.0	45.0	45.0	50.0	60.0	75.0

ATTENTION: If HT_{max} is not sufficient to drill through the profile, you must order two opposite bores!

Cross milling MT, cross milling sequence MTS

Material number / length / [slot designation=MT; PS=...; HT=...; PE=...]; *[...]*
Material number / length / [slot designation=MTS; PS=...; HT=...; PE=...; SN=...; SD=...]; *[...]*

End finishing	Parameter		Order example for profile 45x90L
Cross milling **MT** 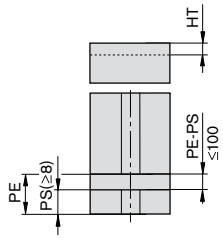	**PS**	Starting point of milling PS_{min} = 8 mm; PS_{min} = 60 mm on the underside of the profile	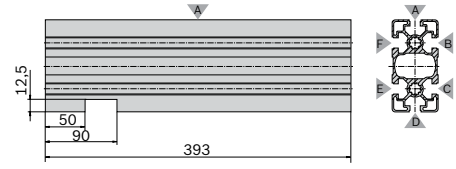
	HT	Depth of milling HT_{max} = 5.5 mm (slot 6 mm) HT_{max} = 9.0 mm (slot 8 mm) HT_{max} = 12.5 mm (slot 10 mm)	
	PE	End point of milling PE_{max} = L - 8 mm; 8 mm ≤ PE - PS ≤ 100 mm	**3 842 993 662** / 393 / [D=MT; PS=50; HT=12,5; PE=90]
Cross milling sequence **MTS** 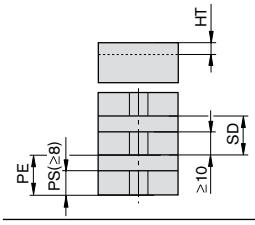	**PS, HT, PE**	As for cross milling MT	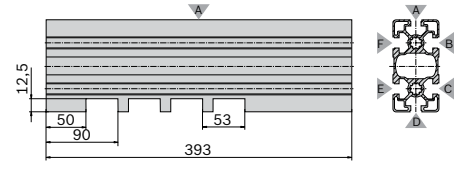
	SN	Number of finishes SN_{max} = INT((L - 8 - PE) / SD) +1	
	SD	Distance between adjacent finishes SD_{min} = (PE - PS) + 10	**3 842 993 662** / 393 / [D=MTS; PS=50; HT=12.5; PE=90; SN=4; SD=53]

Lengthwise milling MI, lengthwise milling sequence MIS

Material number / length / [slot designation=MI; PS=...; *OS=...;* **DM=...; HT=...; PE=...; RG=...]***; [...]*
Material number / length / [slot designation=MIS; PS=...; *OS=...;* **DM=...; HT=...; PE=...; RG=...; SN=...; SD=...]***; [...]*

End finishing	Parameter		Order example for profile 45x90L
Lengthwise milling **MI** 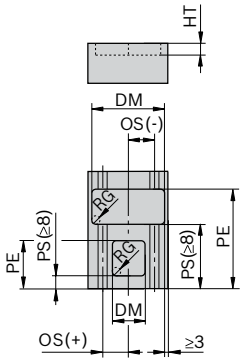	**PS**	Starting point of milling PS_{min} = 8 mm PS_{min} = 60 mm on the underside of the profile (see order tables for guidance)	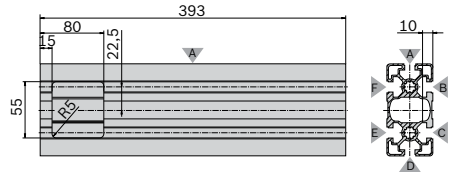
	OS	Offset starting point (optional)	
	DM	Milling width DM_{min} = 8 mm; DM_{max} = profile width/height - 6 mm At least 3 mm of profile must remain on both sides	**3 842 993 662** / 393 / [B=MI; PS=15; OS=22.5; DM=55; HT=10; PE=80; RG=5]
	HT	Depth of milling. HT_{max} = 5.5 mm (slot 6 mm) HT_{max} = 9.0 mm (slot 8 mm) HT_{max} = 12.5 mm (slot 10 mm)	
	PE	End point of milling PE_{max} = L - 8 mm 8 mm ≤ PE - PS ≤ 100 mm	
	RG	Radius of milling geometry RG = 3 mm; 4 mm; 5 mm; 8 mm	
Lengthwise milling sequence **MIS** 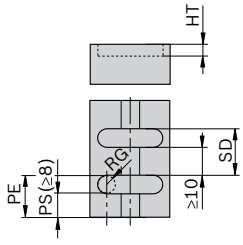	**PS,** *OS,* **DM, HT, PE, RG**	As for lengthwise milling MI	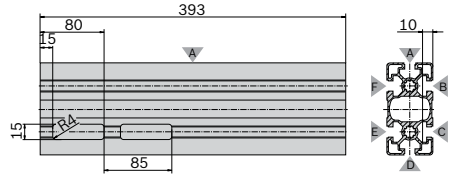
	SN	Number of finishes SN_{max} = INT(L - 8 - PE / SD) + 1	
	SD	Distance between adjacent finishes SD_{min} = (PE - PS) + 10	**3 842 993 662** / 393 / [C=MIS; PS=15; DM=15; HT=10; PE=80; RG=4; SN=2; SD=85]

Miter cutting

Material number / length/[FS=side; DG=miter angle]*; [BS=side; DG=miter angle]*

End finishing	Parameter		Order example for profile 45x90L
Miter cutting 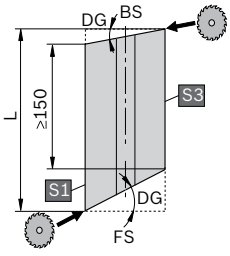	**FS**	Front side S1, S3 – profile side on which the miter cut begins	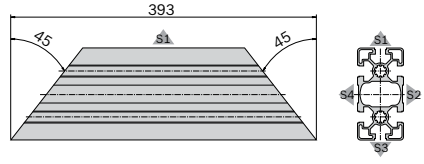
	BS	Back side S1, S3 – profile side on which the miter cut begins	
	DG	Miter bracket DG > 0 The angle is always specified as a positive value. Note the maximum permissible miter angle (see order tables)	**3 842 993 662** / 393 / [FS=S3; DG=45]; [BS=S3; DG=45]

Bosch Rexroth AG
Postfach 30 02 07
70442 Stuttgart, Deutschland
www.boschrexroth.com

You can find local contact information at:
www.boschrexroth.com/contact

3 842 540 392 (2015-09)
© Bosch Rexroth AG 2015
Subject to modifications!

The information in this document is intended solely to describe the products. Due to the continuous development of our products, no statements concerning a specific characteristic or suitability for a specific application can be inferred from the information that we provide. The information provided does not release the user from the need to undertake his own evaluations and tests/checks. Please note that our products are subject to a natural aging and wear process.