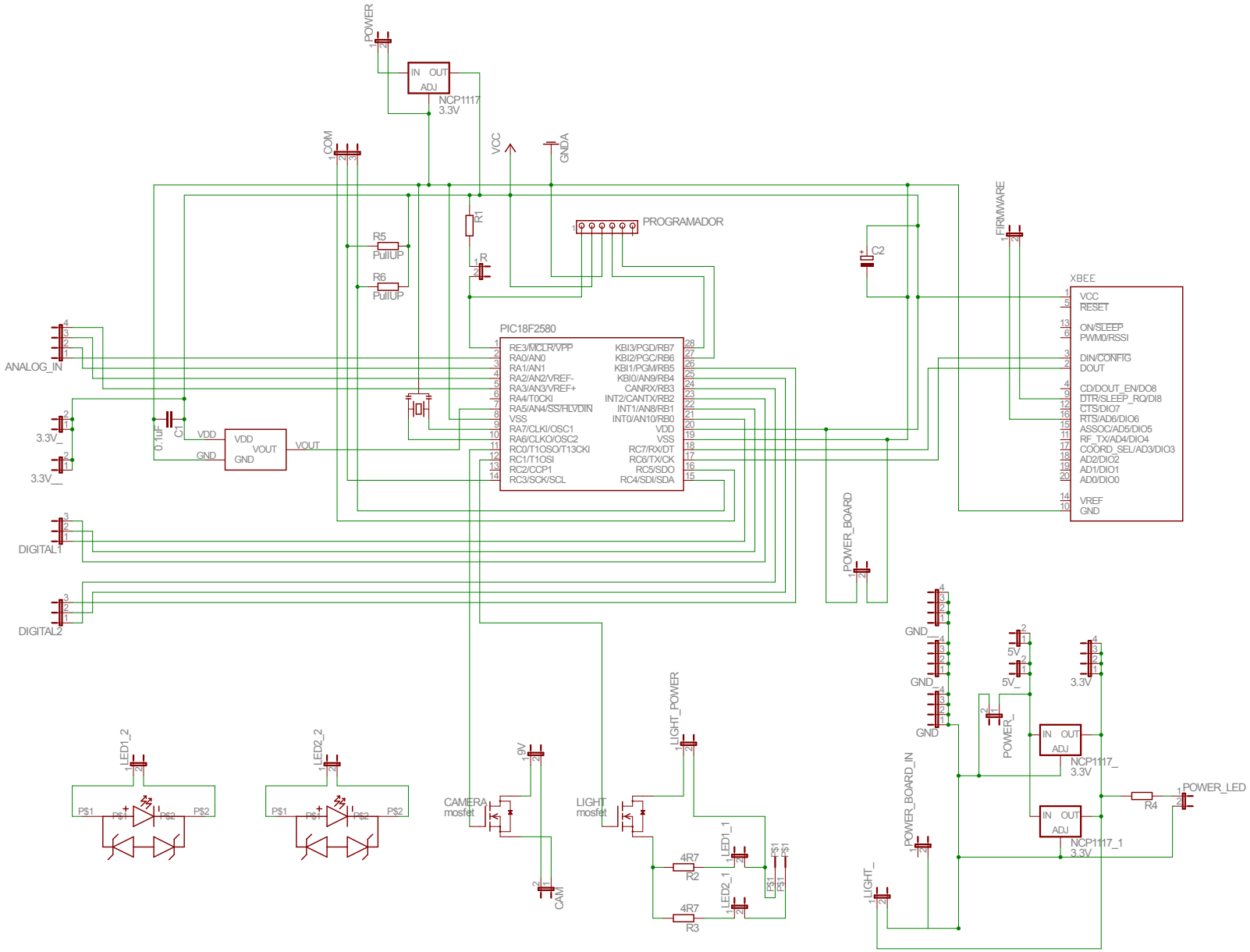
POWER
IN OUT
ADJ
NCP1117
3.3V
COM
VCC
GNDA
R1
R
R5
PullUP
R6
PullUP
PROGRAMADOR
C2
FIRMWARE
XBEE
VCC
RESET
ON/SLEEP
PWM0/RSSI
DIN/CONFIG
DOUT
CD/DOUT_EN/DO8
DTR/SLEEP_RQ/DI8
CTS/DIO7
RTS/AD6/DIO6
ASSOC/AD5/DIO5
RF_TX/AD4/DIO4
COORD_SEL/AD3/DIO3
AD2/DIO2
AD1/DIO1
AD0/DIO0
VREF
GND
PIC18F2580
RE3/MCLR/VPP
RA0/AN0
RA1/AN1
RA2/AN2/VREF-
RA3/AN3/VREF+
RA4/T0CKI
RA5/AN4/SS/HLVDIN
VSS
RA7/CLKI/OSC1
RA6/CLKO/OSC2
RC0/T1OSO/T13CKI
RC1/T1OSI
RC2/CCP1
RC3/SCK/SCL
KBI3/PGD/RB7
KBI2/PGC/RB6
KBI1/PGM/RB5
KBI0/AN9/RB4
CANRX/RB3
INT2/CANTX/RB2
INT1/AN8/RB1
INT0/AN10/RB0
VDD
VSS
RC7/RX/DT
RC6/TX/CK
RC5/SDO
RC4/SDI/SDA
ANALOG_IN
3.3V_
3.3V__
0.1uF
C1
VDD
VOUT
GND
VDD
VOUT
GND
DIGITAL1
DIGITAL2
POWER_BOARD
GND
GND
GND
5V
5V_
3.3V
POWER_
IN OUT
ADJ
NCP1117_
3.3V
IN OUT
ADJ
NCP1117_1
3.3V
R4
POWER_LED
POWER_BOARD_IN
LIGHT_
LED1_2
LED2_2
P$1
P$2
P$1
P$2
9V
CAMERA
mosfet
CAM
LIGHT_POWER
LIGHT
mosfet
4R7
R2
4R7
R3
LED1_1
LED2_1
P$1
P$1
P$1
P$1